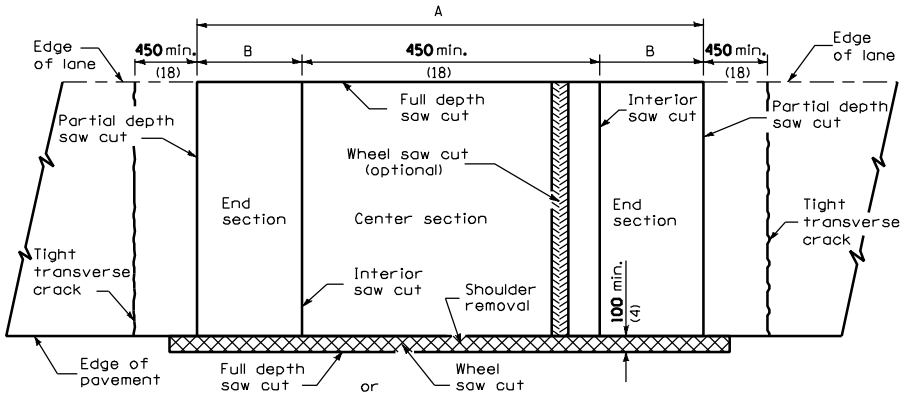

PAVEMENT SAWING DETAIL

(BITUMINOUS SHOULDER)

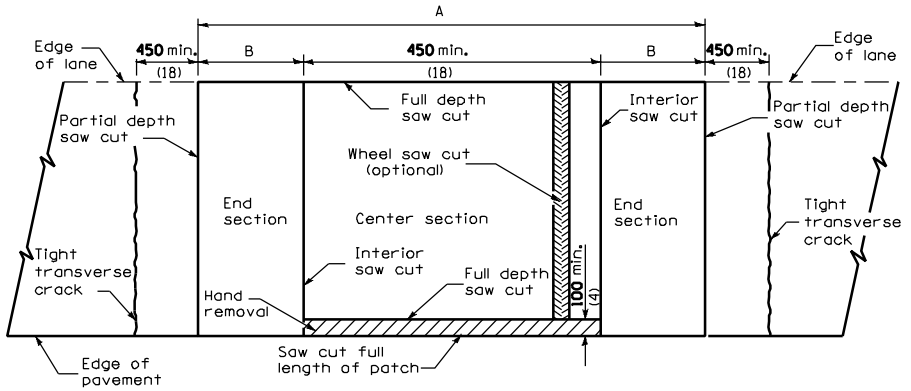

PAVEMENT SAWING DETAIL

(PCC SHOULDER)

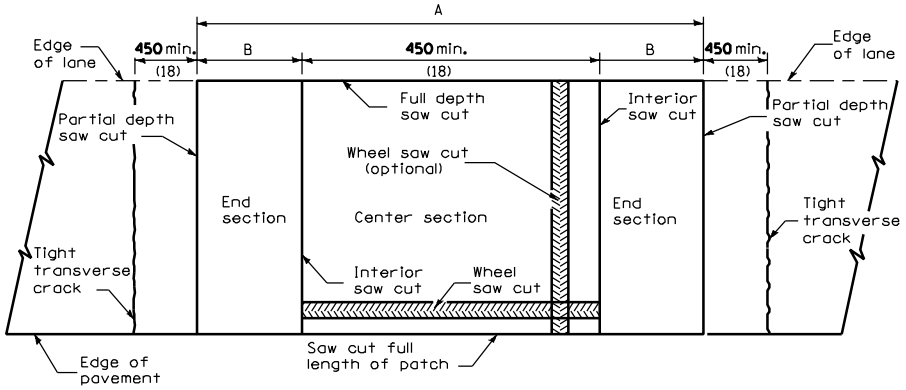

ALTERNATE SAWING DETAIL

(PCC SHOULDER)

EXISTING REINFORCEMENT BARS	A (min.)	B (min.)	C (min.)
No. 15 (No. 5)	**1.4 m** (4'-6")	**450** (18)	**400** (16)
No. 20 (No. 6)	**1.5 m** (5'-0")	**525** (21)	**475** (19)
No. 25 (No. 7)	**1.7 m** (5'-6")	**600** (24)	**550** (22)
Fabric	**1.5 m** (5'-0")	**525** (21)	**450** (18)

GENERAL NOTES

When patching two adjacent lanes in one operation, the longitudinal joint shall be a sawed longitudinal joint as detailed on Standard 420001; however, the groove shall be either preformed or sawed. Tie bars shall only be included for patches 6.0 m (20') or longer.

All dimensions are in millimeters (inches) unless otherwise shown.

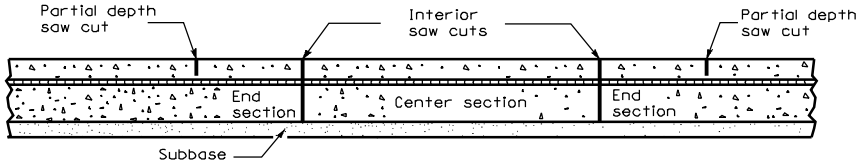

SAW CUT DETAIL

DATE	REVISIONS
1-1-98	Added PCC shoulder sawing details.
1-1-97	Renum. Standard 2425-6. Rev. bar sizes. Rev. metric dim.

CLASS A PATCHES

(Sheet 1 of 2)

STANDARD 442001-01

Illinois Department of Transportation

PASSED January 1, 1998
ENGINEER OF POLICY AND PROCEDURES

APPROVED January 1, 1998
ENGINEER OF DESIGN AND ENVIRONMENT

ISSUED 1-1-97

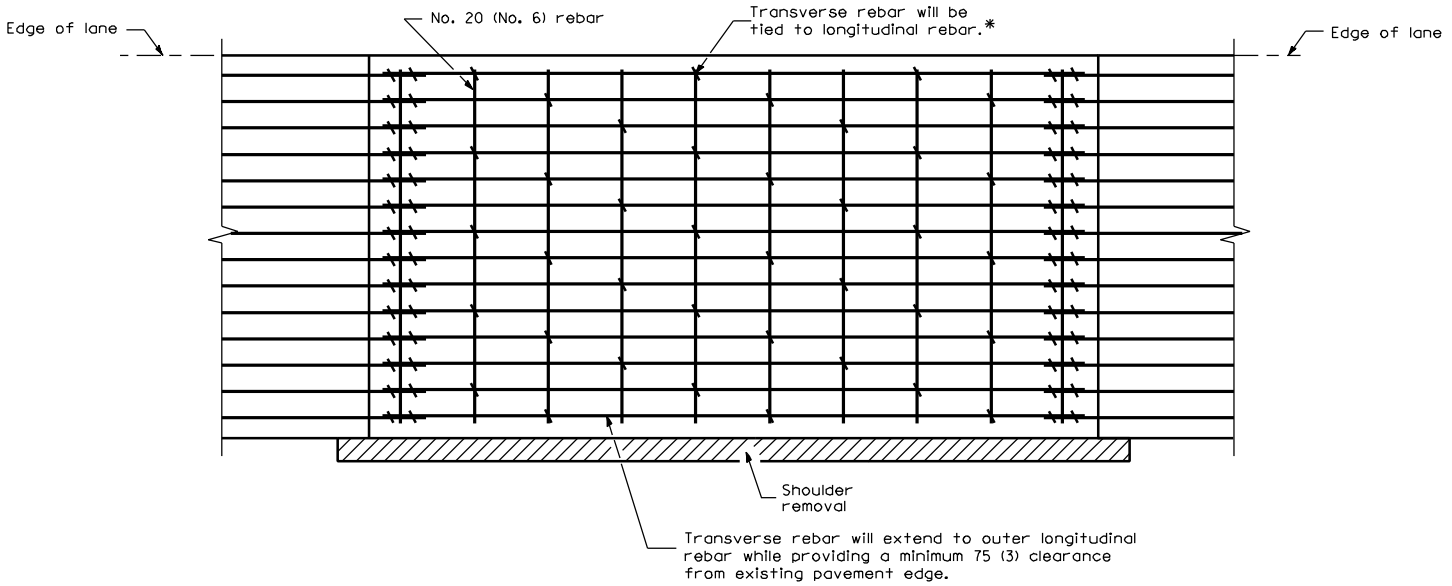

PAVEMENT REINFORCEMENT DETAIL

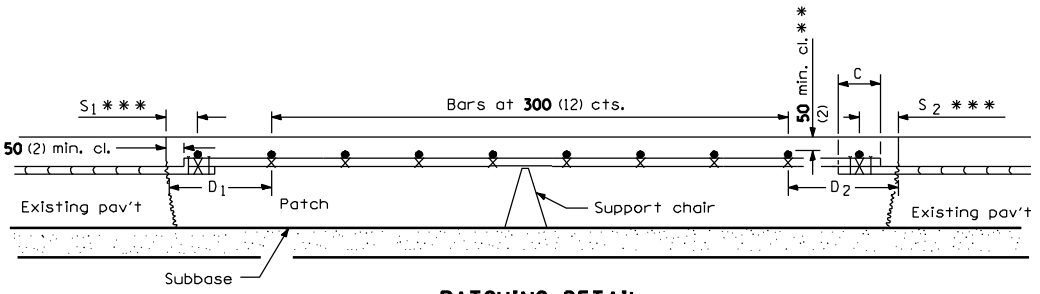

PATCHING DETAIL

* Every 3rd intersection must be tied.

** When the minimum clearance cannot be obtained with the transverse bar on top then the transverse rebar shall be tied to the bottom of the longitudinal rebar.

*** Variable: Where S_1 and S_2 are **65** (2½) min. and **300** (12) max. $D_1 = 2(S_1)$ and $D_2 = 2(S_2)$.

All dimensions are in millimeters (inches) unless otherwise shown.

Illinois Department of Transportation

PASSED January 1, 1998
ENGINEER OF POLICY AND PROCEDURES

APPROVED January 1, 1998
ENGINEER OF DESIGN AND ENVIRONMENT

ISSUED 1-1-97

CLASS A PATCHES

(Sheet 2 of 2)

STANDARD 442001-01

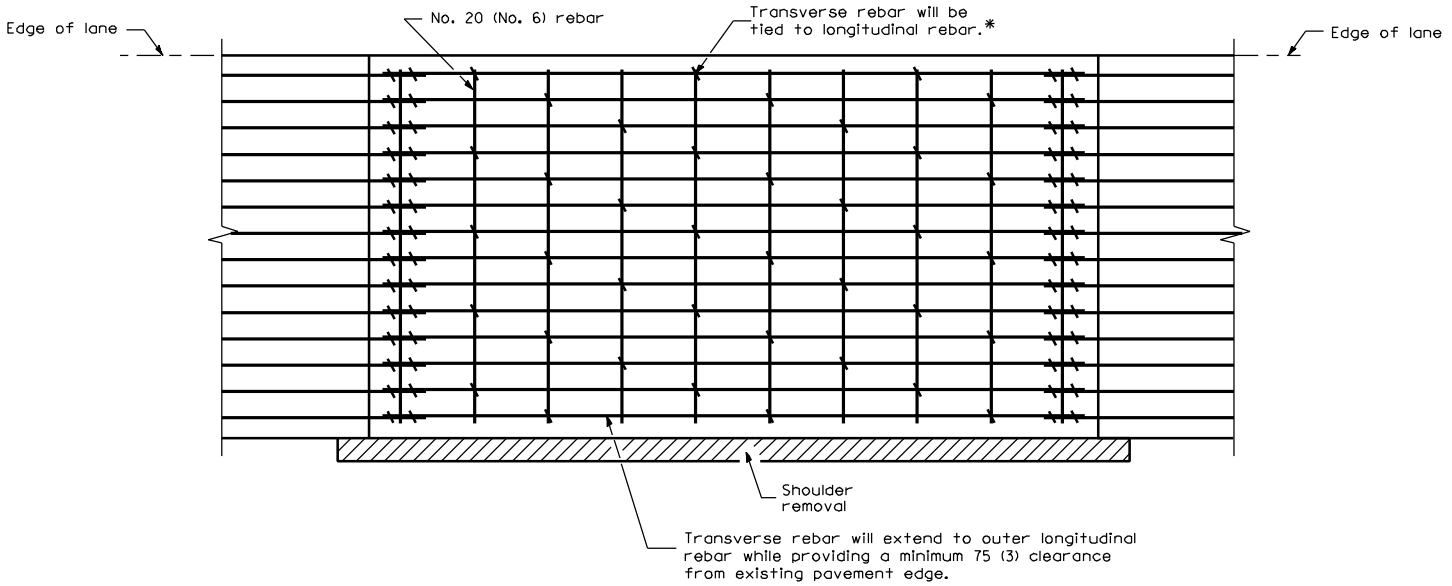

PAVEMENT REINFORCEMENT DETAIL

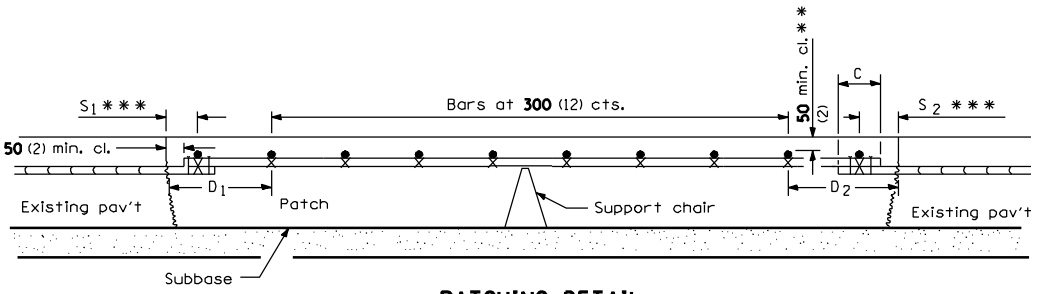

PATCHING DETAIL

* Every 3rd intersection must be tied.

** When the minimum clearance cannot be obtained with the transverse bar on top then the transverse rebar shall be tied to the bottom of the longitudinal rebar.

*** Variable: Where S_1 and S_2 are **65** (2½) min. and **300** (12) max. $D_1 = 2(S_1)$ and $D_2 = 2(S_2)$.

All dimensions are in millimeters (inches) unless otherwise shown.

Illinois Department of Transportation

PASSED January 1, 1998
ENGINEER OF POLICY AND PROCEDURES

APPROVED January 1, 1998
ENGINEER OF DESIGN AND ENVIRONMENT

ISSUED 1-1-97

CLASS A PATCHES

(Sheet 2 of 2)

STANDARD 442001-01