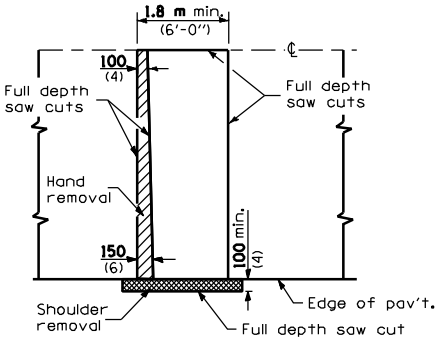

PAVEMENT SAWING DETAIL

(BITUMINOUS SHOULDER)

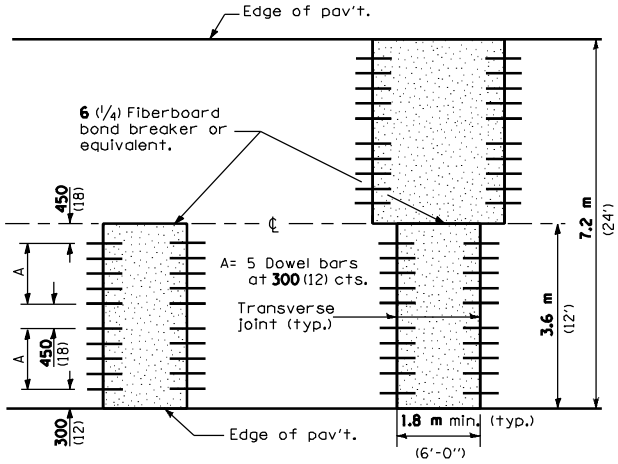

3.6 m (12') WIDE LANES

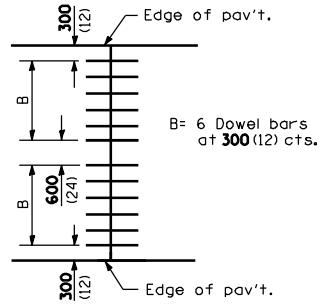

4.2 m (14') WIDE RAMP

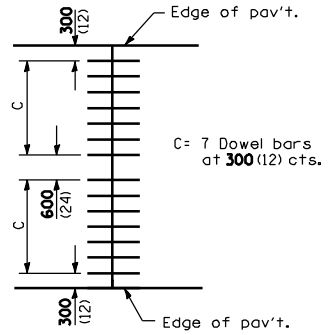

4.8 m (16') WIDE RAMP

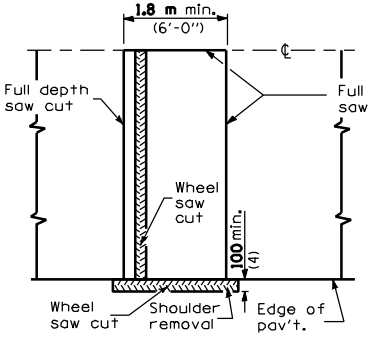

ALTERNATE SAWING DETAIL

(BITUMINOUS SHOULDER)

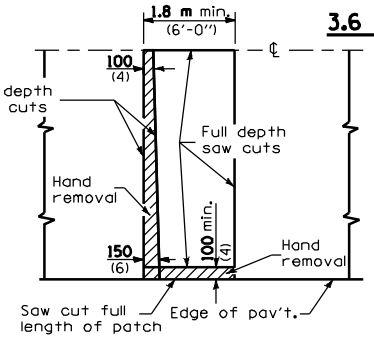

PAVEMENT SAWING DETAIL

(PCC SHOULDER)

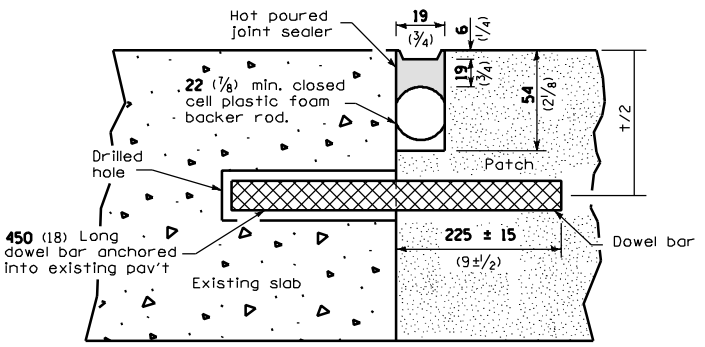

TRANSVERSE JOINT

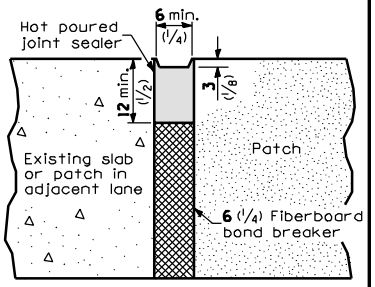

CENTERLINE JOINT

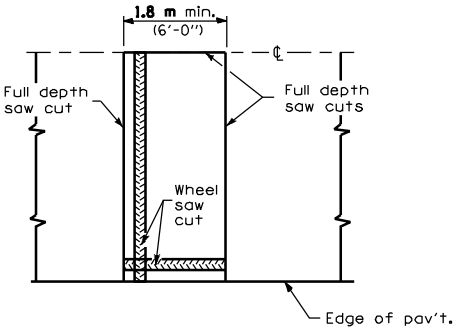

ALTERNATE SAWING DETAIL

(PCC SHOULDER)

TABLE OF BARS

PAVEMENT THICKNESS	DOWEL BAR DIAMETER	HOLE DIAMETER
200 or greater (8)	38 (1 1/2)	41 (1 5/8)
180 thru 199 (7) (7.99)	32 (1 1/4)	35 (1 3/8)
Less than 180 (7)	25 (1)	29 (1 1/8)

NOTE

For Jointed Reinforced PCC Pavements, patches 12 m (40') or longer shall have sawed contraction joints, in accordance with Standard 420001, at 12 m (40') maximum intervals and be in prolongation with joints or cracks in the adjacent lane whenever possible.

All dimensions are in millimeters (inches) unless otherwise shown.

Illinois Department of Transportation

PASSED January 1, 1998
ENGINEER OF POLICY AND PROCEDURES
APPROVED January 1, 1998
ENGINEER OF DESIGN AND ENVIRONMENT
ISSUED 1-1-97

DATE	REVISIONS
1-1-98	Combined Sheets 1 & 2
	to show only dowels
	at joints.
1-1-97	Renum. Standard 2426-4.
	Revised reference to
	non-shrink grout.

CLASS B PATCHES

(Sheet 1 of 2)

STANDARD 442101-01

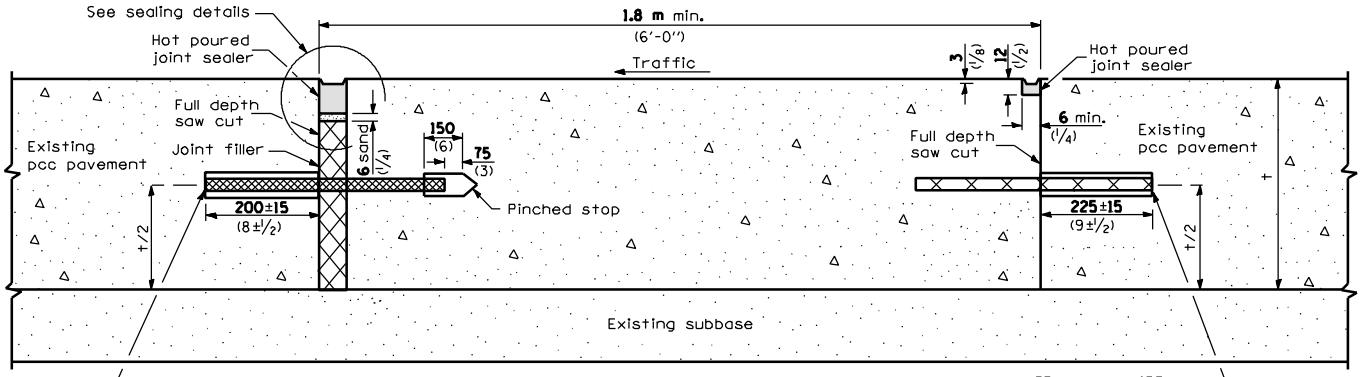

38×450 (1½×18) precoated dowel bars anchored into existing pavement at 300 (12) cts.

No. 35 (No. 10) × 450 (18) Long deformed bars anchored into existing pavement at 300 (12) cts.

METHOD I
(NO RS)

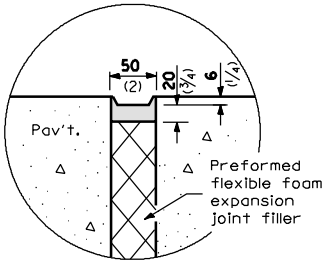

SEALING DETAIL

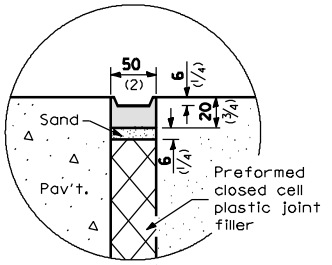

SEALING DETAIL

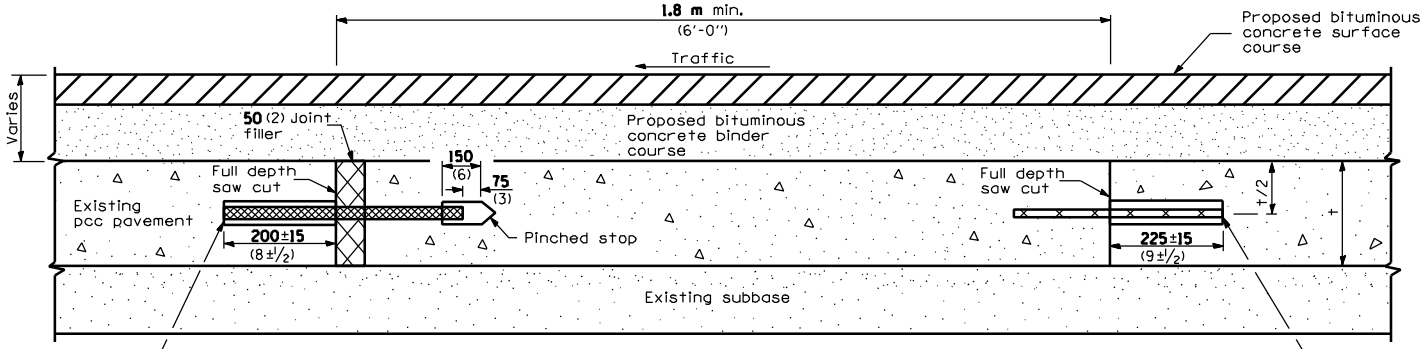

38×450 (1½×18) precoated dowel bars anchored into existing pavement at 300 (12) cts.

No. 35 (No. 10) × 450 (18) Long deformed bars anchored into existing pavement at 300 (12) cts.

METHOD II
(WITH RS)

All dimensions are in millimeters (inches) unless otherwise shown.

Illinois Department of Transportation

PASSED January 1, 1998
ENGINEER OF POLICY AND PROCEDURES
APPROVED January 1, 1998
ENGINEER OF DESIGN AND ENVIRONMENT

ISSUED 1-1-97

CLASS B PATCHES
(EXPANSION JOINTS)
(Sheet 2 of 2)

STANDARD 442101-01