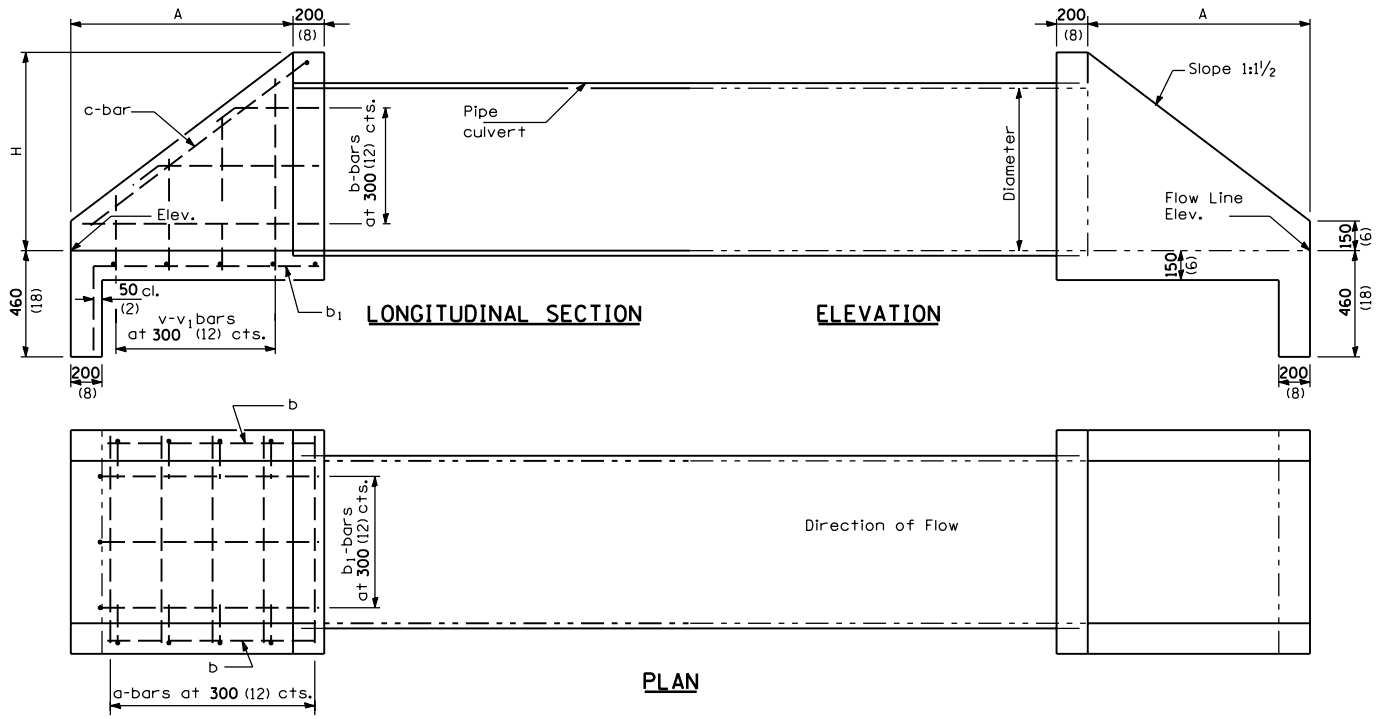

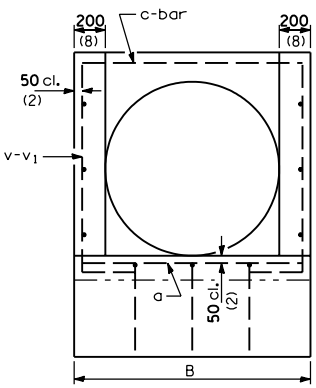

END ELEVATION

PIPE DIA. (NOM.)	A	B	H	Reinforcing Steel No. 15 bars (No. 4) a	b	b_1	c	v	v_1	Concrete 2 End Secs. m^3 (cu. yds.)	Reinf. Bars 2 End Secs. kg (lbs.)
300 (12)	460 (18)	710 (28)	460 (18)	4 @ 610 4 @ (24)	4 @ 540 4 @ (21)	4 @ 790 4 @ (31)	2 @ 1.75 m 2 @ (5'-9")	4 @ 760 4 @ (30)	4 @ 530 4 @ (21)	.45 (.59)	30 (40)
375 (15)	570 (24)	780 (31)	535 (21)	4 @ 690 4 @ (27)	4 @ 690 4 @ (27)	4 @ 990 4 @ (39)	2 @ 2.13 m 2 @ (7'-0")	4 @ 840 4 @ (33)	4 @ 610 4 @ (24)	.59 (.77)	30 (40)
450 (18)	685 (27)	860 (34)	610 (24)	6 @ 760 6 @ (30)	8 @ 760 8 @ (30)	4 @ 1.07 m 4 @ (3'-6")	2 @ 2.44 m 2 @ (8'-0")	4 @ 910 4 @ (36)	4 @ 690 4 @ (27)	.70 (.92)	40 (60)
600 (24)	915 (36)	1.01 m (3'-4")	760 (30)	6 @ 910 6 @ (36)	8 @ 990 8 @ (39)	6 @ 1.2 m 6 @ (4'-3")	2 @ 3.2 m 2 @ (10'-6")	8 @ 1.07 m 8 @ (3'-6")	4 @ 760 4 @ (30)	1.01 (1.32)	60 (90)
750 (30)	1.14 m (3'-9")	1.16 m (3'-10")	915 (36)	8 @ 1.07 m 8 @ (3'-6")	12 @ 1.22 m 12 @ (4'-0")	6 @ 1.52 m 6 @ (5'-0")	2 @ 3.81 m 2 @ (12'-6")	8 @ 1.22 m 8 @ (4'-0")	4 @ 910 4 @ (36)	1.37 (1.79)	80 (120)
900 (36)	1.37 m (4'-6")	1.32 m (4'-4")	1.07 m (3'-6")	10 @ 1.22 m 10 @ (4'-0")	12 @ 1.45 m 12 @ (4'-9")	6 @ 1.75 m 6 @ (5'-9")	2 @ 4.57 m 2 @ (15'-0")	8 @ 1.37 m 8 @ (4'-6")	8 @ 1.07 m 8 @ (3'-6")	1.85 (2.33)	110 (150)
1200 (48)	1.83 m (6'-0")	1.62 m (5'-4")	1.37 m (4'-6")	12 @ 1.52 m 12 @ (5'-0")	16 @ 1.9 m 16 @ (6'-3")	8 @ 2.21 m 8 @ (7'-3")	2 @ 5.87 m 2 @ (19'-3")	12 @ 1.52 m 12 @ (5'-0")	8 @ 1.07 m 8 @ (3'-6")	2.80 (3.6)	170 (230)

DESIGN DATA

GENERAL NOTES

All slope ratios are expressed as units of vertical displacement to units of horizontal displacement (V:H).

All dimensions are in millimeters (inches) unless otherwise shown.

Illinois Department of Transportation

APPROVED January 1, 1997
Ralph E. Anderson
ENGINEER OF BRIDGES AND STRUCTURES

APPROVED January 1, 1997
Gary Hamdorf
ENGINEER OF DESIGN AND ENVIRONMENT

ISSUED 1-1-97

DATE	REVISIONS
1-1-97	Renum. Standard 1564-1.
6-15-94	Added metric and slope note.

REINFORCED CONCRETE END SECTIONS WITH PARALLEL WINGWALLS FOR PIPE CULVERTS 300 mm (12") THRU 1200 mm (48") DIA. AT RIGHT ANGLES WITH ROADWAY

STANDARD 542001