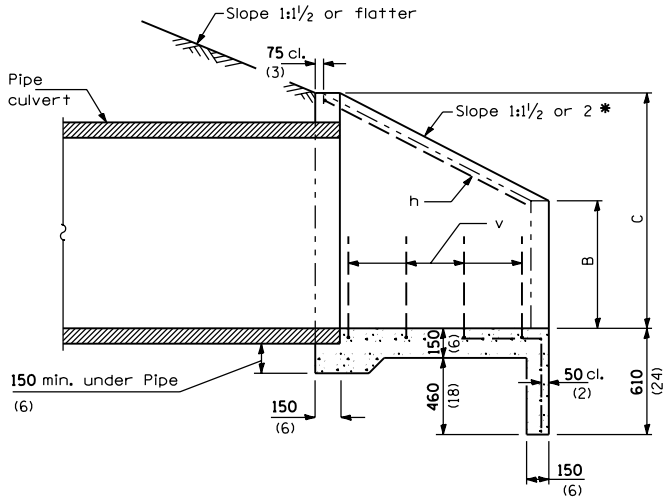

SECTION A-A

Mark	a	b
h	560 (22)	750 (29½)
h_1	560 (22)	980 (38½)
h_2	640 (25)	750 (29½)
h_3	640 (25)	980 (38½)
h_4	840 (33)	990 (39)
h_5	840 (33)	1.26 m (4′-1½″)
h_6	990 (39)	1.18 m (3′-10½″)
h_7	990 (39)	1.50 m (4′-10½″)
h_8	1.19 m (3′-11″)	1.42 m (4′-8″)
h_9	1.19 m (3′-11″)	1.77 m (5′-9½″)

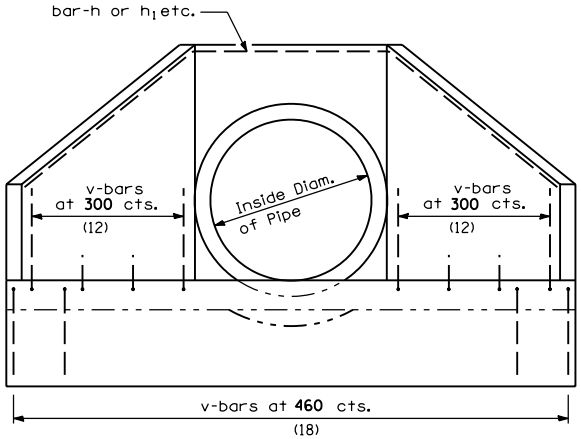

END VIEW

BAR v

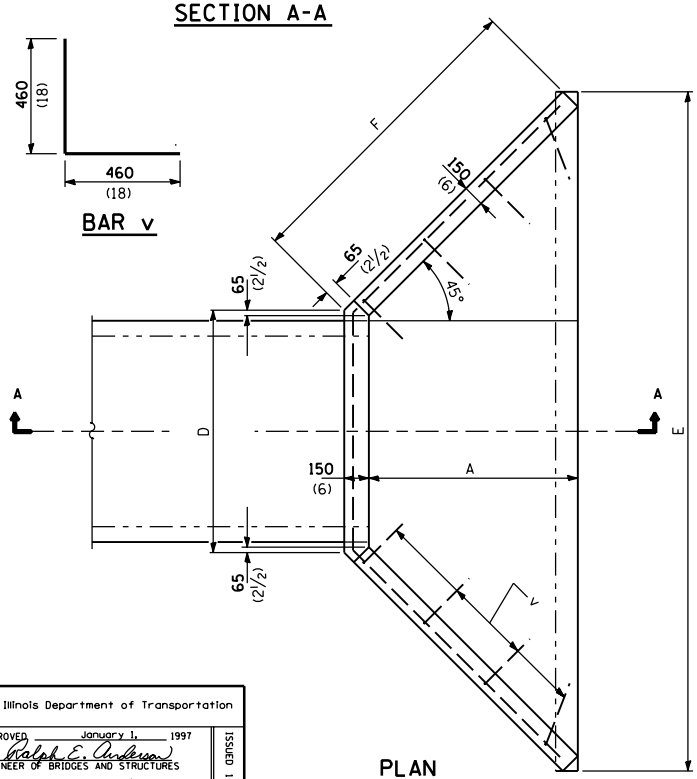

PLAN

TABLE OF DIMENSIONS

DESIGN NO.	NOMINAL INSIDE DIAM. of PIPE	SLOPE of FILL	Dimensions A	B	C	D	E	F	Concrete 2 End Secs. m^3 (cu. yds.)	Reinforcement Bars -No. 15 (No. 4) h-Bars Mark	Length	v-Bars No.	Total Wt. 2 End Secs. kg (lbs.)
D375-1½ (D15-1½)	375 (15)	1:1½	485 (19)	260 (10)	590 (23)	610 (24)	1.67 m (5′-5½″)	750 (29½)	0.7 (0.9)	h	2.06 m (6′-9″)	16	30 (40)
D375-2 (D15-2)	375 (15)	1:2	660 (26)	260 (10)	590 (23)	610 (24)	2.02 m (6′-7½″)	1 m (3′-3¼″)	0.9 (1.2)	h_1	2.52 m (8′-3″)	22	40 (60)
D450-1½ (D18-1½)	450 (18)	1:1½	485 (19)	330 (13)	660 (26)	690 (27)	1.75 m (5′-8½″)	750 (29½)	1.0 (1.3)	h_2	2.14 m (7′-0″)	16	30 (40)
D450-2 (D18-2)	450 (18)	1:2	660 (26)	330 (13)	660 (26)	690 (27)	2.11 m (6′-10½″)	1 m (3′-3¼″)	1.0 (1.3)	h_3	2.6 m (8′-6″)	22	40 (60)
D600-1½ (D24-1½)	600 (24)	1:1½	640 (25)	410 (16)	840 (33)	890 (35)	2.26 m (7′-4½″)	970 (38)	1.1 (1.5)	h_4	2.82 m (9′-3″)	22	40 (60)
D600-2 (D24-2)	600 (24)	1:2	865 (34)	410 (16)	840 (33)	890 (35)	2.72 m (8′-10½″)	1.29 m (4′-2½″)	1.5 (2.0)	h_5	3.24 m (11′-0″)	28	50 (70)
D750-1½ (D30-1½)	750 (30)	1:1½	770 (30)	480 (19)	990 (39)	1.05 m (3′-5″)	2.68 m (8′-8½″)	1.15 m (3′-9″)	1.5 (2.0)	h_6	3.39 m (11′-0″)	28	50 (70)
D750-2 (D30-2)	750 (30)	1:2	1.01 m (3′-4″)	480 (19)	990 (39)	1.05 m (3′-5″)	3.17 m (10′-4½″)	1.5 m (4′-11″)	2.0 (2.6)	h_7	3.99 m (13′-0″)	34	60 (80)
D900-1½ (D36-1½)	900 (36)	1:1½	915 (36)	560 (22)	1.17 m (3′-10″)	1.25 m (4′-1″)	3.17 m (10′-4½″)	1.36 m (4′-5½″)	2.0 (2.6)	h_8	4.03 m (13′-3″)	30	60 (80)
D900-2 (D36-2)	900 (36)	1:2	1.22 m (4′-0″)	560 (22)	1.17 m (3′-10″)	1.25 m (4′-1″)	3.78 m (12′-4½″)	1.79 m (5′-10½″)	2.7 (3.5)	h_9	4.73 m (15′-6″)	40	70 (100)

* If embankment slope above headwall is flatter than 1:2, provide wings for 1:2 slope.

All slope ratios are expressed as units of vertical displacement to units of horizontal displacement (V:H).

All dimensions are in millimeters (inches) unless otherwise shown.

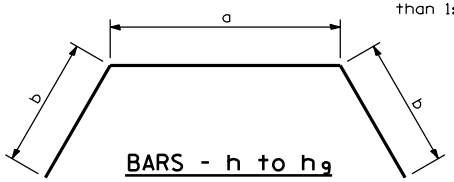

BARS - h to h_9

Bend in field
one required in each headwall

Illinois Department of Transportation

APPROVED January 1, 1997
Ralph E. Anderson
ENGINEER OF BRIDGES AND STRUCTURES

APPROVED January 1, 1997
Gary Hamdorf
ENGINEER OF DESIGN AND ENVIRONMENT

ISSUED 1-1-97

DATE	REVISIONS
1-1-97	Renum. Standard 1976-1.
6-15-94	Added slope note.
	Added Metric.

REINFORCED CONCRETE END SECTIONS FOR PIPE CULVERTS
375 mm (15″) THRU 900 mm (36″) DIA.
AT RIGHT ANGLES WITH ROADWAY

STANDARD 542101