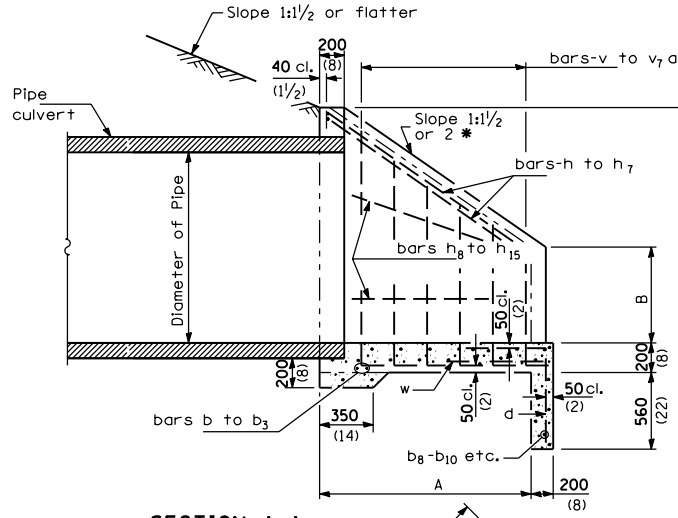

SECTION A-A

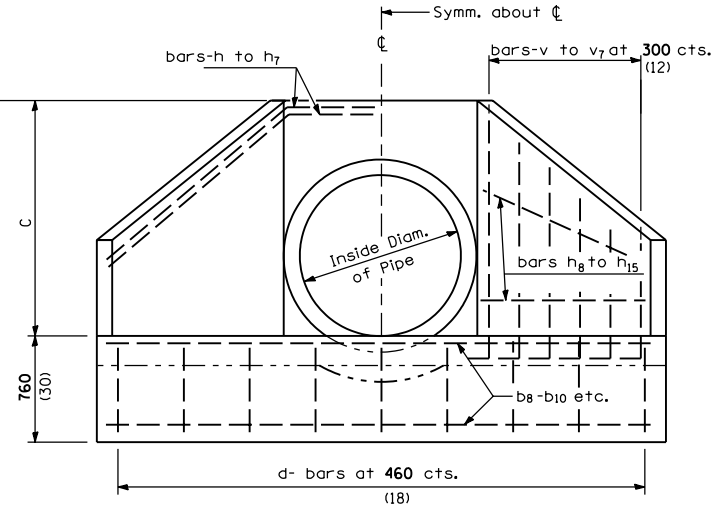

END ELEVATION

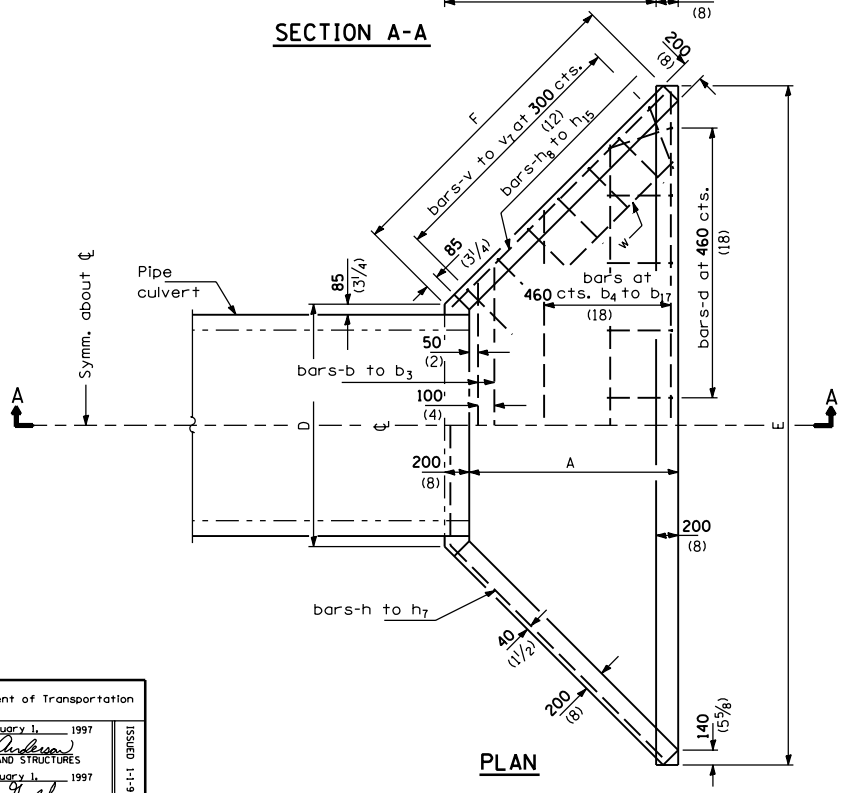

PLAN

GENERAL NOTES

* If embankment slope above headwall is flatter than 1:2, provide wings for 1:2 slope.

All slope ratios are expressed as units of vertical displacement to units of horizontal displacement (V:H).

All dimensions are in millimeters (inches) unless otherwise shown.

DATE	REVISIONS
1-1-97	Renum. Standard 1997-1.
6-15-94	Added metric and
	added slope note.

REINFORCED CONCRETE END SECTIONS FOR PIPE CULVERT 1050 mm (42") THRU 1500 mm (60") DIA. AT RIGHT ANGLES WITH ROADWAY

(Sheet 1 of 2)

STANDARD 542106

Illinois Department of Transportation

APPROVED January 1, 1997
Ralph E. Anderson
ENGINEER OF BRIDGES AND STRUCTURES

APPROVED January 1, 1997
Gary Hamdorf
ENGINEER OF DESIGN AND ENVIRONMENT

ISSUED 1-1-97

SIZES OF STRAIGHT BARS

BARS	SIZE	LENGTH	BARS	SIZE	LENGTH
b	No. 15 (No. 5)	1.9 m (6′-3″)	b_{13}	No. 15 (No. 4)	4.57 m (15′-0″)
b_1	No. 15 (No. 5)	2.06 m (6′-9″)	b_{14}	No. 15 (No. 4)	4.72 m (15′-6″)
b_2	No. 15 (No. 5)	2.21 m (7′-3″)	b_{15}	No. 15 (No. 4)	5.03 m (16′-6″)
b_3	No. 15 (No. 5)	2.44 m (8′-0″)	b_{16}	No. 15 (No. 4)	5.18 m (17′-0″)
b_4	No. 15 (No. 4)	2.51 m (8′-3″)	b_{17}	No. 15 (No. 4)	5.79 m (19′-0″)
b_5	No. 15 (No. 4)	2.74 m (9′-0″)	h_8	No. 15 (No. 4)	1.45 m (4′-9″)
b_6	No. 15 (No. 4)	3.05 m (10′-0″)	h_9	No. 15 (No. 4)	1.9 m (6′-3″)
b_7	No. 15 (No. 4)	3.2 m (10′-6″)	h_{10}	No. 15 (No. 4)	1.6 m (5′-3″)
b_8	No. 15 (No. 5)	3.43 m (11′-3″)	h_{11}	No. 15 (No. 4)	2.2 m (7′-3″)
b_9	No. 15 (No. 5)	3.66 m (12′-0″)	h_{12}	No. 15 (No. 4)	1.83 m (6′-0″)
b_{10}	No. 15 (No. 4)	3.96 m (13′-0″)	h_{13}	No. 15 (No. 4)	2.44 m (8′-0″)
b_{11}	No. 15 (No. 4)	4.11 m (13′-6″)	h_{14}	No. 15 (No. 4)	1.98 m (6′-6″)
b_{12}	No. 15 (No. 4)	4.34 m (14′-3″)	h_{15}	No. 15 (No. 4)	2.67 m (8′-9″)
			w	No. 15 (No. 4)	1.22 m (4′-0″)

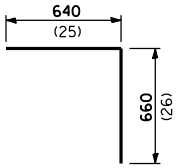

BAR d

BARS IN ONE END SECTION

1050 Pipe (42)				1200 Pipe (48)				1350 Pipe (54)				1500 Pipe (60)			
D1.05 -1½ (D42-1½)		D1.05 -2 (D42-2)		D1.2 -1½ (D48-1½)		D1.2 -2 (D48-2)		D1.35 -1½ (D54-1½)		D1.35 -2 (D54-2)		D1.5 -1½ (D60-1½)		D1.5 -2 (D60-2)	
BARS	No.	BARS	No.	BARS	No.	BARS	No.	BARS	No.	BARS	No.	BARS	No.	BARS	No.
d	8	d	9	d	9	d	10	d	10	d	12	d	11	d	13
b	2	b	2	b_1	2	b_1	2	b_2	2	b_2	2	b_3	2	b_3	2
b_5	1	b_4	1	b_7	1	b_6	1	b_5	1	b_5	1	b_7	1	b_7	1
b_8	2	b_8	1	b_{10}	2	b_{10}	1	b_9	1	b_9	1	b_{11}	1	b_{11}	1
		b_{11}	2			b_{14}	2	b_{12}	2	b_{13}	1	b_{14}	2	b_{15}	1
										b_{16}	2			b_{17}	2
h	2	h_1	2	h_2	2	h_1	2	h_4	2	h_5	2	h_6	2	h_7	2
h_8	4	h_9	4	h_{10}	4	h_9	4	h_{12}	4	h_{13}	4	h_{14}	4	h_{15}	4
v_3	2	v_3	2	v_2	2	v_2	2	v_1	2	v_1	2	v	2	v	4
v_4	2	v_4	2	v_3	2	v_3	4	v_2	2	v_2	4	v_1	2	v_1	2
v_5	2	v_5	4	v_4	2	v_4	2	v_3	2	v_3	2	v_2	2	v_2	2
v_6	2	v_6	2	v_5	2	v_5	2	v_4	2	v_4	2	v_3	2	v_3	4
v_7	2	v_7	2	v_6	2	v_6	4	v_5	2	v_5	4	v_4	2	v_4	2
								v_6	2	v_6	2	v_5	4	v_5	4
w	2	w	2	w	2	w	2	w	2	w	2	w	2	w	2

DIMENSIONS OF BENT BARS

No. 15-bars v to v_7 (No. 5)			No. 15-bars h to h_7 (No. 5)			
BARS	c	TOTAL LENGTH	BARS	a	b	TOTAL LENGTH
v	1.83 m (6′-0″)	2.44 m (8′-0″)	h	1.42 m (4′-8″)	1.57 m (5′-2″)	4.56 m (15′-0″)
v_1	1.68 m (5′-6″)	2.29 m (7′-6″)	h_1	1.42 m (4′-8″)	2.03 m (6′-8″)	5.48 m (18′-0″)
v_2	1.52 m (5′-0″)	2.13 m (7′-0″)	h_2	1.6 m (5′-3″)	1.79 m (5′-10½″)	5.18 m (17′-0″)
v_3	1.37 m (4′-6″)	1.98 m (6′-6″)	h_3	1.6 m (5′-3″)	2.29 m (7′-6″)	6.18 m (20′-3″)
v_4	1.22 m (4′-0″)	1.83 m (6′-0″)	h_4	1.78 m (5′-10″)	2.01 m (6′-7″)	5.78 m (19′-0″)
v_5	1.07 m (3′-6″)	1.68 m (5′-6″)	h_5	1.78 m (5′-10″)	2.54 m (8′-4″)	6.86 m (22′-6″)
v_6	920 (36)	1.53 m (5′-0″)	h_6	1.96 m (6′-5″)	2.18 m (7′-2″)	6.32 m (20′-9″)
v_7	610 (24)	1.22 m (4′-6″)	h_7	1.96 m (6′-5″)	2.83 m (9′-3½″)	7.59 m (25′-0″)

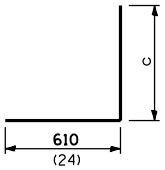

BARS v to v_7

DIMENSIONS AND QUANTITIES

DESIGN NO.	NOMINAL INSIDE DIAM. of PIPE	SLOPE of * FILL	DIMENSIONS A	B	C	D	E	F	Concrete 2 End Secs. m³ (cu. yds.)	Reinf. Bars 2 End Secs. kg (lbs.)
D1.05 -1½ (D42-1½)	1050 (42)	1:1½	1.01 m (3′-4″)	660 (26)	1.33 m (4′-4½″)	1.48 m (4′-10″)	3.63 m (11′-10½″)	1.52 m (5′-0″)	3.7 (4.8)	180 (330)
D1.05 -2 (D42-2)	1050 (42)	1:2	1.35 m (4′-5″)	660 (26)	1.33 m (4′-4½″)	1.48 m (4′-10″)	4.29 m (14′-0½″)	1.99 m (6′-6¼″)	4.7 (6.2)	220 (400)
D1.2 -1½ (D48-1½)	1200 (48)	1:1½	1.14 m (3′-9″)	740 (29)	1.5 m (4′-11″)	1.65 m (5′-5″)	4.05 m (13′-3½″)	1.7 m (5′-7″)	4.4 (5.8)	200 (360)
D1.2 -2 (D48-2)	1200 (48)	1:2	1.52 m (5′-0″)	740 (29′)	1.5 m (4′-11″)	1.65 m (5′-5″)	4.82 m (15′-9½″)	2.24 m (7′-4¼″)	5.8 (7.6)	250 (460)
D1.35 -1½ (D54-1½)	1350 (54)	1:1½	1.27 m (4′-2″)	815 (32)	1.66 m (5′-5½″)	1.83 m (6′-0″)	4.49 m (14′-8½″)	1.88 m (6′-2″)	5.2 (6.8)	240 (430)
D1.35 -2 (D54-2)	1350 (54)	1:2	1.7 m (5′-7″)	815 (32)	1.66 m (5′-5½″)	1.83 m (6′-0″)	5.35 m (17′-6½″)	2.49 m (8′-2″)	7.0 (9.2)	310 (550)
D1.5 -1½ (D60-1½)	1500 (60)	1:1½	1.4 m (4′-7″)	890 (35)	1.83 m (6′-0″)	2.0 m (6′-7″)	4.91 m (16′-1½″)	2.06 m (6′-9″)	6.1 (8.0)	280 (490)
D1.5 -2 (D60-2)	1500 (60)	1:2	1.88 m (6′-2″)	890 (35)	1.83 m (6′-0″)	2.0 m (6′-7″)	5.88 m (19′-3½″)	2.74 m (9′-0″)	8.3 (10.8)	350 (630)

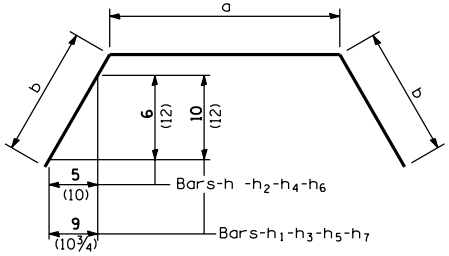

BARS - h to h_7

All dimensions are in millimeters (inches) unless otherwise shown.

Illinois Department of Transportation

APPROVED January 1, 1997
Ralph E. Anderson
ENGINEER OF BRIDGES AND STRUCTURES

APPROVED January 1, 1997
Gary Hamdorf
ENGINEER OF DESIGN AND ENVIRONMENT

ISSUED 1-1-97

REINFORCED CONCRETE END SECTIONS
FOR PIPE CULVERT
1050 mm (42″) THRU 1500 mm (60″) DIA.
AT RIGHT ANGLES WITH ROADWAY
(Sheet 2 of 2)

STANDARD 542106