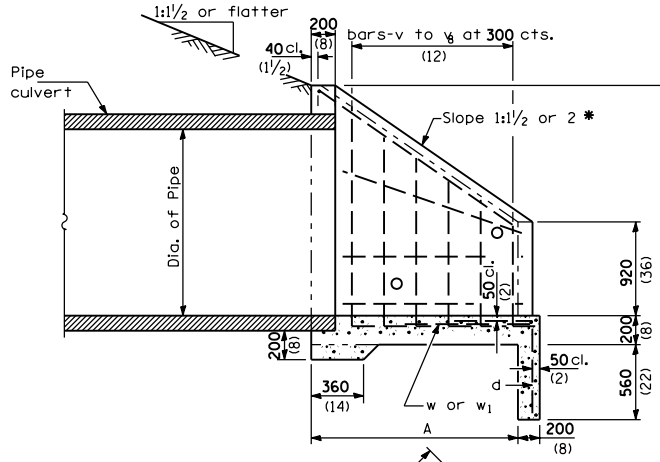

SECTION A-A

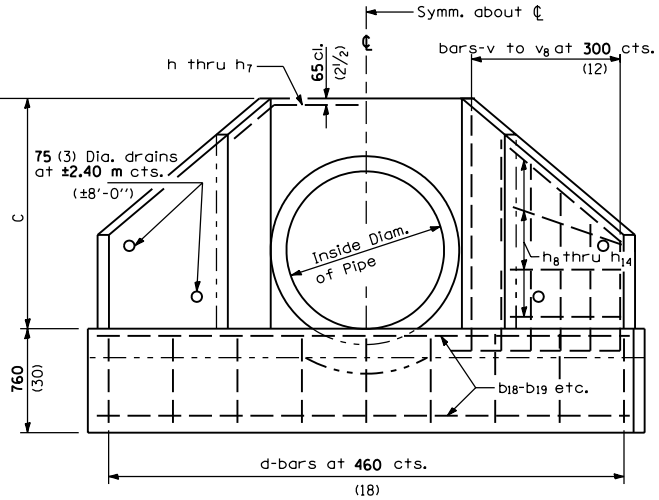

END ELEVATION

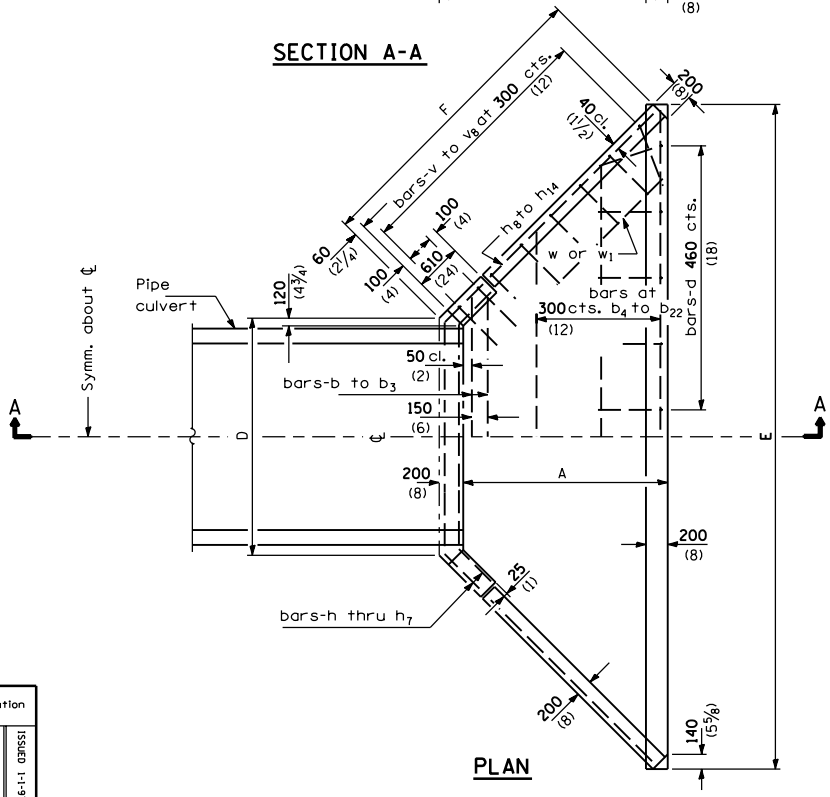

PLAN

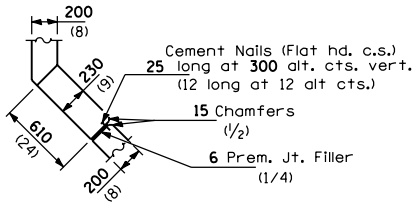

CORNER DETAIL

GENERAL NOTES

* If embankment slope above headwall is flatter than 1:2, provide wings for 1:2 slope.

All slope ratios are expressed as units of vertical displacement to units of horizontal displacement (V:H).

All dimensions are in millimeters (inches) unless otherwise shown.

Illinois Department of Transportation

APPROVED January 1, 1997
Ralph E. Anderson
ENGINEER OF BRIDGES AND STRUCTURES

APPROVED January 1, 1997
ENGINEER OF DESIGN AND ENVIRONMENT

ISSUED 1-1-97

DATE	REVISIONS
1-1-97	Renum. Standard 2093-2.
6-15-94	Moved G. N. to Specs.
	Added slope note
	and Metric.

REINFORCED CONCRETE END SECTIONS FOR PIPE CULVERTS 1650 mm (66") THRU 2100 mm (84") DIA. AT RIGHT ANGLES WITH ROADWAY

(Sheet 1 of 2)

STANDARD 542111

DIMENSIONS OF STRAIGHT BARS

BARS	SIZE	LENGTH	BARS	SIZE	LENGTH
b	No. 15 (No. 5)	2.51 m (8′-3″)	b_{16}	No. 15 (No. 4)	6.17 m (20′-3″)
b_1	No. 15 (No. 5)	2.74 m (9′-0″)	b_{17}	No. 15 (No. 4)	6.4 m (21′-0″)
b_2	No. 15 (No. 5)	2.9 m (9′-6″)	b_{18}	No. 15 (No. 4)	6.86 m (22′-6″)
b_3	No. 15 (No. 5)	3.12 m (10′-3″)	b_{19}	No. 15 (No. 4)	7.32 m (24′-0″)
b_4	No. 15 (No. 4)	3.43 m (11′-3″)	b_{20}	No. 15 (No. 4)	7.54 m (24′-9″)
b_5	No. 15 (No. 4)	3.66 m (12′-0″)	b_{21}	No. 15 (No. 4)	8.23 m (27′-0″)
b_6	No. 15 (No. 4)	3.96 m (13′-0″)	b_{22}	No. 15 (No. 4)	8.99 m (29′-6″)
b_7	No. 15 (No. 4)	4.11 m (13′-6″)	h_8	No. 15 (No. 4)	1.6 m (5′-3″)
b_8	No. 15 (No. 4)	4.27 m (14′-0″)	h_9	No. 15 (No. 4)	1.98 m (6′-6″)
b_9	No. 15 (No. 4)	4.5 m (14′-9″)	h_{10}	No. 15 (No. 4)	2.29 m (7′-6″)
b_{10}	No. 15 (No. 4)	4.72 m (15′-6″)	h_{11}	No. 15 (No. 4)	2.67 m (8′-9″)
b_{11}	No. 15 (No. 4)	4.95 m (16′-3″)	h_{12}	No. 15 (No. 4)	2.82 m (9′-3″)
b_{12}	No. 15 (No. 4)	5.11 m (16′-9″)	h_{13}	No. 15 (No. 4)	3.28 m (10′-9″)
b_{13}	No. 15 (No. 4)	5.33 m (17′-6″)	h_{14}	No. 15 (No. 4)	3.73 m (12′-3″)
b_{14}	No. 15 (No. 4)	5.64 m (18′-6″)	w	No. 15 (No. 4)	1.83 m (6′-0″)
b_{15}	No. 15 (No. 4)	5.94 m (19′-6″)	w_1	No. 15 (No. 4)	3.05 m (10′-0″)

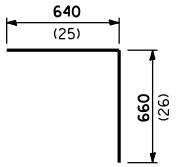

BAR d

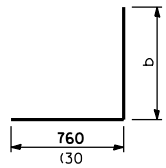

BARS v to v_8

BARS IN ONE END SECTION

1650 Pipe (66)				1800 Pipe (72)				1950 Pipe (78)				2100 Pipe (84)			
1.65 -1½ (66-1½)		1.65 -2 (66-2)		1.8 -1½ (72-1½)		1.8 -2 (72-2)		1.95 -1½ (78-1½)		1.95 -2 (78-2)		2.1 -1½ (84-1½)		2.1 -2 (84-2)	
BARS	No.	BARS	No.	BARS	No.	BARS	No.	BARS	No.	BARS	No.	BARS	No.	BARS	No.
d	12	d	14	d	14	d	17	d	16	d	19	d	17	d	20
b	2	b	2	b_1	2	b_1	2	b_2	2	b_2	2	b_3	2	b_3	2
b_4	1	b_4	1	b_5	1	b_5	1	b_5	1	b_5	1	b_6	1	b_6	1
b_7	1	b_7	1	b_8	1	b_8	1	b_8	1	b_9	1	b_9	1	b_9	1
b_{10}	1	b_{10}	1	b_{11}	1	b_{11}	1	b_{11}	1	b_{11}	1	b_{12}	1	b_{12}	1
b_{13}	2	b_{13}	1	b_{14}	1	b_{14}	1	b_{14}	1	b_{14}	1	b_{14}	1	b_{14}	1
		b_{15}	1	b_{16}	2	b_{16}	1	b_{16}	1	b_{17}	1	b_{17}	1	b_{17}	1
		b_{17}	2			b_{18}	1	b_{18}	2	b_{18}	1	b_{18}	1	b_{18}	1
						b_{19}	2			b_{20}	1	b_{19}	2	b_{20}	1
										b_{21}	2			b_{21}	1
														b_{22}	2
h	2	h_1	2	h_2	2	h_3	2	h_4	2	h_5	2	h_6	2	h_7	2
h_8	8	h_{10}	8	h_9	10	h_{12}	10	h_{10}	12	h_{13}	12	h_{11}	12	h_{14}	12
								v	4	v	4	v	4	v	4
v	4	v	4	v	4	v	4	v_1	4	v_1	8	v_1	4	v_1	6
v_1	4	v_1	6	v_1	4	v_1	8	v_2	4	v_2	6	v_2	4	v_2	4
v_2	4	v_2	4	v_2	4	v_3	6	v_4	4	v_4	6	v_4	4	v_4	6
v_4	8	v_4	10	v_4	10	v_5	10	v_5	8	v_6	8	v_6	4	v_6	6
												v_7	8	v_8	8
h_8	4	h_9	4	h_8	4	h_{10}	4	h_9	4	h_{11}	4	h_{10}	4	h_{12}	4
w	2	w	2	w	2	w_1	2	w	2	w_1	2	w_1	2	w_1	2

DIMENSIONS OF BENT BARS

No. 15-bars v to v_8 (No. 5)			No. 15-bars h to h_7 (No. 5)			
BAR	b	TOTAL LENGTH	BAR	a	b	TOTAL LENGTH
v	990 (39)	1.75 m (5′-9″)	h	2.13 m (7′-0″)	610 (24)	3.35 m (11′-0″)
v_1	1.22 m (4′-0″)	1.98 m (6′-6″)	h_1	2.13 m (7′-0″)	610 (24)	3.35 m (11′-0″)
v_2	1.52 m (5′-0″)	2.28 m (7′-6″)	h_2	2.31 m (7′-7″)	600 (23½)	3.51 m (11′-6″)
v_3	1.68 m (5′-6″)	2.44 m (8′-0″)	h_3	2.31 m (7′-7″)	600 (23½)	3.51 m (11′-6″)
v_4	1.83 m (6′-0″)	2.59 m (8′-6″)	h_4	2.49 m (8′-2″)	580 (23)	3.65 m (12′-0″)
v_5	1.98 m (6′-6″)	2.74 m (9′-0″)	h_5	2.49 m (8′-2″)	580 (23)	3.65 m (12′-0″)
v_6	2.13 m (7′-0″)	2.89 m (9′-6″)	h_6	2.67 m (8′-9″)	610 (24)	3.89 m (12′-9″)
v_7	2.29 m (7′-6″)	3.05 m (10′-0″)	h_7	2.67 m (8′-9″)	610 (24)	3.89 m (12′-9″)
v_8	2.44 m (8′-0″)	3.2 m (10′-6″)				

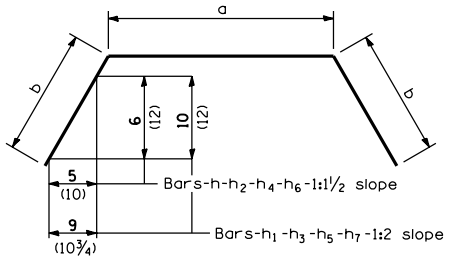

BARS - h to h_7

DESIGN NO.	NOMINAL INSIDE DIAM. of PIPE	SLOPE of FILL	DIMENSIONS A	C	D	E	F	Concrete 2 End Secs. m^3 (cu. yds.)	Reinf. Bars 2 End Secs. kg (lbs.)
D1.65 -1½ (D66-1½)	1650 (66)	1:1½	1.65 m (5′-4″)	1.99 m (6′-6½″)	2.25 m (7′-4½″)	5.63 m (18′-5″)	2.39 m (7′-10″)	7.8 (10.2)	370 (660)
D1.65 -2 (D66-2)	1650 (66)	1:2	2.18 m (7′-1″)	2.0 m (6′-6½″)	2.25 m (7′-4½″)	6.69 m (21′-11″)	3.14 m (10′-3½″)	10.3 (13.5)	470 (820)
D1.8 -1½ (D72-1½)	1800 (72)	1:1½	1.9 m (6′-2″)	2.16 m (7′-1″)	2.43 m (7′-11½″)	6.3 m (20′-8″)	2.74 m (9′-0″)	9.5 (12.4)	450 (770)
D1.8 -2 (D72-2)	1800 (72)	1:2	2.51 m (8′-2″)	2.16 m (7′-1″)	2.43 m (7′-11½″)	7.54 m (24′-8″)	3.61 m (11′-10″)	12.6 (16.5)	600 (1020)
D1.95 -1½ (D78-1½)	1950 (78)	1:1½	2.12 m (6′-11″)	2.32 m (7′-7½″)	2.6 m (8′-6½″)	6.93 m (22′-9″)	3.06 m (10′-0½″)	11.1 (14.5)	530 (910)
D1.95 -2 (D78-2)	1950 (78)	1:2	2.82 m (9′-3″)	2.32 m (7′-7½″)	2.6 m (8′-6½″)	8.37 m (27′-5″)	4.08 m (13′-4½″)	15.0 (19.6)	710 (1210)
D2.1 -1½ (D84-1½)	2100 (84)	1:1½	2.38 m (7′-9″)	2.49 m (8′-2″)	2.78 m (9′-1½″)	7.63 m (25′-0″)	3.43 m (11′-3″)	13.1 (17.1)	640 (1090)
D2.1 -2 (D84-2)	2100 (84)	1:2	3.17 m (10′-4″)	2.49 m (8′-2″)	2.78 m (9′-1½″)	9.2 m (30′-2″)	4.54 m (14′-10¾″)	17.7 (23.2)	810 (1360)

All dimensions are in millimeters (inches) unless otherwise shown.

Illinois Department of Transportation

APPROVED January 1, 1997
Ralph E. Anderson
ENGINEER OF BRIDGES AND STRUCTURES

APPROVED January 1, 1997
ENGINEER OF DESIGN AND ENVIRONMENT

ISSUED 1-1-97

REINFORCED CONCRETE END SECTIONS FOR PIPE CULVERTS
1650 mm (66″) THRU 2100 mm (84″) DIA.
AT RIGHT ANGLES WITH ROADWAY
(Sheet 2 of 2)

STANDARD 542111