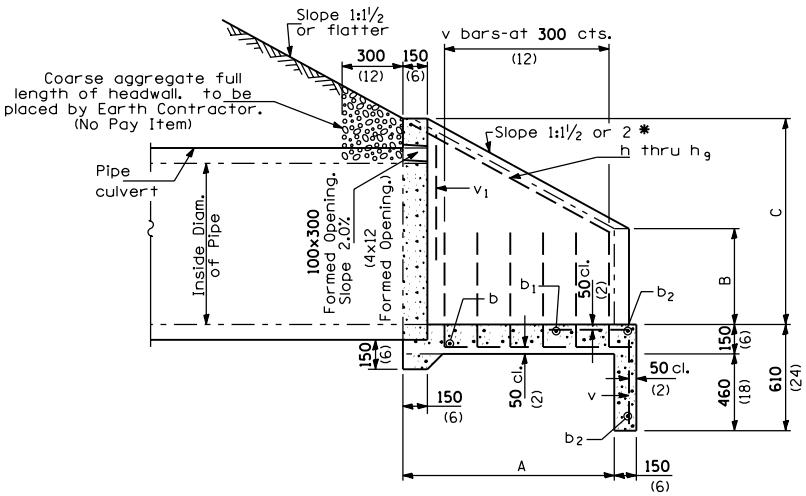

SECTION A-A

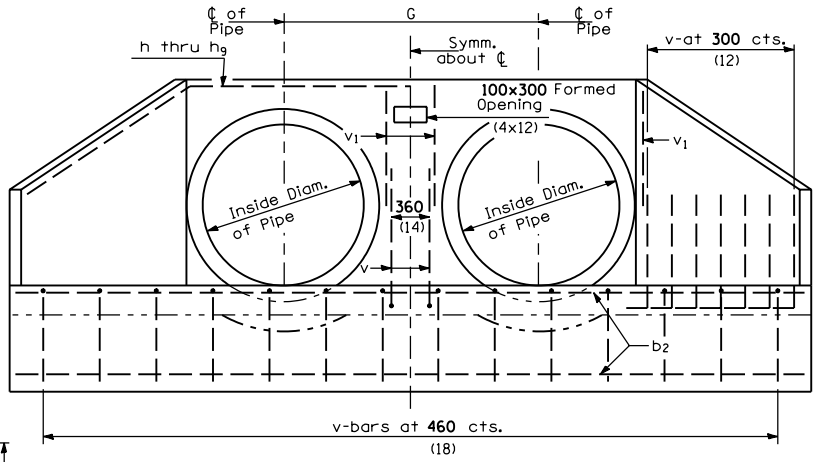

END ELEVATION

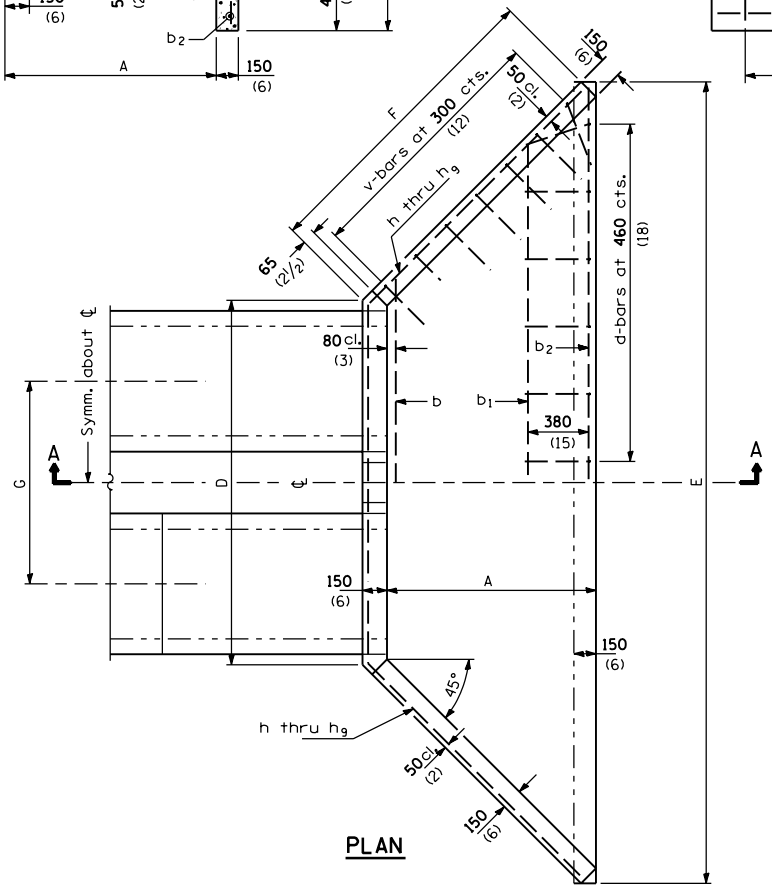

PLAN

GENERAL NOTES

* If embankment slope above headwall is flatter than 1:2, provide wings for 1:2 slope.

All slope ratios are expressed as units of vertical displacement to units of horizontal displacement (V:H).

All dimensions are in millimeters (inches) unless otherwise shown.

Illinois Department of Transportation

APPROVED January 1, 1997
Ralph E. Anderson
ENGINEER OF BRIDGES AND STRUCTURES

APPROVED January 1, 1997
Gary Hamdal
ENGINEER OF DESIGN AND ENVIRONMENT

ISSUED 1-1-97

DATE	REVISIONS
1-1-97	Renum. Standard 2102-2.
6-15-94	Moved G.N. to Specs.
	Added slope note.
	Added Metric.

REINFORCED CONCRETE END SECTIONS FOR MULTIPLE (2 & 3) PIPE CULVERTS 375 mm (15") THRU 900 mm (36") DIA. AT RIGHT ANGLES WITH ROADWAY

(Sheet 1 of 3)

STANDARD 542116

DIMENSIONS FOR No. 15 BARS-h to h_9
(No. 4)

MARK	2 PIPES		3 PIPES	
	a	b	a	b
h	1.5 m (4'-11")	740 (29)	2.44 m (8'-0")	760 (30)
h_1	1.5 m (4'-11")	1.0 m (3'-3½")	2.44 m (8'-0")	990 (39)
h_2	1.65 m (5'-5")	740 (29)	2.67 m (8'-9")	760 (30)
h_3	1.65 m (5'-5')	1.0 m (3'-3½")	2.67 m (8'-9")	990 (39)
h_4	2.06 m (6'-9")	990 (39)	3.28 m (10'-9")	990 (39)
h_5	2.06 m (6'-9")	1.3 m (4'-3")	3.28 m (10'-9")	1.3 m (4'-3")
h_6	2.36 m (7'-9")	1.18 m (3'-10½")	3.74 m (12'-3")	1.18 m (3'-10½")
h_7	2.36 m (7'-9")	1.49 m (4'-10½")	3.74 m (12'-3")	1.49 m (4'-10½")
h_8	2.75 m (9'-0")	1.45 m (4'-9")	4.27 (14'-0")	1.45 m (4'-9")
h_9	2.75 m (9'-0")	1.75 m (5'-9")	4.27 (14'-0")	1.75 m (5'-9")

TABLE OF DIMENSIONS

DESIGN NO.	NOMINAL DIAM. of PIPE	SLOPE of FILL	DIMENSIONS SAME FOR ALL MULTIPLES					DIMENSIONS FOR 2 PIPES		DIMENSIONS FOR 3 PIPES	
			A	B	C	F	G	D	E	D	E
D375-1½ (D15-1½)	375 (15)	1:1½	495 (19)	260 (10)	590 (23)	750 (29½)	940 (37)	1.55 m (5'-1")	2.61 m (8'-6½")	2.49 m (8'-2")	3.55 m (11'-7½")
D375-2 (D15-2)	375 (15)	1:2	660 (26)	260 (10)	590 (23)	1.0 m (3'-3¼")	940 (37)	1.55 m (5'-1")	2.96 m (9'-8½")	2.49 m (8'-2")	3.9 m (12'-9½")
D450-1½ (D18-1½)	450 (18)	1:1½	495 (19)	330 (13)	660 (26)	750 (29½)	1.02 m (3'-4")	1.71 m (5'-7")	2.77 m (9'-0½")	2.73 m (8'-11")	3.79 m (12'-4½")
D450-2 (D18-2)	450 (18)	1:2	660 (26)	330 (13)	660 (26)	1.0 m (3'-3¼")	1.02 m (3'-4")	1.71 m (5'-7")	3.12 m (10'-2½")	2.73 m (8'-11")	4.14 m (13'-6½")
D600-1½ (D24-1½)	600 (24)	1:1½	640 (25)	410 (16)	840 (33)	965 (38)	1.22 m (4'-0")	2.11 m (6'-11")	3.47 m (11'-4½")	3.33 m (10'-11")	4.69 m (15'-4½")
D600-2 (D24-2)	600 (24)	1:2	860 (34)	410 (16)	840 (33)	1.28 m (4'-2½")	1.22 m (4'-0")	2.11 m (6'-11")	3.92 m (12'-10½")	3.33 m (10'-11")	5.14 m (16'-10½")
D750-1½ (D30-1½)	750 (30)	1:1½	760 (30)	485 (19)	990 (39)	1.14 m (3'-9")	1.37 m (4'-6")	2.41 m (7'-11")	4.02 m (13'-2½")	3.78 m (12'-5")	5.39 m (17'-8½")
D750-2 (D30-2)	750 (30)	1:2	1.01 m (3'-4")	485 (19)	990 (39)	1.5 m (4'-11")	1.37 m (4'-6")	2.41 m (7'-11")	4.53 m (14'-10½")	3.78 m (12'-5")	5.9 m (19'-4½")
D900-1½ (D36-1½)	900 (36)	1:1½	915 (36)	560 (22)	1.17 m (3'-10")	1.36 m (4'-5½")	1.57 m (5'-2")	2.75 m (9'-0")	4.67 m (15'-6½")	4.32 m (14'-5")	6.24 m (20'-8½")
D900-2 (D36-2)	900 (36)	1:2	1.22 m (4'-0")	560 (22)	1.17 m (3'-10")	1.79 m (5'-10½")	1.57 m (5'-2")	2.75 m (9'-0')	5.28 m (17'-6½")	4.32 m (14'-5")	6.85 m (22'-8½")

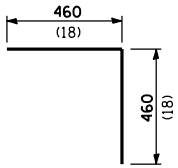

BAR v

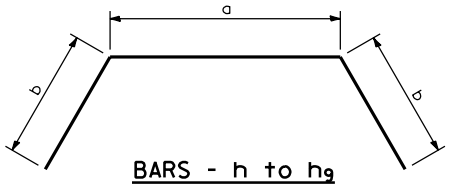

BARS - h to h_9
Bend in field
One required in each headwall

All dimensions are in millimeters (inches) unless otherwise shown.

Illinois Department of Transportation

APPROVED January 1, 1997
Ralph E. Anderson
ENGINEER OF BRIDGES AND STRUCTURES

APPROVED January 1, 1997
Gary Hamdal
ENGINEER OF DESIGN AND ENVIRONMENT

ISSUED 1-1-97

REINFORCED CONCRETE END SECTIONS FOR MULTIPLE (2 & 3) PIPE CULVERTS 375 mm (15") THRU 900 mm (36") DIA. AT RIGHT ANGLES WITH ROADWAY
(Sheet 2 of 3)

STANDARD 542116

TABLE OF QUANTITIES

DESIGN NO.	Concrete 2 End Secs. m³ (cu. yds.)	REINFORCEMENT BARS IN ONE END SECTION: No. 15-h Bars (No. 4) MARK	LENGTH	No. 15-b_2 Bars (No. 4) QTY.	LENGTH	No. 15-b_1 Bars (No. 4) QTY.	LENGTH	No. 15-b Bars (No. 4) QTY.	LENGTH	No. 15-v_1 Bars (No. 4) QTY.	LENGTH	No. 15-v (No. 4) QTY.	TOTAL Qty. 2 End Secs. kg (lbs.)
FOR 2 PIPES													
D375-1½ (D15-1½)	1.1 (1.4)	h	2.98 m (9′-9″)	2	2.5 m (8′-3″)			1	1.9 m (6′-3″)			14	70 (100)
D375-2 (D15-2)	1.4 (1.8)	h_1	3.5 m (11′-6″)	2	2.82 m (9′-3″)	1	2.21 m (7′-3″)	1	1.9 m (6′-3″)			17	90 (130)
D450-1½ (D18-1½)	1.3 (1.7)	h_2	3.13 m (10′-3″)	2	2.59 m (8′-6″)			1	2.06 m (6′-9″)			14	70 (100)
D450-2 (D18-2)	1.5 (2.0)	h_3	3.65 m (12′-0″)	2	2.97 m (9′-9″)	1	2.36 m (7′-9″)	1	2.06 m (6′-9″)			17	90 (130)
D600-1½ (D24-1½)	1.8 (2.4)	h_4	4.04 m (13′-3″)	2	3.35 m (11′-0″)	1	2.74 m (9′-0″)	1	2.44 m (8′-0″)	4	790 (31)	18	110 (160)
D600-2 (D24-2)	2.3 (3.0)	h_5	4.66 m (15′-3″)	2	3.81 m (12′-6″)	1	3.2 m (10′-6″)	1	2.44 m (8′-0″)	4	790 (31)	21	130 (180)
D750-1½ (D30-1½)	2.3 (3.0)	h_6	4.72 m (15′-6″)	2	3.89 m (12′-9″)	1	3.12 m (10′-3″)	1	2.51 m (8′-3″)	4	790 (31)	19	120 (170)
D750-2 (D30-2)	2.9 (3.8)	h_7	5.34 m (17′-6″)	2	4.42 m (14′-6″)	1	3.73 m (12′-3″)	1	2.51 m (8′-3″)	4	790 (31)	22	140 (190)
D900-1½ (D36-1½)	3.0 (3.9)	h_8	5.65 m (18′-6″)	2	4.57 m (15′-0″)	1	3.81 m (12′-6″)	1	2.97 m (9′-9″)	4	1.07 m (3′-6″)	22	150 (200)
D900-2 (D36-2)	3.8 (5.0)	h_9	6.25 m (20′-6″)	2	5.18 m (17′-0″)	1	4.42 m (14′-6″)	1	2.97 m (9′-9″)	4	1.07 m (3′-6″)	26	170 (230)
FOR 3 PIPES													
D375-1½ (D15-1½)	1.5 (2.0)	h	3.96 m (13′-0″)	2	3.43 m (11′-3″)			1	2.82 m (9′-3″)			18	100 (130)
D375-2 (D15-2)	1.9 (2.5)	h_1	4.42 m (14′-6″)	2	3.74 m (12′-3″)	1	3.35 m (11′-0″)	1	2.82 m (9′-3″)			21	120 (170)
D450-1½ (D18-1½)	1.8 (2.3)	h_2	4.19 m (13′-9″)	2	3.66 m (12′-0″)			1	3.05 m (10′-0″)			19	100 (140)
D450-2 (D18-2)	2.0 (2.7)	h_3	4.65 m (15′-3″)	2	3.96 m (13′-0″)	1	3.58 m (11′-9″)	1	3.05 m (10′-0″)			21	120 (190)
D600-1½ (D24-1½)	2.4 (3.2)	h_4	5.26 m (17′-3″)	2	4.57 m (15′-0″)	1	4.11 m (13′-6″)	1	3.65 m (12′-0″)	6	790 (31)	22	150 (210)
D600-2 (D24-2)	3.0 (3.9)	h_5	5.88 m (19′-3″)	2	5.03 m (16′-6″)	1	4.72 m (15′-6″)	1	3.65 m (12′-0″)	6	790 (31)	25	170 (230)
D750-1½ (D30-1½)	3.1 (4.1)	h_6	6.1 m (20′-0″)	2	5.26 m (17′-3″)	1	4.5 m (14′-9″)	1	3.96 m (13′-0″)	6	790 (31)	24	170 (230)
D750-2 (D30-2)	3.8 (5.0)	h_7	6.72 m (22′-0″)	2	5.79 m (19′-0″)	1	5.11 m (16′-9″)	1	3.96 m (13′-0″)	6	790 (31)	27	180 (250)
D900-1½ (D36-1½)	4.1 (5.3)	h_8	7.17 m (23′-6″)	2	6.1 m (20′-0″)	1	5.33 m (17′-6″)	1	4.5 m (14′-9″)	6	1.07 m (3′-6″)	28	190 (270)
D900-2 (D36-2)	5.0 (6.5)	h_9	7.77 m (25′-6″)	2	6.71 m (22′-0″)	1	5.94 m (19′-6″)	1	4.5 m (14′-9″)	6	1.07 m (3′-6″)	31	210 (290)

All dimensions are in millimeters (inches) unless otherwise shown.

REINFORCED CONCRETE END SECTIONS FOR MULTIPLE (2 & 3) PIPE CULVERTS 375 mm (15″) THRU 900 mm (36″) DIA. AT RIGHT ANGLES WITH ROADWAY

(Sheet 3 of 3)

STANDARD 542116

Illinois Department of Transportation

APPROVED January 1, 1997
Ralph E. Anderson
ENGINEER OF BRIDGES AND STRUCTURES

APPROVED January 1, 1997
ENGINEER OF DESIGN AND ENVIRONMENT

ISSUED 1-1-97