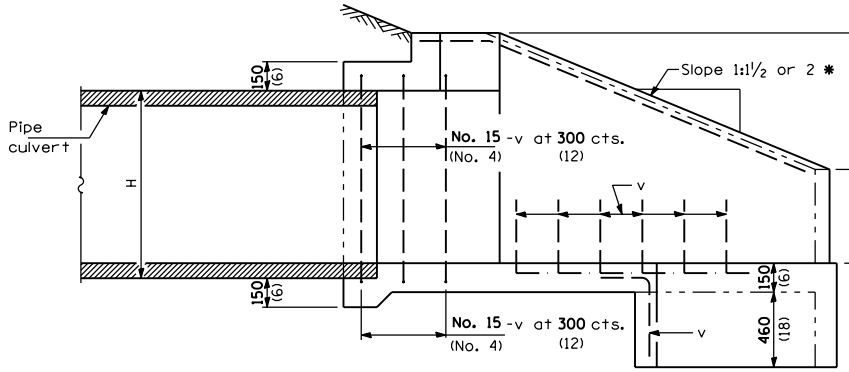

SECTION A-A

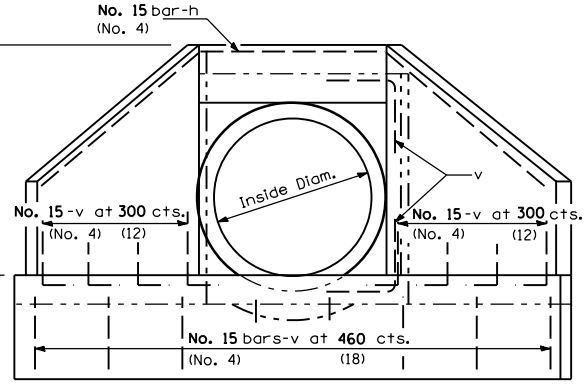

END VIEW

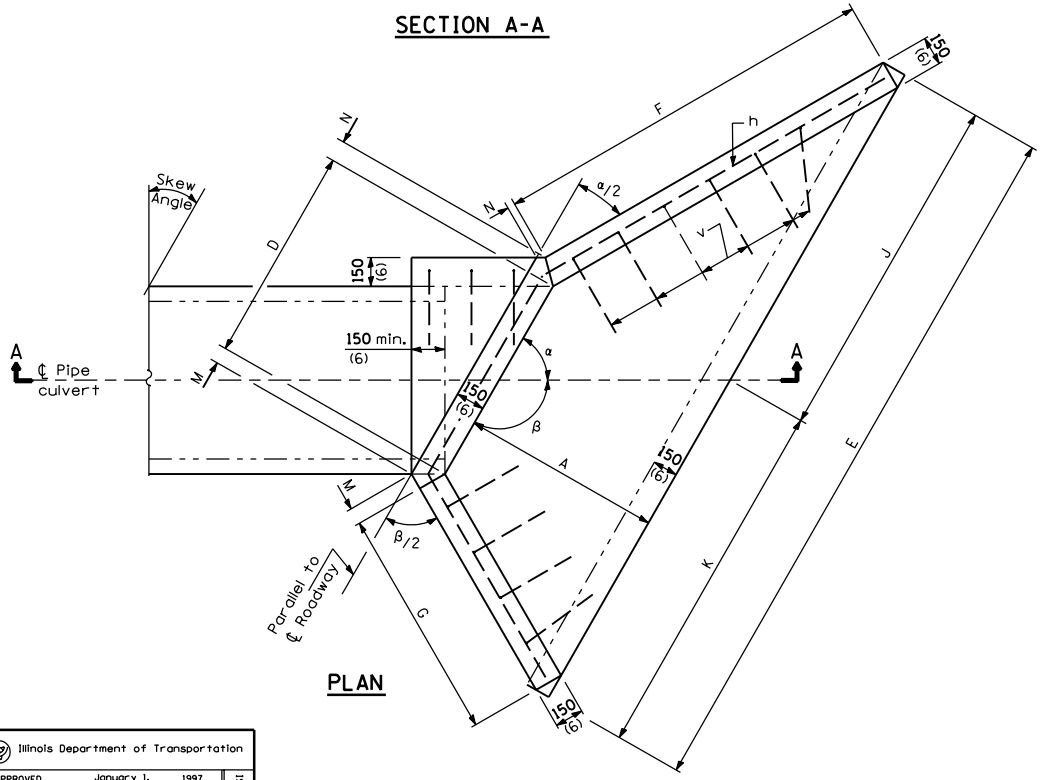

PLAN

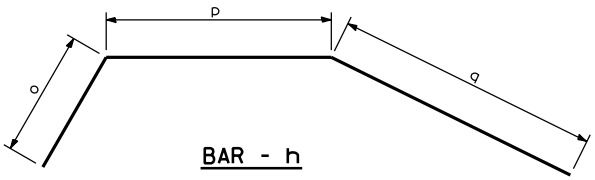

BAR - h

Bent in field
one required for each headwall

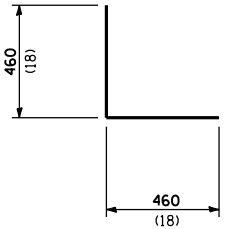

BAR - v

GENERAL NOTES

Build tops of headwalls parallel to grade line.

* If embankment slope above headwall is flatter than 1:2, provide wings for 1:2 slope.

All slope ratios are expressed as units of vertical displacement to units of horizontal displacement (V:H).

All dimensions are in millimeters (inches) unless otherwise shown.

Illinois Department of Transportation

APPROVED January 1, 1997
Ralph E. Anderson
ENGINEER OF BRIDGES AND STRUCTURES

APPROVED January 1, 1997
ENGINEER OF DESIGN AND ENVIRONMENT

ISSUED 1-1-97

DATE	REVISIONS
1-1-97	Renum. Standard 2051-2.
	Deleted DN Symbol.
6-15-94	Moved G.N. to Specs.
	Added slope note.
	Added Metric.

REINFORCED CONCRETE END SECTIONS FOR PIPE CULVERTS 375 mm (15") THRU 900 mm (36") DIA. SKEWED WITH ROADWAY

(Sheet 1 of 5)

STANDARD 542201

WINGS FOR 1:1½ SLOPE

Skew Angle	Design No.	Nominal Dia. For Pipe	DIMENSIONS FOR CONCRETE A	B	C	D	E	F	G	H	J	K	M	N	α	Concrete 2 End Secs. m3 (yd3)	Reinf. Bars - 2 End Secs. h - bars o	p	q	Lgth.	v-bars No.	Bars 2 End Secs. kg (lbs)
5°	DS 375-1½ (DS 15-1½)	375 (15)	720 (28)	260 (10)	740 (29)	485 (19)	2.15 m (6′-11¾″)	1.07 m (3′-5½″)	980 (38)	483 (19)	1.07 m (3′-5¾″)	1.08 m (3′-6″)	70 (2¾)	60 (2¼)	85°	1.1 (1.4)	1.01 m (3′-6″)	551 (21)	1.09 m (3′-9″)	2.65 m (9′-0″)	28	45 (70)
	DS 450-1½ (DS 18-1½)	450 (18)	720 (28)	330 (13)	810 (32)	561 (22)	2.22 m (7′-2¾″)	1.07 m (3′-5½″)	980 (38)	559 (22)	1.11 m (3′-7¼″)	1.11 m (3′-7½″)	70 (2¾)	60 (2¼)	85°	1.2 (1.6)	1.03 m (3′-6″)	626 (24)	1.12 m (3′-9″)	2.78 m (9′-3″)	28	45 (70)
	DS 600-1½ (DS 24-1½)	600 (24)	870 (34)	410 (16)	990 (39)	765 (30)	2.73 m (8′-10¾″)	1.29 m (4′-2¼″)	1.18 m (3′-10″)	762 (30)	1.36 m (4′-5¼″)	1.37 m (4′-5½″)	70 (2¾)	60 (2¼)	85°	1.7 (2.2)	1.23 m (4′-3″)	832 (32)	1.33 m (4′-7″)	3.39 m (11′-6″)	32	52 (80)
	DS 750-1½ (DS 30-1½)	750 (30)	990 (39)	480 (19)	1140 (3′-9″)	917 (36)	3.12 m (10′-3″)	1.47 m (4′-9¾″)	1.35 m (4′-5″)	914 (36)	1.56 m (5′-1¼″)	1.56 m (5′-1¾″)	70 (2¾)	60 (2¼)	85°	2.1 (2.7)	1.39 m (4′-10″)	983 (39)	1.51 m (5′-2″)	3.88 m (13′-3″)	36	58 (90)
	DS 900-1½ (DS 36-1½)	900 (36)	1140 (3′-9″)	560 (22)	1320 (4′-4″)	1123 (3′-8¼″)	3.63 m (11′-11″)	1.69 m (5′-6½″)	1.55 m (5′-1″)	1.119 m (3′-8″)	1.81 m (5′-11¼″)	1.82 m (5′-11¾″)	70 (2¾)	60 (2¼)	85°	2.5 (3.3)	1.6 m (5′-7″)	1.19 m (3′-11″)	1.73 m (6′-0″)	4.52 m (15′-6″)	42	68 (100)
10°	DS 375-1½ (DS 15-1½)	375 (15)	720 (28)	260 (10)	740 (29)	490 (19¼)	2.17 m (7′-0½″)	1.12 m (3′-7½″)	940 (36½)	483 (19)	1.08 m (3′-6″)	1.09 m (3′-6½″)	70 (2¾)	60 (2¼)	80°	1.2 (1.5)	972 (3′-4″)	557 (22)	1.14 m (3′-10″)	2.67 m (9′-0″)	28	45 (70)
	DS 450-1½ (DS 18-1½)	450 (18)	720 (28)	330 (13)	810 (32)	568 (22¼)	2.24 m (7′-3¾″)	1.12 m (3′-7½″)	940 (36½)	559 (22)	1.11 m (3′-7½″)	1.13 m (3′-8¼″)	70 (2¾)	60 (2¼)	80°	1.2 (1.6)	990 (3′-4″)	633 (25)	1.17 m (3′-10″)	2.8 m (9′-3″)	28	45 (70)
	DS 600-1½ (DS 24-1½)	600 (24)	870 (34)	410 (16)	990 (39)	774 (30½)	2.76 m (9′-0″)	1.36 m (4′-5″)	1.14 m (3′-8½″)	762 (30)	1.37 m (4′-5¾″)	1.39 m (4′-6¼″)	70 (2¾)	60 (2¼)	80°	1.7 (2.2)	1.18 m (4′-1″)	841 (33)	1.4 m (4′-8″)	3.42 m (11′-6″)	34	55 (80)
	DS 750-1½ (DS 30-1½)	750 (30)	990 (39)	480 (19)	1140 (3′-9″)	928 (36½)	3.15 m (10′-4¼″)	1.54 m (5′-0¾″)	1.3 m (4′-3″)	914 (36)	1.57 m (5′-1¾″)	1.58 m (5′-2½″)	70 (2¾)	60 (2¼)	80°	2.1 (2.8)	1.34 m (4′-9″)	993 (39)	1.58 m (5′-6″)	3.92 m (13′-6″)	36	59 (90)
	DS 900-1½ (DS 36-1½)	900 (36)	1140 (3′-9″)	560 (22)	1320 (4′-4″)	1136 (3′-8¾″)	3.67 m (12′-0½″)	1.78 m (5′-10″)	1.49 m (4′-10¾″)	1.119 m (3′-8″)	1.83 m (6′-0″)	1.84 m (6′-0½″)	70 (2¾)	60 (2¼)	80°	2.7 (3.5)	1.54 m (5′-6″)	1.2 m (3′-11″)	1.82 m (6′-4″)	4.56 m (15′-9″)	42	68 (110)
15°	DS 375-1½ (DS 15-1½)	375 (15)	720 (28)	260 (10)	740 (29)	500 (19¾)	2.2 m (7′-2″)	1.19 m (3′-10″)	910 (35¼)	483 (19)	1.09 m (3′-6½″)	1.11 m (3′-7½″)	80 (3)	50 (2)	75°	1.2 (1.5)	942 (3′-4″)	567 (22)	1.2 m (4′-1″)	2.71 m (9′-3″)	28	45 (70)
	DS 450-1½ (DS 18-1½)	450 (18)	720 (28)	330 (13)	810 (32)	579 (22¾)	2.28 m (7′-5¼″)	1.19 m (3′-10″)	910 (35¼)	559 (22)	1.13 m (3′-8″)	1.15 m (3′-9¼″)	80 (3)	50 (2)	75°	1.3 (1.7)	965 (3′-4″)	644 (25)	1.23 m (4′-1″)	2.84 m (9′-6″)	28	45 (70)
	DS 600-1½ (DS 24-1½)	600 (24)	870 (34)	410 (16)	990 (39)	789 (31)	2.8 m (9′-2″)	1.43 m (4′-7¾″)	1.1 m (3′-6¾″)	762 (30)	1.39 m (4′-6½″)	1.41 m (4′-7½″)	80 (3)	50 (2)	75°	1.8 (2.3)	1.15 m (4′-0″)	857 (34)	1.47 m (4′-11″)	3.47 m (11′-9″)	34	55 (80)
	DS 750-1½ (DS 30-1½)	750 (30)	990 (39)	480 (19)	1140 (3′-9″)	946 (37¼)	3.21 m (10′-6½″)	1.63 m (5′-4″)	1.25 m (4′-1¼″)	914 (36)	1.59 m (5′-2¾″)	1.62 m (5′-3¾″)	80 (3)	50 (2)	75°	2.2 (2.9)	1.3 m (4′-8″)	1.01 m (3′-4″)	1.67 m (5′-9″)	3.98 m (13′-9″)	40	64 (100)
	DS 900-1½ (DS 36-1½)	900 (36)	1140 (3′-9″)	560 (22)	1320 (4′-4″)	1158 (3′-9½″)	3.73 m (12′-3¼″)	1.87 m (6′-2″)	1.44 m (4′-8¾″)	1.119 m (3′-8″)	1.85 m (6′-1″)	1.88 m (6′-2¼″)	80 (3)	50 (2)	75°	2.9 (3.8)	1.49 m (5′-3″)	1.22 m (4′-0″)	1.92 m (6′-6″)	4.63 m (15′-9″)	46	74 (110)
20°	DS 375-1½ (DS 15-1½)	375 (15)	720 (28)	260 (10)	740 (29)	514 (20¼)	2.26 m (7′-4″)	1.26 m (4′-0¾″)	880 (34¼)	483 (19)	1.11 m (3′-7¼″)	1.15 m (3′-8¾″)	80 (3)	50 (2)	70°	1.2 (1.6)	916 (39)	581 (23)	1.27 m (4′-4″)	2.77 m (9′-6″)	28	45 (70)
	DS 450-1½ (DS 18-1½)	450 (18)	720 (28)	330 (13)	810 (32)	595 (23½)	2.34 m (7′-7½″)	1.26 m (4′-0¾″)	880 (34¼)	559 (22)	1.15 m (3′-9″)	1.19 m (3′-10½″)	80 (3)	50 (2)	70°	1.3 (1.7)	938 (39)	661 (26)	1.31 m (4′-4″)	2.9 m (9′-9″)	28	45 (70)
	DS 600-1½ (DS 24-1½)	600 (24)	870 (34)	410 (16)	990 (39)	811 (32)	2.87 m (9′-4½″)	1.52 m (4′-11¼″)	1.07 m (3′-5½″)	762 (30)	1.42 m (4′-7½″)	1.45 m (4′-9″)	80 (3)	50 (2)	70°	1.8 (2.4)	1.11 m (3′-11″)	879 (35)	1.56 m (5′-2″)	3.55 m (12′-0″)	38	61 (90)
	DS 750-1½ (DS 30-1½)	750 (30)	990 (39)	480 (19)	1140 (3′-9″)	973 (38¼)	3.29 m (10′-9¾″)	1.73 m (5′-8″)	1.21 m (3′-11½″)	914 (36)	1.63 m (5′-4¼″)	1.66 m (5′-5½″)	80 (3)	50 (2)	70°	2.4 (3.1)	1.26 m (4′-5″)	1.04 m (3′-5″)	1.77 m (5′-11″)	4.07 m (13′-9″)	42	67 (100)
	DS 900-1½ (DS 36-1½)	900 (36)	1140 (3′-9″)	560 (22)	1320 (4′-4″)	1191 (3′-10¾″)	3.86 m (12′-7″)	1.99 m (6′-6½″)	1.41 m (4′-7″)	1.119 m (3′-8″)	1.9 m (6′-2¾″)	1.93 m (6′-4¼″)	80 (3)	50 (2)	70°	3.1 (4.0)	1.45 m (5′-3″)	1.26 m (4′-1″)	2.03 m (6′-11″)	4.73 m (16′-3″)	50	80 (120)
25°	DS 375-1½ (DS 15-1½)	375 (15)	720 (28)	260 (10)	740 (29)	533 (21)	2.33 m (7′-7″)	1.34 m (4′-4″)	860 (33¼)	483 (19)	1.14 m (3′-8½″)	1.19 m (3′-10½″)	90 (3¼)	50 (1¾)	65°	1.2 (1.6)	893 (39)	600 (23)	1.36 m (4′-7″)	2.85 m (9′-9″)	28	45 (70)
	DS 450-1½ (DS 18-1½)	450 (18)	720 (28)	330 (13)	810 (32)	617 (24¼)	2.42 m (7′-10¼″)	1.34 m (4′-4″)	860 (33¼)	559 (22)	1.19 m (3′-10¼″)	1.23 m (4′-0″)	90 (3¼)	50 (1¾)	65°	1.4 (1.8)	914 (38)	683 (27)	1.39 m (4′-7″)	2.99 m (10′-0″)	32	51 (80)
	DS 600-1½ (DS 24-1½)	600 (24)	870 (34)	410 (16)	990 (39)	841 (33)	2.97 m (9′-8½″)	1.62 m (5′-3¼″)	1.04 m (3′-4¼″)	762 (30)	1.46 m (4′-9¼″)	1.51 m (4′-11¼″)	90 (3¼)	50 (1¾)	65°	1.9 (2.5)	1.09 m (3′-10″)	909 (35)	1.66 m (5′-6″)	3.65 m (12′-3″)	38	61 (90)
	DS 750-1½ (DS 30-1½)	750 (30)	990 (39)	480 (19)	1140 (3′-9″)	1008 (3′-3¾″)	3.4 m (11′-2″)	1.83 m (6′-0½″)	1.18 m (3′-10¼″)	914 (36)	1.68 m (5′-6″)	1.72 m (5′-8″)	90 (3¼)	50 (1¾)	65°	2.5 (3.3)	1.23 m (4′-5″)	1.08 m (3′-6″)	1.88 m (6′-4″)	4.18 m (14′-3″)	44	71 (110)
	DS 900-1½ (DS 36-1½)	900 (36)	1140 (3′-9″)	560 (22)	1320 (4′-4″)	1235 (4′-0½″)	3.96 m (13′-0¼″)	2.12 m (6′-11¾″)	1.36 m (4′-5¼″)	1.119 m (3′-8″)	1.96 m (6′-5¼″)	2 m (6′-7″)	90 (3¼)	50 (1¾)	65°	3.3 (4.3)	1.41 m (5′-0″)	1.3 m (4′-3″)	2.16 m (7′-3″)	4.87 m (16′-6″)	50	80 (120)
30°	DS 375-1½ (DS 15-1½)	375 (15)	720 (28)	260 (10)	740 (29)	558 (22)	2.43 m (7′-10¾″)	1.44 m (4′-8″)	830 (32¼)	483 (19)	1.19 m (3′-10¼″)	1.24 m (4′-0½″)	90 (3½)	40 (1½)	60°	1.3 (1.7)	873 (37)	626 (24)	1.46 m (4′-11″)	2.95 m (10′-0″)	36	57 (90)
	DS 450-1½ (DS 18-1½)	450 (18)	720 (28)	330 (13)	810 (32)	645 (25½)	2.52 m (8′-2¼″)	1.44 m (4′-8″)	830 (32¼)	559 (22)	1.23 m (4′-0″)	1.29 m (4′-2¼″)	90 (3½)	40 (1½)	60°	1.5 (1.9)	893 (38)	712 (28)	1.49 m (5′-0″)	3.1 m (10′-6″)	36	57 (90)
	DS 600-1½ (DS 24-1½)	600 (24)	870 (34)	410 (16)	990 (39)	880 (34¾)	3.1 m (10′-1¼″)	1.74 m (5′-8″)	1.01 m (3′-3¼″)	762 (30)	1.52 m (4′-11½″)	1.58 m (5′-1¾″)	90 (3½)	40 (1½)	60°	2.1 (2.7)	1.06 m (3′-9″)	949 (37)	1.78 m (5′-11″)	3.79 m (12′-9″)	40	64 (100)
	DS 750-1½ (DS 30-1½)	750 (30)	990 (39)	480 (19)	1140 (3′-9″)	1055 (3′-5½″)	3.55 m (11′-7¾″)	1.98 m (6′-6″)	1.15 m (3′-9″)	914 (36)	1.75 m (5′-8¾″)	1.8 m (5′-11″)	90 (3½)	40 (1½)	60°	2.7 (3.5)	1.2 m (4′-4″)	1.12 m (3′-8″)	2.02 m (6′-9″)	4.34 m (14′-9″)	46	74 (110)
	DS 900-1½ (DS 36-1½)	900 (36)	1140 (3′-9″)	560 (22)	1320 (4′-4″)	1292 (4′-2¾″)	4.13 m (13′-7″)	2.28 m (7′-6″)	1.32 m (4′-4″)	1.119 m (3′-8″)	2.04 m (6′-8½″)	2.09 m (6′-10½″)	90 (3½)	40 (1½)	60°	3.5 (4.6)	1.37 m (5′-0″)	1.36 m (4′-5″)	2.32 m (7′-10″)	5.05 m (17′-3″)	54	86 (130)

All dimensions are in millimeters (inches) unless otherwise shown.

All slope ratios are expressed as units of vertical displacement to units of horizontal displacement (V:H).

Illinois Department of Transportation

APPROVED January 1, 1997
Ralph E. Anderson
ENGINEER OF BRIDGES AND STRUCTURES

APPROVED January 1, 1997
Gary Hamdal
ENGINEER OF DESIGN AND ENVIRONMENT

ISSUED 1-1-97

REINFORCED CONCRETE END SECTIONS FOR PIPE CULVERTS
375 mm (15″) THRU 900 mm (36″) DIA.
SKEWED WITH ROADWAY
(Sheet 2 of 5)

STANDARD 542201

WINGS FOR 1:1½ SLOPE

Skew Angle	Design No.	Nominal Dia. For Pipe	DIMENSIONS FOR CONCRETE A	B	C	D	E	F	G	H	J	K	M	N	α	Concrete 2 End Secs. m³ (yd³)	Reinf. Bars - 2 End Secs. h - bars o	p	q	Lgth.	v-bars No.	Bars 2 End Secs. kg (lbs)
35°	DS 375-1½ (DS 15-1½)	375 (15)	720 (28)	260 (10)	740 (29)	590 (23¼)	2.55 m (8'-3¾")	1.56 m (5'-0¾")	820 (31½)	483 (19)	1.24 m (4'-0½")	1.31 m (4'-3")	90 (3¾)	40 (1½)	55°	1.4 (1.8)	855 (37)	658 (26)	1.57 m (5'-3")	3.09 m (10'-6")	36	57 (90)
	DS 450-1½ (DS 18-1½)	450 (18)	720 (28)	330 (13)	810 (32)	682 (27)	2.65 m (8'-7¼")	1.56 m (5'-0¾")	820 (31½)	559 (22)	1.29 m (4'-2¼")	1.36 m (4'-5")	90 (3¾)	40 (1½)	55°	1.5 (2.0)	876 (37)	750 (29)	1.61 m (5'-3")	3.24 m (10'-9")	36	57 (90)
	DS 600-1½ (DS 24-1½)	600 (24)	870 (34)	410 (16)	990 (39)	930 (36½)	3.26 m (10'-7¾")	1.88 m (6'-1¾")	980 (38¼)	762 (30)	1.6 m (5'-2½")	1.66 m (5'-5¼")	90 (3¾)	40 (1½)	55°	2.2 (2.9)	1.04 m (3'-8")	1.0 m (39)	1.92 m (6'-4")	3.96 m (13'-3")	40	64 (100)
	DS 750-1½ (DS 30-1½)	750 (30)	990 (39)	480 (19)	1140 (3'-9")	1.116 m (3'-8")	3.74 m (12'-3¼")	2.15 m (7'-0½")	1.12 m (3'-8")	914 (36)	1.84 m (6'-0¼")	1.9 m (6'-3")	90 (3¾)	40 (1½)	55°	2.8 (3.7)	1.17 m (4'-2")	1.18 m (3'-11")	2.18 m (7'-2")	4.54 m (15'-3")	50	80 (120)
	DS 900-1½ (DS 36-1½)	900 (36)	1140 (3'-9")	560 (22)	1320 (4'-4")	1.366 m (4'-5¾")	4.35 m (14'-3¾")	2.47 m (8'-1½")	1.3 m (4'-2¾")	1.119 m (3'-8")	2.14 m (7'-0½")	2.21 m (7'-3¼")	90 (3¾)	40 (1½)	55°	3.8 (4.9)	1.34 m (4'-11")	1.43 m (4'-8")	2.51 m (8'-5")	5.29 m (18'-0")	56	90 (140)
40°	DS 375-1½ (DS 15-1½)	375 (15)	720 (28)	260 (10)	740 (29)	631 (24¾)	2.71 m (8'-10")	1.71 m (5'-6¼")	780 (31)	483 (19)	1.32 m (4'-3½")	1.39 m (4'-6½")	100 (3¾)	40 (1¼)	50°	1.5 (1.9)	840 (37)	700 (27)	1.71 m (5'-8")	3.25 m (11'-0")	38	60 (90)
	DS 450-1½ (DS 18-1½)	450 (18)	720 (28)	330 (13)	810 (32)	730 (28¾)	2.81 m (9'-1¾")	1.71 m (5'-6¼")	780 (31)	559 (22)	1.37 m (4'-5½")	1.44 m (4'-8¼")	100 (3¾)	40 (1¼)	50°	1.7 (2.2)	860 (36)	798 (31)	1.76 m (5'-8")	3.41 m (11'-3")	38	61 (90)
	DS 600-1½ (DS 24-1½)	600 (24)	870 (34)	410 (16)	990 (39)	995 (3'-3¼")	3.47 m (11'-4")	2.08 m (6'-8½")	960 (37½)	762 (30)	1.7 m (5'-6½")	1.77 m (5'-9½")	100 (3¾)	40 (1¼)	50°	2.4 (3.1)	1.02 m (3'-8")	1.07 m (3'-6")	2.1 m (6'-10")	4.18 m (14'-0")	48	76 (110)
	DS 750-1½ (DS 30-1½)	750 (30)	990 (39)	480 (19)	1140 (3'-9")	1.193 m (3'-11")	3.98 m (13'-0¾")	2.35 m (7'-8¼")	1.1 m (3'-7")	914 (36)	1.95 m (6'-5")	2.03 m (6'-7¾")	100 (3¾)	40 (1¼)	50°	3.1 (4.0)	1.15 m (4'-2")	1.26 m (4'-2")	2.38 m (7'-11")	4.79 m (16'-3")	54	86 (130)
	DS 900-1½ (DS 36-1½)	900 (36)	1140 (3'-9")	560 (22)	1320 (4'-4")	1.461 m (4'-9½")	4.64 m (15'-3")	2.7 m (8'-10½")	1.26 m (4'-1¾")	1.119 m (3'-8")	2.28 m (7'-6")	2.35 m (7'-9")	100 (3¾)	40 (1¼)	50°	4.1 (5.3)	1.32 m (4'-10")	1.53 m (5'-0")	2.74 m (9'-2")	5.59 m (19'-0")	62	99 (150)
45°	DS 375-1½ (DS 15-1½)	375 (15)	720 (28)	260 (10)	740 (29)	683 (27)	2.92 m (9'-6")	1.88 m (6'-1¼")	780 (30¼)	483 (19)	1.42 m (4'-7½")	1.5 m (4'-10½")	100 (4)	30 (1¼)	45°	1.6 (2.1)	828 (36)	753 (29)	1.89 m (6'-1")	3.47 m (11'-6")	40	64 (100)
	DS 450-1½ (DS 18-1½)	450 (18)	720 (28)	330 (13)	810 (32)	791 (31)	3.03 m (9'-10¼")	1.88 m (6'-1¼")	780 (30¼)	559 (22)	1.47 m (4'-9½")	1.56 m (5'-0¾")	100 (4)	30 (1¼)	45°	1.8 (2.4)	847 (36)	859 (34)	1.94 m (6'-2")	3.64 m (12'-0")	44	70 (100)
	DS 600-1½ (DS 24-1½)	600 (24)	870 (34)	410 (16)	990 (39)	1.078 m (3'-6½")	3.74 m (12'-2½")	2.28 m (7'-4¾")	950 (36¾)	762 (30)	1.83 m (5'-11½")	1.91 m (6'-3")	100 (4)	30 (1¼)	45°	2.6 (3.4)	1.0 m (3'-8")	1.15 m (3'-9")	2.31 m (7'-7")	4.47 m (15'-0")	50	80 (120)
	DS 750-1½ (DS 30-1½)	750 (30)	990 (39)	480 (19)	1140 (3'-9")	1.293 m (4'-3")	4.29 m (14'-1")	2.59 m (8'-6")	1.08 m (3'-6¼")	914 (36)	2.1 m (6'-11")	2.19 m (7'-2")	100 (4)	30 (1¼)	45°	3.4 (4.4)	1.13 m (4'-2")	1.36 m (4'-5")	2.63 m (8'-8")	5.12 m (17'-3")	62	98 (150)
	DS 900-1½ (DS 36-1½)	900 (36)	1140 (3'-9")	560 (22)	1320 (4'-4")	1.583 m (5'-2¼")	5.01 m (16'-5¼")	2.98 m (9'-9½")	1.24 m (4'-0¾")	1.119 m (3'-8")	2.46 m (8'-1")	2.55 m (8'-4¼")	100 (4)	30 (1¼)	45°	4.4 (5.7)	1.3 m (4'-10")	1.65 m (5'-5")	3.02 m (10'-0")	5.97 m (20'-3")	66	105 (160)
50°	DS 375-1½ (DS 15-1½)	375 (15)	720 (28)	260 (10)	740 (29)	751 (29½)	3.18 m (10'-4½")	2.11 m (6'-10")	770 (29¾)	483 (19)	1.55 m (5'-0½")	1.64 m (5'-4")	110 (4¼)	30 (1)	40°	1.8 (2.3)	817 (35)	822 (32)	2.11 m (6'-11")	3.75 m (12'-6")	46	73 (110)
	DS 450-1½ (DS 18-1½)	450 (18)	720 (28)	330 (13)	810 (32)	870 (34¼)	3.31 m (10'-9")	2.11 m (6'-10")	770 (29¾)	559 (22)	1.61 m (5'-2¾")	1.7 m (5'-6¼")	110 (4¼)	30 (1)	40°	2.0 (2.6)	836 (36)	939 (37)	2.16 m (6'-11")	3.94 m (13'-0")	46	73 (110)
	DS 600-1½ (DS 24-1½)	600 (24)	870 (34)	410 (16)	990 (39)	1.185 m (3'-10¾")	4.08 m (13'-4¼")	2.55 m (8'-3½")	930 (36¼)	762 (30)	2 m (6'-6¼")	2.09 m (6'-10")	110 (4¼)	30 (1)	40°	2.8 (3.7)	990 (3'-7")	1.26 m (4'-1")	2.58 m (8'-4")	4.83 m (16'-0")	56	89 (130)
	DS 750-1½ (DS 30-1½)	750 (30)	990 (39)	480 (19)	1140 (3'-9")	1.422 m (4'-8")	4.7 m (15'-5")	2.9 m (9'-6")	1.06 m (3'-5½")	914 (36)	2.3 m (7'-6¾")	2.39 m (7'-10¼")	110 (4¼)	30 (1)	40°	3.7 (4.8)	1.12 m (4'-1")	1.49 m (4'-10")	2.94 m (9'-7")	5.54 m (18'-6")	66	105 (160)
	DS 900-1½ (DS 36-1½)	900 (36)	1140 (3'-9")	560 (22)	1320 (4'-4")	1.741 m (5'-8½")	5.48 m (18'-0¼")	3.34 m (10'-11½")	1.22 m (4'-0")	1.119 m (3'-8")	2.7 m (8'-10¼")	2.78 m (9'-2")	110 (4¼)	30 (1)	40°	4.8 (6.3)	1.28 m (4'-9")	1.81 m (5'-11")	3.38 m (11'-1")	6.47 m (21'-9")	74	118 (180)
55°	DS 375-1½ (DS 15-1½)	375 (15)	720 (28)	260 (10)	740 (29)	842 (33)	3.54 m (11'-6¼")	2.4 m (7'-9")	760 (29¼)	483 (19)	1.72 m (5'-7¼")	1.82 m (5'-11")	110 (4½)	30 (1)	35°	2.0 (2.6)	809 (35)	914 (36)	2.4 m (7'-10")	4.12 m (13'-9")	50	79 (120)
	DS 450-1½ (DS 18-1½)	450 (18)	720 (28)	330 (13)	810 (32)	975 (38¼)	3.68 m (11'-11½")	2.4 m (7'-9")	760 (29¼)	559 (22)	1.79 m (5'-9¾")	1.89 m (6'-1¾")	110 (4½)	30 (1)	35°	2.2 (2.9)	827 (36)	1.05 m (3'-5")	2.46 m (7'-10")	4.33 m (14'-3")	50	80 (120)
	DS 600-1½ (DS 24-1½)	600 (24)	870 (34)	410 (16)	990 (39)	1.329 m (4'-4¼")	4.55 m (14'-10½")	2.9 m (9'-5")	910 (35¾)	762 (30)	2.23 m (7'-3¼")	2.32 m (7'-7¼")	110 (4½)	30 (1)	35°	3.2 (4.2)	978 (3'-6")	1.4 m (4'-7")	2.94 m (9'-5")	5.32 m (17'-6")	62	99 (150)
	DS 750-1½ (DS 30-1½)	750 (30)	990 (39)	480 (19)	1140 (3'-9")	1.594 m (5'-2¾")	5.24 m (17'-2¼")	3.3 m (10'-9¾")	1.04 m (3'-5")	914 (36)	2.57 m (8'-5¼")	2.67 m (8'-9")	110 (4½)	30 (1)	35°	4.1 (5.4)	1.1 m (4'-1")	1.66 m (5'-6")	3.33 m (10'-11")	6.1 m (20'-6")	74	117 (180)
	DS 900-1½ (DS 36-1½)	900 (36)	1140 (3'-9")	560 (22)	1320 (4'-4")	1.951 m (6'-4¾")	6.12 m (20'-1¼")	3.79 m (12'-5¾")	1.2 m (3'-11¼")	1.119 m (3'-8")	3.01 m (9'-10¾")	3.11 m (10'-2½")	110 (4½)	30 (1)	35°	5.4 (7.1)	1.26 m (4'-9")	2.02 m (6'-7")	3.84 m (12'-8")	7.12 m (24'-0")	86	136 (200)
60°	DS 375-1½ (DS 15-1½)	375 (15)	720 (28)	260 (10)	740 (29)	966 (38)	4.03 m (13'-1¼")	2.78 m (9'-0¼")	750 (29)	483 (19)	1.96 m (6'-4½")	2.07 m (6'-8¾")	120 (4½)	20 (0¾)	30°	2.2 (2.9)	802 (34)	1.04 m (3'-5")	2.78 m (9'-0")	4.62 m (15'-3")	54	86 (130)
	DS 450-1½ (DS 18-1½)	450 (18)	720 (28)	330 (13)	810 (32)	1.118 m (3'-8")	4.18 m (13'-7¼")	2.78 m (9'-0¼")	750 (29)	559 (22)	2.04 m (6'-7½")	2.14 m (6'-11¾")	120 (4½)	20 (0¾)	30°	2.5 (3.2)	820 (34)	1.19 m (3'-11")	2.85 m (9'-0")	4.86 m (15'-9")	58	92 (140)
	DS 600-1½ (DS 24-1½)	600 (24)	870 (34)	410 (16)	990 (39)	1.524 m (5'-0")	5.19 m (16'-11¼")	3.36 m (10'-11¼")	900 (35¼)	762 (30)	2.04 m (8'-3½")	2.65 m (8'-7¾")	120 (4½)	20 (0¾)	30°	3.6 (4.7)	969 (3'-6")	1.6 m (5'-3")	3.41 m (11'-0")	5.98 m (19'-9")	72	114 (170)
	DS 750-1½ (DS 30-1½)	750 (30)	990 (39)	480 (19)	1140 (3'-9")	1.828 m (6'-0")	5.97 m (19'-7¼")	3.83 m (12'-6¾")	1.03 m (3'-4½")	914 (36)	2.93 m (9'-7½")	3.04 m (9'-11¾")	120 (4½)	20 (0¾)	30°	4.7 (6.1)	1.09 m (4'-1")	1.9 m (6'-3")	3.87 m (12'-8")	6.86 m (23'-0")	82	130 (200)
	DS 900-1½ (DS 36-1½)	900 (36)	1140 (3'-9")	560 (22)	1320 (4'-4")	2.238 m (7'-4")	6.98 m (22'-11¼")	4.41 m (14'-5¾")	1.18 m (3'-10½")	1.119 m (3'-8")	3.44 m (11'-3½")	3.54 m (11'-7¾")	119 (4½)	20 (0¾)	30°	6.2 (8.1)	1.25 m (4'-7")	2.31 m (7'-7")	4.46 m (14'-7")	8.02 m (26'-9")	98	155 (230)

All dimensions are in millimeters (inches) unless otherwise shown.

All slope ratios are expressed as units of vertical displacement to units of horizontal displacement (V:H).

Illinois Department of Transportation

APPROVED January 1, 1997
Ralph E. Anderson
ENGINEER OF BRIDGES AND STRUCTURES

APPROVED January 1, 1997
Gary Hamdorf
ENGINEER OF DESIGN AND ENVIRONMENT

ISSUED 1-1-97

REINFORCED CONCRETE END SECTIONS
FOR PIPE CULVERTS
375 mm (15") THRU 900 mm (36") DIA.
SKEWED WITH ROADWAY
(Sheet 3 of 5)

STANDARD 542201

WINGS FOR 1:2 SLOPE

Skew Angle	Design No.	Nominal Dia. For Pipe	DIMENSIONS FOR CONCRETE A	B	C	D	E	F	G	H	J	K	M	N	α	Concrete 2 End Secs. m^3 (yd^3)	Reinf. Bars - 2 End Secs. h - bars o	p	q	Lgth.	v-bars No.	Bars 2 End Secs. kg (lbs)
5°	DS 375-2 (DS 15-2)	375 (15)	960 (38)	260 (10)	740 (29)	485 (19)	2.63 m (8'-7¾")	1.42 m (4'-8¼")	1.31 m (4'-3½")	483 (19)	1.31 m (4'-3¾")	1.32 m (4'-4")	70 (2¾)	60 (2¼)	85°	1.5 (1.9)	1.33 m (4'-7")	551 (21)	1.45 m (4'-11")	3.33 m (11'-3")	34	55 (80)
	DS 450-2 (DS 18-2)	450 (18)	960 (38)	330 (13)	810 (32)	561 (22)	2.7 m (8'-10¾")	1.42 m (4'-8¼")	1.31 m (4'-3½")	559 (22)	1.35 m (4'-5¼")	1.35 m (4'-5½")	70 (2¾)	60 (2¼)	85°	1.5 (2.0)	1.36 m (4'-7")	626 (24)	1.48 m (4'-11")	3.47 m (11'-6")	34	55 (80)
	DS 600-2 (DS 24-2)	600 (24)	1.16 m (3'-10")	410 (16)	990 (39)	765 (30)	3.31 m (10'-11")	1.72 m (5'-8")	1.58 m (5'-2½")	762 (30)	1.65 m (5'-5¼")	1.66 m (5'-5¾")	70 (2¾)	60 (2¼)	85°	2.2 (2.9)	1.62 m (5'-5")	832 (32)	1.77 m (5'-11")	4.22 m (14'-0")	42	68 (100)
	DS 750-2 (DS 30-2)	750 (30)	1.32 m (4'-4")	480 (19)	1.14 m (3'-9")	917 (36)	3.78 m (12'-5")	1.96 m (6'-5")	1.79 m (5'-10½")	914 (36)	1.89 m (6'-2¼")	1.89 m (6'-2¾")	70 (2¾)	60 (2¼)	85°	2.8 (3.7)	1.84 m (6'-3")	983 (39)	2.0 m (6'-9")	4.83 m (16'-3")	48	77 (120)
	DS 900-2 (DS 36-2)	900 (36)	1.52 m (5'-0")	560 (22)	1.32 m (4'-4")	1.123 m (3'-8¼")	4.39 m (14'-5")	2.25 m (7'-4¾")	2.07 m (6'-9¼")	1.119 m (3'-8")	2.19 m (7'-2¼")	2.2 m (7'-2¾")	70 (2¾)	60 (2¼)	85°	3.4 (4.5)	2.12 m (7'-2")	1.19 m (3'-11")	2.3 m (7'-8")	5.6 m (18'-9")	54	87 (130)
10°	DS 375-2 (DS 15-2)	375 (15)	960 (38)	260 (10)	740 (29)	490 (19¼)	2.65 m (8'-9")	1.5 m (4'-11")	1.26 m (4'-1½")	483 (19)	1.32 m (4'-4")	1.33 m (4'-5")	70 (2¾)	60 (2¼)	80°	1.5 (2.0)	1.28 m (4'-4")	557 (22)	1.52 m (5'-1")	3.36 m (11'-3")	34	55 (80)
	DS 450-2 (DS 18-2)	450 (18)	960 (38)	330 (13)	810 (32)	568 (22¼)	2.73 m (9'-0")	1.5 m (4'-11")	1.26 m (4'-1½")	559 (22)	1.36 m (4'-5¾")	1.37 m (4'-6¼")	70 (2¾)	60 (2¼)	80°	1.6 (2.1)	1.32 m (4'-4")	633 (25)	1.55 m (5'-1")	3.5 m (11'-6")	34	55 (80)
	DS 600-2 (DS 24-2)	600 (24)	1.16 m (3'-10")	410 (16)	990 (39)	774 (30½)	3.34 m (11'-0¼")	1.81 m (5'-11½")	1.52 m (5'-0")	762 (30)	1.66 m (5'-5¾")	1.68 m (5'-6½")	70 (2¾)	60 (2¼)	80°	2.3 (3.0)	1.57 m (5'-4")	841 (33)	1.85 m (6'-2")	4.26 m (14'-3")	42	68 (100)
	DS 750-2 (DS 30-2)	750 (30)	1.32 m (4'-4")	480 (19)	1.14 m (3'-9")	928 (36½)	3.82 m (12'-6¾")	2.06 m (6'-9")	1.73 m (5'-8")	914 (36)	1.9 m (6'-3")	1.92 m (6'-3¾")	70 (2¾)	60 (2¼)	80°	2.9 (3.8)	1.78 m (6'-0")	993 (39)	2.1 m (7'-0")	4.87 m (16'-3")	48	77 (120)
	DS 900-2 (DS 36-2)	900 (36)	1.52 m (5'-0")	560 (22)	1.32 m (4'-4")	1.136 m (3'-8¾")	4.44 m (14'-7")	2.37 m (7'-9¼")	1.99 m (6'-6¼")	1.119 m (3'-8")	2.21 m (7'-3")	2.23 m (7'-4")	70 (2¾)	60 (2¼)	80°	3.6 (4.7)	2.04 m (7'-0")	1.2 m (3'-11")	2.42 m (8'-1")	5.66 m (19'-0")	54	87 (130)
15°	DS 375-2 (DS 15-2)	375 (15)	960 (38)	260 (10)	740 (29)	500 (19¾)	2.7 m (8'-10¾")	1.58 m (5'-2½")	1.21 m (4'-0")	483 (19)	1.34 m (4'-4¾")	1.36 m (4'-6")	80 (3)	50 (2)	75°	1.5 (2.0)	1.24 m (4'-3")	567 (22)	1.6 m (5'-5")	3.41 m (11'-6")	34	55 (80)
	DS 450-2 (DS 18-2)	450 (18)	960 (38)	330 (13)	810 (32)	579 (22¾)	2.78 m (9'-2")	1.58 m (5'-2½")	1.21 m (4'-0")	559 (22)	1.38 m (4'-6½")	1.4 m (4'-7½")	80 (3)	50 (2)	75°	1.7 (2.2)	1.27 m (4'-3")	644 (25)	1.64 m (5'-5")	3.55 m (11'-9")	34	55 (80)
	DS 600-2 (DS 24-2)	600 (24)	1.16 m (3'-10")	410 (16)	990 (39)	789 (31)	3.4 m (11'-2¾")	1.91 m (6'-3½")	1.47 m (4'-10")	762 (30)	1.69 m (5'-6¾")	1.72 m (5'-8")	80 (3)	50 (2)	75°	2.4 (3.1)	1.52 m (5'-2")	857 (34)	1.95 m (6'-6")	4.32 m (14'-6")	42	68 (100)
	DS 750-2 (DS 30-2)	750 (30)	1.32 m (4'-4")	480 (19)	1.14 m (3'-9")	946 (37¼)	3.89 m (12'-9¼")	2.17 m (7'-1½")	1.67 m (5'-5½")	914 (36)	1.93 m (6'-4")	1.96 m (6'-5¼")	80 (3)	50 (2)	75°	3.0 (3.9)	1.72 m (5'-10")	1.01 m (3'-4")	2.21 m (7'-4")	4.94 m (16'-6")	52	83 (130)
	DS 900-2 (DS 36-2)	900 (36)	1.52 m (5'-0")	560 (22)	1.32 m (4'-4")	1.158 m (3'-9½")	4.52 m (14'-10¼")	2.5 m (8'-2½")	1.92 m (6'-3½")	1.119 m (3'-8")	2.25 m (7'-4½")	2.27 m (7'-5¾")	80 (3)	50 (2)	75°	3.8 (5.0)	1.97 m (6'-9")	1.22 m (4'-0")	2.55 m (8'-6")	5.74 m (19'-3")	56	90 (140)
20°	DS 375-2 (DS 15-2)	375 (15)	960 (38)	260 (10)	740 (29)	514 (20¼)	2.77 m (9'-1½")	1.68 m (5'-6¼")	1.18 m (3'-10½")	483 (19)	1.37 m (4'-6")	1.4 m (4'-7½")	80 (3)	50 (2)	70°	1.6 (2.1)	1.21 m (4'-2")	581 (23)	1.69 m (5'-8")	3.48 m (11'-9")	36	58 (90)
	DS 450-2 (DS 18-2)	450 (18)	960 (38)	330 (13)	810 (32)	595 (23½)	2.85 m (9'-4½")	1.68 m (5'-6¼")	1.18 m (3'-10½")	559 (22)	1.41 m (4'-7½")	1.44 m (4'-9")	80 (3)	50 (2)	70°	1.8 (2.3)	1.24 m (4'-2")	661 (26)	1.73 m (5'-8")	3.63 m (12'-0")	36	58 (90)
	DS 600-2 (DS 24-2)	600 (24)	1.16 m (3'-10")	410 (16)	990 (39)	811 (32)	3.49 m (11'-6¼")	2.03 m (6'-8¼")	1.42 m (4'-8¼")	762 (30)	1.73 m (5'-8½")	1.76 m (5'-9¾")	80 (3)	50 (2)	70°	2.4 (3.2)	1.47 m (5'-0")	879 (35)	2.07 m (6'-10")	4.42 m (14'-9")	48	77 (120)
	DS 750-2 (DS 30-2)	750 (30)	1.32 m (4'-4")	480 (19)	1.14 m (3'-9")	973 (38¼)	3.99 m (13'-1¼")	2.3 m (7'-6¾")	1.61 m (5'-3½")	914 (36)	1.98 m (6'-6")	2.01 m (6'-7¼")	80 (3)	50 (2)	70°	3.1 (4.1)	1.67 m (5'-9")	1.04 m (3'-5")	2.35 m (7'-10")	5.05 m (17'-0")	52	84 (130)
	DS 900-2 (DS 36-2)	900 (36)	1.52 m (5'-0")	560 (22)	1.32 m (4'-4")	1.191 m (3'-10¾")	4.64 m (15'-3")	2.65 m (8'-8½")	1.86 m (6'-1¼")	1.119 m (3'-8")	2.3 m (7'-6¾")	2.34 m (7'-8¼")	80 (3)	50 (2)	70°	4.1 (5.3)	1.91 m (6'-6")	1.26 m (4'-1")	2.7 m (8'-11")	5.87 m (19'-6")	58	94 (140)
25°	DS 375-2 (DS 15-2)	375 (15)	960 (38)	260 (10)	740 (29)	533 (21)	2.86 m (9'-5")	1.79 m (5'-10¾")	1.14 m (3'-9")	483 (19)	1.41 m (4'-7½")	1.45 m (4'-9½")	90 (3¼)	50 (1¾)	65°	1.7 (2.2)	1.12 m (4'-1")	600 (23)	1.8 m (6'-0")	3.58 m (12'-0")	38	61 (90)
	DS 450-2 (DS 18-2)	450 (18)	960 (38)	330 (13)	810 (32)	617 (24¼)	2.95 m (9'-8½")	1.79 m (5'-10¾")	1.14 m (3'-9")	559 (22)	1.45 m (4'-9¼")	1.5 m (4'-11¼")	90 (3¼)	50 (1¾)	65°	1.8 (2.4)	1.2 m (4'-0")	683 (27)	1.85 m (6'-0")	3.73 m (12'-3")	42	67 (100)
	DS 600-2 (DS 24-2)	600 (24)	1.16 m (3'-10")	410 (16)	990 (39)	841 (33)	3.61 m (11'-11")	2.16 m (7'-1½")	1.38 m (4'-6½")	762 (30)	1.78 m (5'-10½")	1.83 m (6'-0½")	90 (3¼)	50 (1¾)	65°	2.6 (3.4)	1.43 m (4'-11")	909 (36)	2.2 m (7'-4")	4.55 m (15'-3")	48	77 (120)
	DS 750-2 (DS 30-2)	750 (30)	1.32 m (4'-4")	480 (19)	1.14 m (3'-9")	1.008 m (3'-3¾")	4.13 m (13'-6¾")	2.46 m (8'-0¾")	1.57 m (5'-1¾")	914 (36)	2.04 m (6'-8½")	2.09 m (6'-10¼")	90 (3¼)	50 (1¾)	65°	3.3 (4.3)	1.62 m (5'-6")	1.08 m (3'-6")	2.5 m (8'-3")	5.2 m (17'-3")	52	84 (130)
	DS 900-2 (DS 36-2)	900 (36)	1.52 m (5'-0")	560 (22)	1.32 m (4'-4")	1.235 m (4'-0½")	4.8 m (15'-9¼")	2.83 m (9'-3¾")	1.81 m (5'-11¼")	1.119 m (3'-8")	2.38 m (7'-9¾")	2.42 m (7'-11½")	90 (3¼)	50 (1¾)	65°	4.3 (5.6)	1.86 m (6'-5")	1.3 m (4'-3")	2.88 m (9'-7")	6.04 m (20'-3")	60	97 (150)
30°	DS 375-2 (DS 15-2)	375 (15)	960 (38)	260 (10)	740 (29)	558 (22)	2.98 m (9'-9¾")	1.92 m (6'-4")	1.11 m (3'-8")	483 (19)	1.46 m (4'-9¾")	1.52 m (5'-0")	90 (3½)	40 (1½)	60°	1.8 (2.3)	1.15 m (4'-0")	626 (24)	1.93 m (6'-6")	3.71 m (12'-6")	42	67 (100)
	DS 450-2 (DS 18-2)	450 (18)	960 (38)	330 (13)	810 (32)	645 (25½)	3.07 m (10'-1½")	1.92 m (6'-4")	1.11 m (3'-8")	559 (22)	1.51 m (4'-11½")	1.56 m (5'-2")	90 (3½)	40 (1½)	60°	1.9 (2.5)	1.18 m (4'-0")	712 (28)	1.98 m (6'-5")	3.87 m (12'-9")	42	67 (100)
	DS 600-2 (DS 24-2)	600 (24)	1.16 m (3'-10")	410 (16)	990 (39)	880 (34¾)	3.77 m (12'-5")	2.32 m (7'-8")	1.34 m (4'-5")	762 (30)	1.86 m (6'-1½")	1.91 m (6'-3½")	90 (3½)	40 (1½)	60°	2.8 (3.6)	1.4 m (4'-10")	949 (37)	2.37 m (7'-10")	4.71 m (15'-9")	52	83 (130)
	DS 750-2 (DS 30-2)	750 (30)	1.32 m (4'-4")	480 (19)	1.14 m (3'-9")	1.055 m (3'-5½")	4.31 m (14'-1¾")	2.64 m (8'-8")	1.53 m (5'-0")	914 (36)	2.13 m (6'-11¾")	2.18 m (7'-2")	90 (3½)	40 (1½)	60°	3.4 (4.5)	1.58 m (5'-6")	1.12 m (3'-8")	2.69 m (8'-10")	5.39 m (18'-0")	56	90 (140)
	DS 900-2 (DS 36-2)	900 (36)	1.52 m (5'-0")	560 (22)	1.32 m (4'-4")	1.292 m (4'-2¾")	5.01 m (16'-5½")	3.04 m (10'-0")	1.76 m (5'-9¼")	1.119 m (3'-8")	2.48 m (8'-1¾")	2.53 m (8'-3¾")	90 (3½)	40 (1½)	60°	4.5 (5.9)	1.82 m (6'-4")	1.36 m (4'-5")	3.09 m (10'-3")	6.26 m (21'-0")	66	106 (160)

All dimensions are in millimeters (inches) unless otherwise shown.

All slope ratios are expressed as units of vertical displacement to units of horizontal displacement (V:H).

Illinois Department of Transportation

APPROVED January 1, 1997
Ralph E. Anderson
ENGINEER OF BRIDGES AND STRUCTURES

APPROVED January 1, 1997
Gary Hamdorf
ENGINEER OF DESIGN AND ENVIRONMENT

ISSUED 1-1-97

REINFORCED CONCRETE END SECTIONS FOR PIPE CULVERTS
375 mm (15") THRU 900 mm (36") DIA.
SKEWED WITH ROADWAY
(Sheet 4 of 5)

STANDARD 542201

WINGS FOR 1:2 SLOPE

Skew Angle	Design No.	Nominal Dia. For Pipe	DIMENSIONS FOR CONCRETE A	B	C	D	E	F	G	H	J	K	M	N	α	Concrete 2 End Secs. m3 (yd3)	Reinf. Bars - 2 End Secs. h - bars o	p	q	Lgth.	v-bars No.	Bars 2 End Secs. kg (lbs)
35°	DS 375-2 (DS 15-2)	375 (15)	960 (38)	260 (10)	740 (29)	590 (23 1/4)	3.14 m (10′-4″)	2.08 m (6′-10 1/4″)	1.08 m (3′-6 3/4″)	485 (19)	1.54 m (5′-0 3/4″)	1.6 m (5′-3 1/4″)	90 (3 3/4)	40 (1 1/2)	55°	1.8 (2.4)	1.13 m (3′-11″)	658 (26)	2.09 m (6′-11″)	3.87 m (13′-0″)	44	70 (110)
	DS 450-2 (DS 18-2)	450 (18)	960 (38)	330 (13)	810 (32)	683 (27)	3.23 m (10′-7 3/4″)	2.08 m (6′-10 1/4″)	1.09 m (3′-6 3/4″)	559 (22)	1.58 m (5′-2 1/2″)	1.65 m (5′-5 1/4″)	90 (3 3/4)	40 (1 1/2)	55°	2.0 (2.6)	1.15 m (3′-11″)	750 (29)	2.14 m (6′-11″)	4.04 m (13′-3″)	44	70 (110)
	DS 600-2 (DS 24-2)	600 (24)	1.16 m (3′-10″)	410 (16)	990 (39)	930 (36 1/2)	3.97 m (13′-1″)	2.52 m (8′-3 1/2″)	1.31 m (4′-3 3/4″)	762 (30)	1.95 m (6′-5 1/4″)	2.02 m (6′-7 3/4″)	90 (3 3/4)	40 (1 1/2)	55°	2.9 (3.8)	1.37 m (4′-8″)	1.0 m (39)	2.56 m (8′-4″)	4.93 m (16′-3″)	52	83 (130)
	DS 750-2 (DS 30-2)	750 (30)	1.32 m (4′-4″)	480 (19)	1.14 m (3′-9″)	1.116 m (3′-8″)	4.54 m (14′-11″)	2.86 m (9′-4 1/2″)	1.49 m (4′-10 1/2″)	914 (36)	2.24 m (7′-4 1/4″)	2.3 m (7′-6 3/4″)	90 (3 3/4)	40 (1 1/2)	55°	3.7 (4.8)	1.55 m (5′-4″)	1.18 m (3′-11″)	2.9 m (9′-6″)	5.64 m (18′-9″)	60	96 (150)
	DS 900-2 (DS 36-2)	900 (36)	1.52 m (5′-0″)	560 (22)	1.32 m (4′-4″)	1.366 m (4′-5 3/4″)	5.28 m (17′-4 1/4″)	3.29 m (10′-10″)	1.72 m (5′-7 3/4″)	1.119 m (3′-8″)	2.61 m (8′-6 3/4″)	2.67 m (8′-9 1/2″)	90 (3 3/4)	40 (1 1/2)	55°	4.8 (6.3)	1.78 m (6′-1″)	1.43 m (4′-8″)	3.34 m (11′-0″)	6.55 m (21′-9″)	70	112 (170)
40°	DS 375-2 (DS 15-2)	375 (15)	960 (38)	260 (10)	740 (29)	631 (24 3/4)	3.34 m (11′-0″)	2.27 m (7′-6″)	1.06 m (3′-6″)	483 (19)	1.63 m (5′-4 1/2″)	1.71 m (5′-7 1/2″)	100 (3 3/4)	40 (1 1/4)	50°	2.0 (2.6)	1.1 m (3′-10″)	700 (28)	2.28 m (7′-7″)	4.08 m (13′-9″)	48	76 (120)
	DS 450-2 (DS 18-2)	450 (18)	960 (38)	330 (13)	810 (32)	730 (28 3/4)	3.44 m (11′-4″)	2.27 m (7′-6″)	1.08 m (3′-6″)	559 (22)	1.68 m (5′-6 1/2″)	1.76 m (5′-9 1/2″)	100 (3 3/4)	40 (1 1/4)	50°	2.1 (2.8)	1.13 m (3′-10″)	798 (31)	2.34 m (7′-7″)	4.26 m (14′-0″)	48	77 (120)
	DS 600-2 (DS 24-2)	600 (24)	1.16 m (3′-10″)	410 (16)	990 (39)	995 (3′-3 1/4″)	4.23 m (13′-11 1/4″)	2.75 m (9′-0 3/4″)	1.28 m (4′-2 3/4″)	762 (30)	2.08 m (6′-10 1/4″)	2.15 m (7′-1″)	100 (3 3/4)	40 (1 1/4)	50°	3.1 (4.1)	1.34 m (4′-7″)	1.07 m (3′-6″)	2.79 m (9′-2″)	5.2 m (17′-3″)	58	93 (140)
	DS 750-2 (DS 30-2)	750 (30)	1.32 m (4′-4″)	480 (19)	1.14 m (3′-9″)	1.193 m (3′-11″)	4.84 m (15′-10 3/4″)	3.12 m (10′-3″)	1.46 m (4′-9 1/2″)	914 (36)	2.38 m (7′-10″)	2.46 m (8′-0 3/4″)	100 (3 3/4)	40 (1 1/4)	50°	4.0 (5.2)	1.52 m (5′-3″)	1.26 m (4′-2″)	3.17 m (10′-4″)	5.95 m (19′-9″)	64	102 (150)
	DS 900-2 (DS 36-2)	900 (36)	1.52 m (5′-0″)	560 (22)	1.32 m (4′-4″)	1.461 m (4′-9 1/2″)	5.63 m (18′-6″)	3.6 m (11′-10″)	1.68 m (5′-6 1/4″)	1.119 m (3′-8″)	2.78 m (9′-1 1/2″)	2.85 m (9′-4 1/2″)	100 (3 3/4)	40 (1 1/4)	50°	5.2 (6.8)	1.74 m (6′-0″)	1.53 m (5′-0″)	3.65 m (12′-0″)	6.92 m (23′-0″)	78	124 (190)
45°	DS 375-2 (DS 15-2)	375 (15)	960 (38)	260 (10)	740 (29)	683 (27)	3.6 m (11′-10 1/4″)	2.51 m (8′-3 1/4″)	1.04 m (3′-5 1/4″)	483 (19)	1.76 m (5′-9 1/2″)	1.84 m (6′-0 3/4″)	100 (4)	30 (1 1/4)	45°	2.1 (2.8)	1.09 m (3′-9″)	753 (29)	2.51 m (8′-4″)	4.35 m (14′-6″)	48	77 (120)
	DS 450-2 (DS 18-2)	450 (18)	960 (38)	330 (13)	810 (32)	791 (31)	3.7 m (12′-2 1/2″)	2.51 m (8′-3 1/4″)	1.04 m (3′-5 1/4″)	559 (22)	1.81 m (5′-11 1/2″)	1.89 m (6′-3″)	100 (4)	30 (1 1/4)	45°	2.4 (3.1)	1.11 m (3′-10″)	859 (34)	2.58 m (8′-4″)	4.55 m (15′-0″)	52	83 (120)
	DS 600-2 (DS 24-2)	600 (24)	1.16 m (3′-10″)	410 (16)	990 (39)	1.078 m (3′-6 1/2″)	4.56 m (15′-0 1/4″)	3.03 m (10′-0 1/4″)	1.26 m (4′-1 3/4″)	762 (30)	2.24 m (7′-4 1/2″)	2.32 m (7′-7 3/4″)	100 (4)	30 (1 1/4)	45°	3.4 (4.4)	1.32 m (4′-6″)	1.15 m (3′-9″)	3.08 m (10′-0″)	5.55 m (18′-3″)	60	96 (140)
	DS 750-2 (DS 30-2)	750 (30)	1.32 m (4′-4″)	480 (19)	1.14 m (3′-9″)	1.293 m (4′-3″)	5.23 m (17′-1 3/4″)	3.45 m (11′-4″)	1.43 m (4′-8 1/4″)	914 (36)	2.57 m (8′-5 1/4″)	2.66 m (8′-8 1/2″)	100 (4)	30 (1 1/4)	45°	4.3 (5.6)	1.49 m (5′-2″)	1.36 m (4′-5″)	3.5 m (11′-5″)	6.35 m (21′-0″)	72	115 (170)
	DS 900-2 (DS 36-2)	900 (36)	1.52 m (5′-0″)	560 (22)	1.32 m (4′-4″)	1.583 m (5′-2 1/4″)	6.08 m (19′-11 3/4″)	3.97 m (13′-0 3/4″)	1.65 m (5′-5″)	1.119 m (3′-8″)	3. m (9′-10 1/4″)	3.08 m (10′-1 1/2″)	100 (4)	30 (1 1/4)	45°	5.7 (7.4)	1.71 m (5′-11″)	1.65 m (5′-5″)	4.02 m (13′-2″)	7.39 m (24′-6″)	82	131 (200)
50°	DS 375-2 (DS 15-2)	375 (15)	960 (38)	260 (10)	740 (29)	751 (29 1/2)	3.93 m (12′-11 1/2″)	2.81 m (9′-3″)	1.03 m (3′-4 1/2″)	483 (19)	1.92 m (6′-4″)	2.01 m (6′-7 1/2″)	110 (4 1/4)	30 (1)	40°	2.4 (3.1)	1.07 m (3′-9″)	822 (32)	2.81 m (9′-4″)	4.7 m (15′-9″)	54	86 (130)
	DS 450-2 (DS 18-2)	450 (18)	960 (38)	330 (13)	810 (32)	870 (34 1/4)	4.05 m (13′-4 1/4″)	2.81 m (9′-3″)	1.03 m (3′-4 1/2″)	559 (22)	1.98 m (6′-6 1/4″)	2.07 m (6′-10″)	110 (4 1/4)	30 (1)	40°	2.6 (3.4)	1.1 m (3′-8″)	939 (37)	2.88 m (9′-3″)	4.92 m (16′-0″)	54	86 (130)
	DS 600-2 (DS 24-2)	600 (24)	1.16 m (3′-10″)	410 (16)	990 (39)	1.185 m (3′-10 3/4″)	4.99 m (16′-5 1/2″)	3.39 m (11′-2 1/2″)	1.24 m (4′-1″)	762 (30)	2.45 m (8′-1″)	2.54 m (8′-4 1/2″)	110 (4 1/4)	30 (1)	40°	3.7 (4.8)	1.3 m (4′-6″)	1.26 m (4′-1″)	3.44 m (11′-2″)	6.0 m (19′-9″)	68	108 (160)
	DS 750-2 (DS 30-2)	750 (30)	1.32 m (4′-4″)	480 (19)	1.14 m (3′-9″)	1.422 m (4′-8″)	5.72 m (18′-9 1/2″)	3.86 m (12′-8″)	1.41 m (4′-7 1/4″)	914 (36)	2.82 m (9′-3″)	2.91 m (9′-6 1/2″)	110 (4 1/4)	30 (1)	40°	4.7 (6.2)	1.47 m (5′-1″)	1.49 m (4′-11″)	3.91 m (12′-9″)	6.87 m (22′-9″)	78	124 (190)
	DS 900-2 (DS 36-2)	900 (36)	1.52 m (5′-0″)	560 (22)	1.32 m (4′-4″)	1.741 m (5′-8 1/2″)	6.67 m (21′-10 3/4″)	4.45 m (14′-7 1/2″)	1.62 m (5′-3 3/4″)	1.119 m (3′-8″)	3.29 m (10′-9 1/2″)	3.38 m (11′-1 1/4″)	110 (4 1/4)	30 (1)	40°	6.2 (8.1)	1.69 m (5′-10″)	1.81 m (5′-11″)	4.5 m (14′-9″)	8.0 m (26′-6″)	90	143 (220)
55°	DS 375-2 (DS 15-2)	375 (15)	960 (38)	260 (10)	740 (29)	842 (33)	4.38 m (14′-5″)	3.2 m (10′-6 1/4″)	1.01 m (3′-4″)	483 (19)	2.14 m (7′-0 1/2″)	2.24 m (7′-4 1/2″)	110 (4 1/2)	30 (1)	35°	2.6 (3.4)	1.06 m (3′-8″)	914 (36)	3.18 m (10′-7″)	5.17 m (17′-3″)	60	95 (140)
	DS 450-2 (DS 18-2)	450 (18)	960 (38)	330 (13)	810 (32)	975 (38 1/4)	4.38 m (14′-10 1/4″)	3.2 m (10′-6 1/4″)	1.01 m (3′-4″)	559 (22)	2.21 m (7′-3 1/4″)	2.3 m (7′-7″)	110 (4 1/2)	30 (1)	35°	2.8 (3.7)	1.08 m (3′-9″)	1.05 m (3′-5″)	3.27 m (10′-7″)	5.4 m (17′-9″)	60	96 (140)
	DS 600-2 (DS 24-2)	600 (24)	1.16 m (3′-10″)	410 (16)	990 (39)	1.329 m (4′-4 1/4″)	5.56 m (18′-4 1/4″)	3.86 m (12′-9″)	1.22 m (4′-0 1/4″)	762 (30)	2.73 m (9′-0 1/4″)	2.83 m (9′-4″)	110 (4 1/2)	30 (1)	35°	4.1 (5.4)	1.29 m (4′-5″)	1.4 m (4′-7″)	3.91 m (12′-9″)	6.6 m (21′-9″)	74	118 (180)
	DS 750-2 (DS 30-2)	750 (30)	1.32 m (4′-4″)	480 (19)	1.14 m (3′-9″)	1.594 m (5′-2 3/4″)	6.39 m (20′-11 1/2″)	4.39 m (14′-5″)	1.39 m (4′-6 1/2″)	914 (36)	3.15 m (10′-3 3/4″)	3.24 m (10′-7 3/4″)	110 (4 1/2)	30 (1)	35°	5.3 (6.9)	1.45 m (5′-1″)	1.66 m (5′-5″)	4.44 m (14′-6″)	7.56 m (25′-0″)	88	140 (210)
	DS 900-2 (DS 36-2)	900 (36)	1.52 m (5′-0″)	560 (22)	1.32 m (4′-4″)	1.951 m (6′-4 3/4″)	7.44 m (24′-5 1/2″)	5.06 m (16′-7 1/2″)	1.61 m (5′-3″)	1.119 m (3′-8″)	3.67 m (12′-0 3/4″)	3.77 m (12′-4 3/4″)	110 (4 1/2)	30 (1)	35°	7.0 (9.1)	1.67 m (5′-10″)	2.02 m (6′-7″)	5.11 m (16′-7″)	8.8 m (29′-0″)	102	162 (240)
60°	DS 375-2 (DS 15-2)	375 (15)	960 (38)	260 (10)	740 (29)	966 (38)	4.99 m (16′-5 1/4″)	3.71 m (12′-2 3/4″)	1. m (3′-3 1/4″)	483 (19)	2.44 m (8′-0 1/2″)	2.55 m (8′-4 3/4″)	120 (4 1/2)	20 (0 3/4)	30°	3.0 (3.9)	1.05 m (3′-8″)	1.04 m (3′-5″)	3.7 m (12′-2″)	5.79 m (19′-3″)	64	102 (150)
	DS 450-2 (DS 18-2)	450 (18)	960 (38)	330 (13)	810 (32)	1.118 m (3′-8″)	5.15 m (16′-11 1/4″)	3.71 m (12′-2 3/4″)	1. m (3′-3 1/4″)	559 (22)	2.52 m (8′-3 1/2″)	2.63 m (8′-7 3/4″)	120 (4 1/2)	20 (0 3/4)	30°	3.2 (4.2)	1.07 m (3′-8″)	1.19 m (3′-11″)	3.8 m (12′-2″)	6.06 m (19′-9″)	70	111 (170)
	DS 600-2 (DS 24-2)	600 (24)	1.16 m (3′-10″)	410 (16)	990 (39)	1.524 m (5′-0″)	6.35 m (20′-11 1/4″)	4.48 m (14′-9 3/4″)	1.2 m (3′-11 3/4″)	762 (30)	3.12 m (10′-3 1/2″)	3.23 m (10′-7 3/4″)	120 (4 1/2)	20 (0 3/4)	30°	4.7 (6.1)	1.27 m (4′-5″)	1.6 m (5′-3″)	4.54 m (14′-10″)	7.41 m (24′-6″)	86	137 (200)
	DS 750-2 (DS 30-2)	750 (30)	1.32 m (4′-4″)	480 (19)	1.14 m (3′-9″)	1.828 m (6′-0″)	7.29 m (23′-11 1/4″)	5.1 m (16′-9″)	1.37 m (4′-5 3/4″)	914 (36)	3.59 m (11′-9 1/2″)	3.7 m (12′-1 3/4″)	120 (4 1/2)	20 (0 3/4)	30°	6.0 (7.9)	1.44 m (5′-0″)	1.9 m (6′-3″)	5.16 m (16′-9″)	8.5 m (28′-0″)	100	159 (240)
	DS 900-2 (DS 36-2)	900 (36)	1.52 m (5′-0″)	560 (22)	1.32 m (4′-4″)	2.238 m (7′-4″)	8.51 m (27′-11 1/4″)	5.88 m (19′-3 3/4″)	1.57 m (5′-2″)	1.119 m (3′-8″)	4.2 m (13′-9 1/2″)	4.31 m (14′-1 3/4″)	120 (4 1/2)	20 (0 3/4)	30°	8.0 (10.4)	1.65 m (5′-10″)	2.31 m (7′-7″)	5.94 m (19′-4″)	9.89 m (32′-9″)	114	181 (270)

All dimensions are in millimeters (inches) unless otherwise shown.

All slope ratios are expressed as units of vertical displacement to units of horizontal displacement (V:H).

Illinois Department of Transportation

APPROVED January 1, 1997
Ralph E. Anderson
ENGINEER OF BRIDGES AND STRUCTURES

APPROVED January 1, 1997
Gary Hamdorf
ENGINEER OF DESIGN AND ENVIRONMENT

ISSUED 1-1-97

REINFORCED CONCRETE END SECTIONS FOR PIPE CULVERTS 375 mm (15″) THRU 900 mm (36″) DIA. SKEWED WITH ROADWAY

(Sheet 5 of 5)

STANDARD 542201