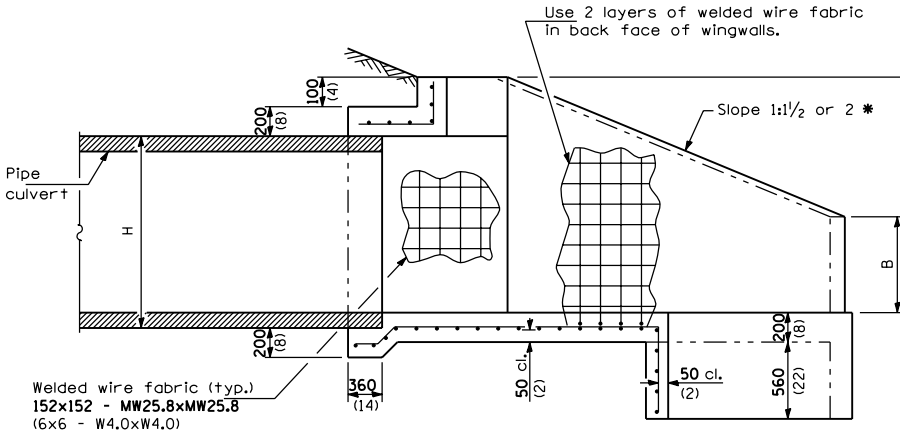

SECTION A-A

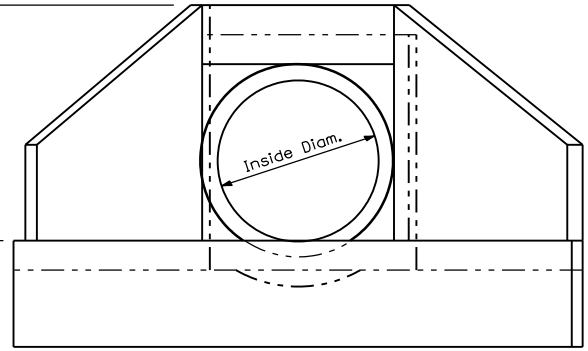

END VIEW

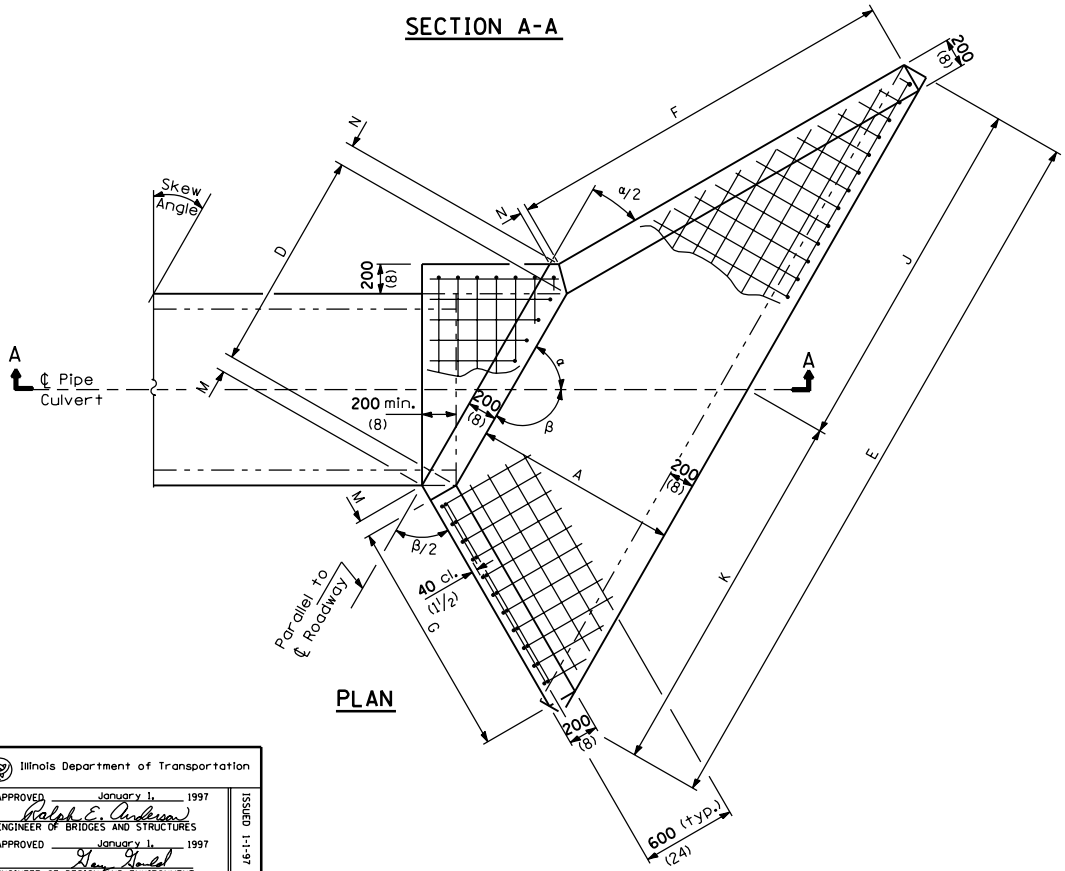

PLAN

GENERAL NOTES

Build tops of headwalls parallel to grade line.

✱ If embankment slope above headwall is flatter than 1:2, provide wings for 1:2 slope.

When lapping sheets of welded wire fabric, the overlap measured between the outermost cross wires of each fabric sheet shall not be less than 202 mm (8").

All slope ratios are expressed as units of vertical displacement to units of horizontal displacement (V:H).

All dimensions are in millimeters (inches) unless otherwise shown.

DATE	REVISIONS
1-1-97	Renum. Standard 1998-2
6-15-94	Moved G.N. to Specs.
	Moved Bill of Mat'l. Added
	slope note & metric.

REINFORCED CONCRETE END SECTIONS FOR PIPE CULVERTS 1050 mm (42") THRU 1500 mm (60") DIA. SKEWED WITH ROADWAY

(Sheet 1 of 5)

STANDARD 542206

Illinois Department of Transportation

APPROVED January 1, 1997
Ralph E. Anderson
ENGINEER OF BRIDGES AND STRUCTURES

APPROVED January 1, 1997
Gary Hamdal
ENGINEER OF DESIGN AND ENVIRONMENT

ISSUED 1-1-97

WINGS FOR 1:1½ SLOPE

Skew Angle	Nominal Dia. For Pipe	DIMENSIONS FOR CONCRETE													Concrete 2 End Secs.	Wire Fabric 2 End Secs.
		A	B	C	D	E	F	G	H	J	K	M	N	α	m^3 (cu. yd.)	m^2 (sq. yd.)
5°	1050 (42)	1.25 m (4′-1″)	660 (26)	1.49 m (4′-10½″)	1.299 m (4′-3¼″)	4.09 m (13′-5″)	1.85 m (6′-0½″)	1.69 m (5′-6½″)	1.295 m (4′-3″)	2.04 m (6′-8¼″)	2.05 m (6′-8¾″)	90 (3½)	80 (3)	85°	4.6 (6.0)	38 (46)
	1200 (48)	1.35 m (4′-6″)	740 (29)	1.64 m (5′-5″)	1.478 m (4′-10¼″)	4.48 m (14′-10″)	2. m (6′-8″)	1.83 m (6′-1¼″)	1.473 m (4′-10″)	2.23 m (7′-4¾″)	2.25 m (7′-5¼″)	90 (3½)	80 (3)	85°	5.5 (7.2)	44 (53)
	1350 (54)	1.56 m (4′-11″)	810 (32)	1.85 m (5′-11½″)	1.657 m (5′-5¼″)	5.08 m (16′-3″)	2.31 m (7′-3¼″)	2.12 m (6′-8″)	1.651 m (5′-5″)	2.53 m (8′-1¼″)	2.55 m (8′-1¾″)	90 (3½)	80 (3)	85°	6.4 (8.4)	55 (65)
	1500 (60)	1.62 m (5′-4″)	890 (35)	1.97 m (6′-6″)	1.835 m (6′-0¼″)	5.37 m (17′-8″)	2.4 m (7′-10¾″)	2.2 m (7′-2¾″)	1.829 m (6′-0″)	2.68 m (8′-9¾″)	2.69 m (8′-10¼″)	90 (3½)	80 (3)	85°	7.5 (9.8)	59 (71)
10°	1050 (42)	1.25 m (4′-1″)	660 (26)	1.49 m (4′-10½″)	1.314 m (4′-3¾″)	4.13 m (13′-6½″)	1.94 m (6′-4¼″)	1.63 m (5′-4″)	1.295 m (4′-3″)	2.05 m (6′-8¾″)	2.08 m (6′-9¾″)	100 (3¾)	80 (3)	80°	4.8 (6.3)	39 (47)
	1200 (48)	1.35 m (4′-6″)	740 (29)	1.64 m (5′-5″)	1.495 m (4′-11″)	4.52 m (15′-0″)	2.1 m (7′-0″)	1.77 m (5′-10½″)	1.473 m (4′-10″)	2.25 m (7′-5½″)	2.27 m (7′-6½″)	100 (3¾)	80 (3)	80°	5.7 (7.5)	45 (54)
	1350 (54)	1.56 m (4′-11″)	810 (32)	1.85 m (5′-11½″)	1.676 m (5′-6″)	5.13 m (16′-5″)	2.43 m (7′-7¾″)	2.04 m (6′-5″)	1.651 m (5′-5″)	2.55 m (8′-2″)	2.58 m (8′-3″)	100 (3¾)	80 (3)	80°	6.7 (8.8)	56 (66)
	1500 (60)	1.62 m (5′-4″)	890 (35)	1.97 m (6′-6″)	1.857 m (6′-1″)	5.43 m (17′-10½″)	2.52 m (8′-3½″)	2.12 m (6′-11½″)	1.829 m (6′-0″)	2.7 m (8′-10¾″)	2.73 m (8′-11¾″)	100 (3¾)	80 (3)	80°	7.9 (10.3)	61 (73)
15°	1050 (42)	1.25 m (4′-1″)	660 (26)	1.49 m (4′-10½″)	1.34 m (4′-4¾″)	4.2 m (13′-9½″)	2.05 m (6′-8½″)	1.57 m (5′-1¾″)	1.295 m (4′-3″)	2.08 m (6′-10″)	2.12 m (6′-11½″)	100 (4)	70 (2¾)	75°	5.0 (6.6)	40 (48)
	1200 (48)	1.35 m (4′-6″)	740 (29)	1.64 m (5′-5″)	1.524 m (5′-0″)	4.6 m (15′-3″)	2.22 m (7′-4¾″)	1.71 m (5′-8″)	1.473 m (4′-10″)	2.28 m (7′-6¾″)	2.32 m (7′-8¼″)	100 (4)	70 (2¾)	75°	6.0 (7.9)	46 (55)
	1350 (54)	1.56 m (4′-11″)	810 (32)	1.85 m (5′-11½″)	1.709 m (5′-7¼″)	5.22 m (16′-8¾″)	2.57 m (8′-1″)	1.97 m (6′-2¼″)	1.651 m (5′-5″)	2.59 m (8′-3¾″)	2.63 m (8′-5″)	100 (4)	70 (2¾)	75°	7.1 (9.3)	57 (68)
	1500 (60)	1.62 m (5′-4″)	890 (35)	1.97 m (6′-6″)	1.893 m (6′-2½″)	5.53 m (18′-2¼″)	2.66 m (8′-9¼″)	2.05 m (6′-8¾″)	1.829 m (6′-0″)	2.75 m (9′-0½″)	2.78 m (9′-1¾″)	100 (4)	70 (2¾)	75°	8.3 (10.8)	62 (75)
20°	1050 (42)	1.25 m (4′-1″)	660 (26)	1.49 m (4′-10½″)	1.378 m (4′-6¼″)	4.31 m (14′-1¾″)	2.17 m (7′-1½″)	1.52 m (4′-11¾″)	1.295 m (4′-3″)	2.13 m (7′-0″)	2.18 m (7′-1¾″)	105 (4¼)	70 (2½)	70°	5.4 (7.0)	41 (49)
	1200 (48)	1.35 m (4′-6″)	740 (29)	1.64 m (5′-5″)	1.567 m (5′-1¾″)	4.72 m (15′-7¾″)	2.36 m (7′-10¼″)	1.65 m (5′-6″)	1.473 m (4′-10″)	2.34 m (7′-9″)	2.38 m (7′-10¾″)	105 (4¼)	70 (2½)	70°	6.4 (8.4)	48 (57)
	1350 (54)	1.56 m (4′-11″)	810 (32)	1.85 m (5′-11½″)	1.756 m (5′-9¼″)	5.36 m (17′-2″)	2.72 m (8′-6¾″)	1.91 m (6′-0″)	1.651 m (5′-5″)	2.65 m (8′-6″)	2.7 m (8′-8″)	105 (4¼)	70 (2½)	70°	7.6 (9.9)	59 (70)
	1500 (60)	1.62 m (5′-4″)	890 (35)	1.97 m (6′-6″)	1.946 m (6′-4½″)	5.68 m (18′-8″)	2.83 m (9′-3½″)	1.98 m (6′-6¼″)	1.829 m (6′-0″)	2.82 m (9′-3″)	2.86 m (9′-5″)	105 (4¼)	70 (2½)	70°	8.8 (11.5)	64 (77)
25°	1050 (42)	1.25 m (4′-1″)	660 (26)	1.49 m (4′-10½″)	1.428 m (4′-8¼″)	4.46 m (14′-7½″)	2.32 m (7′-7¼″)	1.48 m (4′-10″)	1.295 m (4′-3″)	2.22 m (7′-2½″)	2.26 m (7′-5″)	110 (4½)	60 (2¼)	65°	5.7 (7.4)	43 (51)
	1200 (48)	1.35 m (4′-6″)	740 (29)	1.64 m (5′-5″)	1.625 m (5′-4″)	4.88 m (16′-2¼″)	2.52 m (8′-4½″)	1.6 m (5′-4″)	1.473 m (4′-10″)	2.41 m (8′-0″)	2.47 m (8′-2¼″)	110 (4½)	60 (2¼)	65°	6.8 (8.9)	49 (59)
	1350 (54)	1.56 m (4′-11″)	810 (32)	1.85 m (5′-11½″)	1.821 m (5′-11¾″)	5.54 m (17′-9″)	2.91 m (9′-1¾″)	1.85 m (5′-10″)	1.651 m (5′-5″)	2.74 m (8′-9¼″)	2.8 m (8′-11¾″)	110 (4½)	60 (2¼)	65°	8.0 (10.5)	61 (73)
	1500 (60)	1.62 m (5′-4″)	890 (35)	1.97 m (6′-6″)	2.018 m (6′-7½″)	5.87 m (19′-3¾″)	3.02 m (9′-11″)	1.92 m (6′-4″)	1.829 m (6′-0″)	2.90 m (9′-6¾″)	2.97 m (9′-9″)	110 (4½)	60 (2¼)	65°	9.3 (12.2)	67 (80)
30°	1050 (42)	1.25 m (4′-1″)	660 (26)	1.49 m (4′-10½″)	1.495 m (4′-11″)	4.65 m (15′-3″)	2.49 m (8′-2″)	1.44 m (4′-8½″)	1.295 m (4′-3″)	2.29 m (7′-6″)	2.36 m (7′-9″)	120 (4½)	60 (2¼)	60°	6.0 (7.9)	45 (53)
	1200 (48)	1.35 m (4′-6″)	740 (29)	1.64 m (5′-5″)	1.7 m (5′-7″)	5.1 m (16′-10½″)	2.7 m (9′-0″)	1.56 m (5′-2¼″)	1.473 m (4′-10″)	2.51 m (8′-3¾″)	2.59 m (8′-6¾″)	120 (4½)	60 (2¼)	60°	7.3 (9.5)	52 (62)
	1350 (54)	1.56 m (4′-11″)	810 (32)	1.85 m (5′-11½″)	1.906 m (6′-3″)	5.79 m (18′-6¼″)	3.12 m (9′-10″)	1.8 m (5′-8″)	1.651 m (5′-5″)	2.85 m (9′-1¾″)	2.92 m (9′-4½″)	120 (4½)	60 (2¼)	60°	8.6 (11.2)	64 (77)
	1500 (60)	1.62 m (5′-4″)	890 (35)	1.97 m (6′-6″)	2.111 m (6′-11¼″)	6.13 m (20′-2″)	3.24 m (10′-8″)	1.87 m (6′-2″)	1.829 m (6′-0″)	3.03 m (9′-11½″)	3.1 m (10′-2½″)	120 (4½)	60 (2¼)	60°	10.0 (13.1)	70 (84)

All slope ratios are expressed as units of vertical displacement to units of horizontal displacement (V:H).

All dimensions are in millimeters (inches) unless otherwise shown.

Illinois Department of Transportation

APPROVED January 1, 1997
Ralph E. Anderson
ENGINEER OF BRIDGES AND STRUCTURES

APPROVED January 1, 1997
Gary Hamdorf
ENGINEER OF DESIGN AND ENVIRONMENT

ISSUED 1-1-97

REINFORCED CONCRETE END SECTIONS
FOR PIPE CULVERTS
1050 mm (42″) THRU 1500 mm (60″) DIA.
SKEWED WITH ROADWAY
(Sheet 2 of 5)

STANDARD 542206

WINGS FOR 1:1½ SLOPE

Skew Angle	Nominal Dia. For Pipe	DIMENSIONS FOR CONCRETE													Concrete 2 End Secs. m^3 (cu. yd.)	Wire Fabric 2 End Secs. m^2 (sq. yd.)
		A	B	C	D	E	F	G	H	J	K	M	N	α		
35°	1050 (42)	1.25 m (4′-1″)	660 (26)	1.49 m (4′-10½″)	1.58 m (5′-2¼″)	4.59 m (16′-0¾″)	2.71 m (8′-10″)	1.41 m (4′-7¼″)	1.295 m (4′-3″)	2.4 m (7′-10¾″)	2.49 m (8′-2″)	120 (4¾)	50 (2)	55°	6.5 (8.5)	47 (56)
	1200 (48)	1.35 m (4′-6″)	740 (29)	1.64 m (5′-5″)	1.798 m (5′-10¾″)	5.36 m (17′-9½″)	2.93 m (9′-9″)	1.53 m (5′-1″)	1.473 m (4′-10″)	2.64 m (8′-9″)	2.73 m (9′-0½″)	120 (4¾)	50 (2)	55°	7.8 (10.2)	55 (66)
	1350 (54)	1.56 m (4′-11″)	810 (32)	1.85 m (5′-11½″)	2.015 m (6′-7¼″)	6.1 m (19′-6¼″)	3.38 m (10′-7¾″)	1.76 m (5′-6½″)	1.651 m (5′-5″)	3.01 m (9′-7½″)	3.09 m (9′-10¾″)	120 (4¾)	50 (2)	55°	9.2 (12.0)	68 (81)
	1500 (60)	1.62 m (5′-4″)	890 (35)	1.97 m (6′-6″)	2.232 m (7′-4″)	6.46 m (21′-3″)	3.51 m (11′-6½″)	1.83 m (6′-0¼″)	1.829 m (6′-0″)	3.19 m (10′-5¾″)	3.27 m (10′-9¼″)	120 (4¾)	50 (2)	55°	10.8 (14.1)	74 (89)
40°	1050 (42)	1.25 m (4′-1″)	660 (26)	1.49 m (4′-10½″)	1.69 m (5′-6½″)	5.21 m (17′-1¼″)	2.95 m (9′-8″)	1.38 m (4′-6″)	1.295 m (4′-3″)	2.56 m (8′-4¾″)	2.65 m (8′-8½″)	130 (5)	50 (1¾)	50°	7.0 (9.1)	50 (60)
	1200 (48)	1.35 m (4′-6″)	740 (29)	1.64 m (5′-5″)	1.922 m (6′-3¾″)	5.72 m (18′-11¼″)	3.2 m (10′-7¾″)	1.49 m (4′-11½″)	1.473 m (4′-10″)	2.81 m (9′-3¾″)	2.91 m (9′-7½″)	130 (5)	50 (1¾)	50°	8.4 (11.0)	58 (70)
	1350 (54)	1.56 m (4′-11″)	810 (32)	1.85 m (5′-11½″)	2.155 m (7′-0¾″)	6.5 m (20′-9½″)	3.69 m (11′-7½″)	1.72 m (5′-5″)	1.651 m (5′-5″)	3.2 m (10′-2¾″)	3.3 m (10′-6¾″)	130 (5)	50 (1¾)	50°	9.9 (13.0)	72 (86)
	1500 (60)	1.62 m (5′-4″)	890 (35)	1.97 m (6′-6″)	2.387 m (7′-10″)	6.89 m (22′-7¾″)	3.84 m (12′-7½″)	1.79 m (6′-0″)	1.829 m (6′-0″)	3.4 m (11′-2″)	3.49 m (11′-5¾″)	130 (5)	50 (1¾)	50°	11.6 (15.2)	79 (95)
45°	1050 (42)	1.25 m (4′-1″)	660 (26)	1.49 m (4′-10½″)	1.831 m (6′-0″)	5.62 m (18′-5¼″)	3.26 m (10′-8″)	1.35 m (4′-5″)	1.295 m (4′-3″)	2.76 m (9′-0½″)	2.86 m (9′-4¾″)	140 (5¼)	40 (1½)	45°	7.6 (10.0)	54 (65)
	1200 (48)	1.35 m (4′-6″)	740 (29)	1.64 m (5′-5″)	2.083 m (6′-10″)	6.17 m (20′-5¼″)	3.53 m (11′-9″)	1.46 m (4′-10½″)	1.473 m (4′-10″)	3.03 m (10′-0½″)	3.14 m (10′-4¾″)	140 (5¼)	40 (1½)	45°	9.2 (12.0)	63 (75)
	1350 (54)	1.56 m (4′-11″)	810 (32)	1.85 m (5′-11½″)	2.334 m (7′-8″)	7.01 m (22′-5¼″)	4.08 m (12′-10¼″)	1.69 m (5′-3¾″)	1.651 m (5′-5″)	3.45 m (11′-0½″)	3.56 m (11′-4¾″)	140 (5¼)	40 (1½)	45°	10.9 (14.2)	78 (93)
	1500 (60)	1.62 m (5′-4″)	890 (35)	1.97 m (6′-6″)	2.586 m (8′-5¾″)	7.43 m (24′-5¼″)	4.24 m (13′-11¼″)	1.76 m (5′-9¼″)	1.829 m (6′-0″)	3.66 m (12′-0½″)	3.77 m (12′-4¾″)	140 (5¼)	40 (1½)	45°	12.8 (16.7)	86 (103)
50°	1050 (42)	1.25 m (4′-1″)	660 (26)	1.49 m (4′-10½″)	2.014 m (6′-7¼″)	6.15 m (20′-2″)	3.64 m (11′-11¼″)	1.33 m (4′-4¼″)	1.295 m (4′-3″)	3.01 m (9′-10½″)	3.14 m (10′-3½″)	140 (5½)	40 (1½)	40°	8.4 (11.0)	59 (71)
	1200 (48)	1.35 m (4′-6″)	740 (29)	1.64 m (5′-5″)	2.291 m (7′-6¼″)	6.75 m (22′-4½″)	3.95 m (13′-2″)	1.44 m (4′-9½″)	1.473 m (4′-10″)	3.31 m (10′-11¾″)	3.44 m (11′-4¾″)	140 (5½)	40 (1½)	40°	10.2 (13.3)	69 (82)
	1350 (54)	1.56 m (4′-11″)	810 (32)	1.85 m (5′-11½″)	2.568 m (8′-5″)	7.68 m (24′-7″)	4.56 m (14′-4½″)	1.66 m (5′-2¾″)	1.651 m (5′-5″)	3.78 m (12′-1″)	3.9 m (12′-6″)	140 (5½)	40 (1½)	40°	12.1 (15.8)	85 (102)
	1500 (60)	1.62 m (5′-4″)	890 (35)	1.97 m (6′-6″)	2.845 m (9′-4″)	8.15 m (26′-9¼″)	4.72 m (15′-7¼″)	1.73 m (5′-8″)	1.829 m (6′-0″)	4.02 m (13′-2¼″)	4.13 m (13′-7″)	140 (5½)	40 (1½)	40°	14.1 (18.5)	94 (112)
55°	1050 (42)	1.25 m (4′-1″)	660 (26)	1.49 m (4′-10½″)	2.257 m (7′-5″)	6.85 m (22′-5¾″)	4.14 m (13′-7″)	1.31 m (4′-3½″)	1.295 m (4′-3″)	3.36 m (11′-0¼″)	3.49 m (11′-5½″)	150 (5¾)	30 (1¼)	35°	9.4 (12.3)	66 (79)
	1200 (48)	1.35 m (4′-6″)	740 (29)	1.64 m (5′-5″)	2.568 m (8′-5″)	7.53 m (24′-11½″)	4.49 m (14′-11½″)	1.42 m (4′-8½″)	1.473 m (4′-10″)	3.7 m (12′-3″)	3.83 m (12′-8½″)	150 (5¾)	30 (1¼)	35°	11.4 (14.9)	77 (92)
	1350 (54)	1.56 m (4′-11″)	810 (32)	1.85 m (5′-11½″)	2.878 m (9′-5¼″)	8.57 m (27′-5″)	5.19 m (16′-4¼″)	1.64 m (5′-1¾″)	1.651 m (5′-5″)	4.22 m (13′-6″)	4.35 m (13′-11″)	150 (5¾)	30 (1¼)	35°	13.5 (17.7)	95 (113)
	1500 (60)	1.62 m (5′-4″)	890 (35)	1.97 m (6′-6″)	3.188 m (10′-5½″)	9.09 m (29′-10¾″)	5.39 m (17′-8¾″)	1.7 m (5′-7″)	1.829 m (6′-0″)	4.48 m (14′-8¾″)	4.61 m (15′-2″)	150 (5¾)	30 (1¼)	35°	15.9 (20.8)	104 (125)
60°	1050 (42)	1.25 m (4′-1″)	660 (26)	1.49 m (4′-10½″)	2.59 m (8′-6″)	7.82 m (25′-7¾″)	4.81 m (15′-9¼″)	1.29 m (4′-2¾″)	1.295 m (4′-3″)	3.84 m (12′-7″)	3.98 m (13′-0¾″)	160 (6¼)	30 (1)	30°	10.8 (14.1)	75 (89)
	1200 (48)	1.35 m (4′-6″)	740 (29)	1.64 m (5′-5″)	2.946 m (9′-8″)	8.59 m (28′-5¾″)	5.22 m (17′-4¾″)	1.4 m (4′-8″)	1.473 m (4′-10″)	4.22 m (14′-0″)	4.37 m (14′-5¾″)	160 (6¼)	30 (1)	30°	13.0 (17.0)	87 (104)
	1350 (54)	1.56 m (4′-11″)	810 (32)	1.85 m (5′-11½″)	3.302 m (10′-10″)	9.79 m (31′-3¾″)	6.03 m (19′-0″)	1.62 m (5′-1″)	1.651 m (5′-5″)	4.82 m (15′-5″)	4.97 m (15′-10¾″)	160 (6¼)	30 (1)	30°	15.5 (20.3)	108 (129)
	1500 (60)	1.62 m (5′-4″)	890 (35)	1.97 m (6′-6″)	3.658 m (12′-0″)	10.39 m (34′-1¾″)	6.26 m (20′-7¼″)	1.68 m (5′-6¼″)	1.829 m (6′-0″)	5.12 m (16′-10″)	5.27 m (17′-3¾″)	160 (6¼)	30 (1)	30°	18.2 (23.8)	119 (142)

All slope ratios are expressed as units of vertical displacement to units of horizontal displacement (V:H).

All dimensions are in millimeters (inches) unless otherwise shown.

Illinois Department of Transportation

APPROVED January 1, 1997
Ralph E. Anderson
ENGINEER OF BRIDGES AND STRUCTURES

APPROVED January 1, 1997
Gary Hamdorf
ENGINEER OF DESIGN AND ENVIRONMENT

ISSUED 1-1-97

REINFORCED CONCRETE END SECTIONS
FOR PIPE CULVERTS
1050 mm (42″) THRU 1500 mm (60″) DIA.
SKEWED WITH ROADWAY
(Sheet 3 of 5)

STANDARD 542206

WINGS FOR 1:2 SLOPE

Skew Angle	Nominal Dia. For Pipe	DIMENSIONS FOR CONCRETE													Concrete 2 End Secs. m^3 (cu. yd.)	Wire Fabric 2 End Secs. m^2 (sq. yd.)
		A	B	C	D	E	F	G	H	J	K	M	N	α		
5°	1050 (42)	1.66 m (5′-5″)	660 (26)	1.49 m (4′-10½″)	1.299 m (4′-3¼″)	4.92 m (16′-1″)	2.46 m (8′-0¼″)	2.26 m (7′-4¼″)	1.295 m (4′-3″)	2.45 m (8′-0¼″)	2.47 m (8′-0¾″)	90 (3½)	80 (3)	85°	6.1 (8.0)	51 (61)
	1200 (48)	1.8 m (6′-0″)	740 (29)	1.64 m (5′-5″)	1.478 m (4′-10¼″)	5.38 m (17′-10″)	2.67 m (8′-10½″)	2.44 m (8′-1¾″)	1.473 m (4′-10″)	2.68 m (8′-10¾″)	2.7 m (8′-11¼″)	90 (3½)	80 (3)	85°	7.3 (9.6)	59 (71)
	1350 (54)	2.08 m (6′-7″)	810 (32)	1.85 m (5′-11½″)	1.657 m (5′-5¼″)	6.12 m (19′-7″)	3.08 m (9′-9″)	2.82 m (8′-11¼″)	1.651 m (5′-5″)	3.05 m (9′-9¼″)	3.07 m (9′-9¾″)	90 (3½)	80 (3)	85°	8.6 (11.3)	74 (88)
	1500 (60)	2.16 m (7′-2″)	890 (35)	1.97 m (6′-6″)	1.835 m (6′-0¼″)	6.46 m (21′-4¼″)	3.2 m (10′-7¼″)	2.93 m (9′-8¾″)	1.829 m (6′-0″)	3.22 m (10′-8″)	3.24 m (10′-8¼″)	90 (3½)	80 (3)	85°	10.1 (13.2)	80 (96)
10°	1050 (42)	1.66 m (5′-5″)	660 (26)	1.49 m (4′-10½″)	1.314 m (4′-3¾″)	4.97 m (16′-3″)	2.59 m (8′-5″)	2.17 m (7′-0¾″)	1.295 m (4′-3″)	2.47 m (8′-1″)	2.5 m (8′-2″)	100 (3¾)	80 (3)	80°	6.3 (8.3)	52 (62)
	1200 (48)	1.8 m (6′-0″)	740 (29)	1.64 m (5′-5″)	1.495 m (4′-11″)	5.43 m (18′-0½″)	2.8 m (9′-4″)	2.35 m (7′-10″)	1.473 m (4′-10″)	2.71 m (8′-11¾″)	2.73 m (9′-0¾″)	100 (3¾)	80 (3)	80°	7.6 (9.9)	60 (72)
	1350 (54)	2.08 m (6′-7″)	810 (32)	1.85 m (5′-11½″)	1.676 m (5′-6″)	6.19 m (19′-9¾″)	3.24 m (10′-3″)	2.72 m (8′-7¼″)	1.651 m (5′-5″)	3.08 m (9′-10½″)	3.11 m (9′-11¼″)	100 (3¾)	80 (3)	80°	8.9 (11.7)	75 (90)
	1500 (60)	2.16 m (7′-2″)	890 (35)	1.97 m (6′-6″)	1.857 m (6′-1″)	6.53 m (21′-7″)	3.36 m (11′-1¾″)	2.82 m (9′-4¼″)	1.829 m (6′-0″)	3.25 m (10′-9″)	3.28 m (10′-10″)	100 (3¾)	80 (3)	80°	10.5 (13.7)	82 (98)
15°	1050 (42)	1.66 m (5′-5″)	660 (26)	1.49 m (4′-10½″)	1.34 m (4′-4¾″)	5.06 m (16′-6½″)	2.73 m (8′-10¾″)	2.1 m (6′-10″)	1.295 m (4′-3″)	2.51 m (8′-2½″)	2.55 m (8′-4″)	100 (4)	70 (2¾)	75°	6.6 (8.6)	53 (64)
	1200 (48)	1.8 m (6′-0″)	740 (29)	1.64 m (5′-5″)	1.524 m (5′-0″)	5.54 m (18′-4½″)	2.96 m (9′-10¼″)	2.27 m (7′-6¾″)	1.473 m (4′-10″)	2.75 m (9′-1½″)	2.79 m (9′-3″)	100 (4)	70 (2¾)	75°	8.0 (10.4)	62 (74)
	1350 (54)	2.08 m (6′-7″)	810 (32)	1.85 m (5′-11½″)	1.709 m (5′-7¼″)	6.3 m (20′-2″)	3.42 m (10′-9¾″)	2.63 m (8′-3½″)	1.651 m (5′-5″)	3.13 m (10′-0¼″)	3.17 m (10′-1¾″)	100 (4)	70 (2¾)	75°	9.4 (12.3)	77 (92)
	1500 (60)	2.16 m (7′-2″)	890 (35)	1.97 m (6′-6″)	1.893 m (6′-2½″)	6.65 m (21′-11¾″)	3.55 m (11′-9¼″)	2.73 m (9′-0½″)	1.829 m (6′-0″)	3.31 m (10′-11¼″)	3.34 m (11′-0½″)	100 (4)	70 (2¾)	75°	10.9 (14.3)	84 (100)
20°	1050 (42)	1.66 m (5′-5″)	660 (26)	1.49 m (4′-10½″)	1.378 m (4′-6¼″)	5.19 m (16′-11¾″)	2.9 m (9′-5¼″)	2.03 m (6′-7¼″)	1.295 m (4′-3″)	2.57 m (8′-5″)	2.62 m (8′-6¾″)	110 (4¼)	70 (2½)	70°	6.9 (9.0)	55 (66)
	1200 (48)	1.8 m (6′-0″)	740 (29)	1.64 m (5′-5″)	1.567 m (5′-1¾″)	5.68 m (18′-10″)	3.14 m (10′-5½″)	2.2 m (7′-4″)	1.473 m (4′-10″)	2.81 m (9′-4″)	2.86 m (9′-6″)	110 (4¼)	70 (2½)	70°	8.3 (10.9)	64 (76)
	1350 (54)	2.08 m (6′-7″)	810 (32)	1.85 m (5′-11½″)	1.756 m (5′-9¼″)	6.47 m (20′-8½″)	3.63 m (11′-5¾″)	2.54 m (8′-0½″)	1.651 m (5′-5″)	3.21 m (10′-3¼″)	3.26 m (10′-5¼″)	110 (4¼)	70 (2½)	70°	9.9 (12.9)	79 (94)
	1500 (60)	2.16 m (7′-2″)	890 (35)	1.97 m (6′-6″)	1.946 m (6′-4½″)	6.83 m (22′-6¾″)	3.77 m (12′-6″)	2.64 m (8′-9″)	1.829 m (6′-0″)	3.39 m (11′-2½″)	3.44 m (11′-4¼″)	110 (4¼)	70 (2½)	70°	11.5 (15.1)	86 (103)
25°	1050 (42)	1.66 m (5′-5″)	660 (26)	1.49 m (4′-10½″)	1.428 m (4′-8¼″)	5.37 m (17′-6¾″)	3.09 m (10′-1″)	1.64 m (6′-5″)	1.295 m (4′-3″)	2.65 m (8′-8¼″)	2.72 m (8′-10½″)	110 (4½)	60 (2¼)	65°	7.3 (9.5)	55 (65)
	1200 (48)	1.8 m (6′-0″)	740 (29)	1.64 m (5′-5″)	1.625 m (5′-4″)	5.88 m (19′-6″)	3.35 m (11′-2″)	2.14 m (7′-1¼″)	1.473 m (4′-10″)	2.91 m (9′-7¾″)	2.97 m (9′-10¼″)	110 (4½)	60 (2¼)	65°	8.8 (11.5)	66 (79)
	1350 (54)	2.08 m (6′-7″)	810 (32)	1.85 m (5′-11½″)	1.821 m (5′-11¾″)	6.69 m (21′-5″)	3.87 m (12′-3″)	2.47 m (7′-9¾″)	1.651 m (5′-5″)	3.31 m (10′-7¼″)	3.37 m (10′-9¾″)	110 (4½)	60 (2¼)	65°	10.4 (13.6)	82 (98)
	1500 (60)	2.16 m (7′-2″)	890 (35)	1.97 m (6′-6″)	2.018 m (6′-7½″)	7.06 m (23′-4¼″)	4.02 m (13′-4″)	2.56 m (8′-6″)	1.829 m (6′-0″)	3.5 m (11′-7″)	3.56 m (11′-9¼″)	110 (4½)	60 (2¼)	65°	12.2 (15.9)	90 (107)
30°	1050 (42)	1.66 m (5′-5″)	660 (26)	1.49 m (4′-10½″)	1.495 m (4′-11″)	5.61 m (18′-4″)	3.32 m (10′-10″)	1.92 m (6′-3″)	1.295 m (4′-3″)	2.77 m (9′-0½″)	2.84 m (9′-3½″)	120 (4½)	60 (2¼)	60°	7.7 (10.1)	59 (71)
	1200 (48)	1.8 m (6′-0″)	740 (29)	1.64 m (5′-5″)	1.7 m (5′-7″)	6.13 m (20′-4¼″)	3.6 m (12′-0″)	2.08 m (6′-11¼″)	1.473 m (4′-10″)	3.03 m (10′-0¾″)	3.1 m (10′-3½″)	120 (4½)	60 (2¼)	60°	9.3 (12.2)	69 (82)
	1350 (54)	2.08 m (6′-7″)	810 (32)	1.85 m (5′-11½″)	1.906 m (6′-3″)	6.99 m (22′-4½″)	4.16 m (13′-2″)	2.41 m (7′-7¼″)	1.651 m (5′-5″)	3.46 m (11′-0¾″)	3.53 m (11′-3¾″)	120 (4½)	60 (2¼)	60°	11.0 (14.4)	86 (102)
	1500 (60)	2.16 m (7′-2″)	890 (35)	1.97 m (6′-6″)	2.111 m (6′-11¼″)	7.38 m (24′-4¾″)	4.32 m (14′-4″)	2.45 m (8′-3¼″)	1.829 m (6′-0″)	3.65 m (12′-1″)	3.73 m (12′-3¾″)	120 (4½)	60 (2¼)	60°	12.9 (16.9)	93 (112)

All slope ratios are expressed as units of vertical displacement to units of horizontal displacement (V:H).

All dimensions are in millimeters (inches) unless otherwise shown.

Illinois Department of Transportation

APPROVED January 1, 1997
Ralph E. Anderson
ENGINEER OF BRIDGES AND STRUCTURES

APPROVED January 1, 1997
Gary Hamdorf
ENGINEER OF DESIGN AND ENVIRONMENT

ISSUED 1-1-97

REINFORCED CONCRETE END SECTIONS
FOR PIPE CULVERTS
1050 mm (42″) THRU 1500 mm (60″) DIA.
SKEWED WITH ROADWAY
(Sheet 4 of 5)

STANDARD 542206

WINGS FOR 1:2 SLOPE

Skew Angle	Nominal Dia. For Pipe	DIMENSIONS FOR CONCRETE													Concrete 2 End Secs. m^3 (cu. yd.)	Wire Fabric 2 End Secs. m^2 (sq. yd.)
		A	B	C	D	E	F	G	H	J	K	M	N	α		
35°	1050 (42)	1.66 m (5′-5″)	660 (26)	1.49 m (4′-10½″)	1.58 m (5′-2¼″)	5.91 m (19′-3¾″)	3.6 m (11′-8¾″)	1.87 m (6′-1¼″)	1.295 m (4′-3″)	2.91 m (9′-6¼″)	3. m (9′-9½″)	120 (4¾)	50 (2)	55°	8.3 (10.8)	63 (75)
	1200 (48)	1.80 m (6′-0″)	740 (29)	1.64 m (5′-5″)	1.798 m (5′-10¾″)	6.47 m (21′-5½″)	3.9 m (13′-0″)	2.03 m (6′-9¼″)	1.473 m (4′-10″)	3.19 m (10′-7″)	3.28 m (10′-10½″)	120 (4¾)	50 (2)	55°	9.9 (13.0)	73 (87)
	1350 (54)	2.08 m (6′-7″)	810 (32)	1.85 m (5′-11½″)	2.015 m (6′-7¼″)	7.37 m (23′-7″)	4.51 m (14′-3″)	2.35 m (7′-5″)	1.651 m (5′-5″)	3.64 m (11′-7¾″)	3.73 m (11′-11¼″)	120 (4¾)	50 (2)	55°	11.8 (15.4)	90 (108)
	1500 (60)	2.16 m (7′-2″)	890 (35)	1.97 m (6′-6″)	2.232 m (7′-4″)	7.78 m (25′-8¾″)	4.68 m (15′-6¼″)	2.44 m (8′-1″)	1.829 m (6′-0″)	3.85 m (12′-8¾″)	3.93 m (13′-0″)	120 (4¾)	50 (2)	55°	13.8 (18.1)	99 (118)
40°	1050 (42)	1.66 m (5′-5″)	660 (26)	1.49 m (4′-10½″)	1.69 m (5′-6½″)	6.29 m (20′-7″)	3.93 m (12′-9¾″)	1.84 m (5′-11¾″)	1.295 m (4′-3″)	3.1 m (10′-1½″)	3.19 m (10′-5½″)	130 (5)	50 (1¾)	50°	8.9 (11.6)	67 (80)
	1200 (48)	1.80 m (6′-0″)	740 (29)	1.64 m (5′-5″)	1.922 m (6′-3¾″)	6.89 m (22′-10¼″)	4.26 m (14′-2¼″)	1.99 m (6′-7½″)	1.473 m (4′-10″)	3.4 m (11′-3¼″)	3.49 m (11′-7″)	130 (5)	50 (1¾)	50°	10.7 (14.0)	77 (93)
	1350 (54)	2.08 m (6′-7″)	810 (32)	1.85 m (5′-11½″)	2.155 m (7′-0¾″)	7.86 m (25′-1¾″)	4.93 m (15′-7″)	2.3 m (7′-3¼″)	1.651 m (5′-5″)	3.88 m (12′-5″)	3.98 m (12′-8¾″)	130 (5)	50 (1¾)	50°	12.8 (16.7)	96 (115)
	1500 (60)	2.16 m (7′-2″)	890 (35)	1.97 m (6′-6″)	2.387 m (7′-10″)	8.3 m (27′-5¼″)	5.11 m (16′-11½″)	2.39 m (7′-11″)	1.829 m (6′-0″)	4.1 m (13′-6¾″)	4.2 m (13′-10½″)	130 (5)	50 (1¾)	50°	14.9 (19.5)	105 (126)
45°	1050 (42)	1.66 m (5′-5″)	660 (26)	1.49 m (4′-10½″)	1.831 m (6′-0″)	6.79 m (22′-2½″)	4.34 m (14′-1¾″)	1.8 m (5′-10¼″)	1.295 m (4′-3″)	3.34 m (10′-11″)	3.45 m (11′-3½″)	140 (5¼)	40 (1½)	45°	9.6 (12.6)	72 (86)
	1200 (48)	1.80 m (6′-0″)	740 (29)	1.64 m (5′-5″)	2.083 m (6′-10″)	7.44 m (24′-8¼″)	4.7 m (15′-8¼″)	1.95 m (6′-6″)	1.473 m (4′-10″)	3.67 m (12′-2″)	3.77 m (12′-6¼″)	140 (5¼)	40 (1½)	45°	12.0 (15.2)	83 (100)
	1350 (54)	2.08 m (6′-7″)	810 (32)	1.85 m (5′-11½″)	2.334 m (7′-8″)	8.48 m (27′-1¾″)	5.44 m (17′-2½″)	2.25 m (7′-1½″)	1.651 m (5′-5″)	4.19 m (13′-4¾″)	4.29 m (13′-9″)	140 (5¼)	41 (1½)	45°	13.9 (18.2)	104 (124)
	1500 (60)	2.16 m (7′-2″)	890 (35)	1.97 m (6′-6″)	2.586 m (8′-5¾″)	8.96 m (29′-7½″)	5.65 m (18′-8¾″)	2.34 m (7′-9″)	1.829 m (6′-0″)	4.43 m (14′-7½″)	4.53 m (15′-0″)	140 (5¼)	40 (1½)	45°	16.3 (21.3)	114 (136)
50°	1050 (42)	1.66 m (5′-5″)	660 (26)	1.49 m (4′-10½″)	2.014 m (6′-7¼″)	7.44 m (24′-3¾″)	4.86 m (15′-10″)	1.77 m (5′-9¼″)	1.295 m (4′-3″)	3.66 m (11′-11½″)	3.78 m (12′-4¼″)	150 (5½)	40 (1½)	40°	10.6 (13.9)	78 (94)
	1200 (48)	1.80 m (6′-0″)	740 (29)	1.64 m (5′-5″)	2.291 m (7′-6¼″)	8.15 m (27′-0½″)	5.27 m (17′-6½″)	1.92 m (6′-4½″)	1.473 m (4′-10″)	4.02 m (13′-3¾″)	4.13 m (13′-8¾″)	150 (5½)	40 (1½)	40°	12.8 (16.8)	91 (109)
	1350 (54)	2.08 m (6′-7″)	810 (32)	1.85 m (5′-11½″)	2.568 m (8′-5″)	9.3 m (29′-9¼″)	6.09 m (19′-3″)	2.21 m (7′-0″)	1.651 m (5′-5″)	4.59 m (14′-8¼″)	4.71 m (15′-1″)	150 (5½)	40 (1½)	40°	15.3 (20.0)	113 (135)
	1500 (60)	2.16 m (7′-2″)	890 (35)	1.97 m (6′-6″)	2.845 m (9′-4″)	9.82 m (32′-5¾″)	6.32 m (20′-11½″)	2.3 m (7′-7½″)	1.829 m (6′-0″)	4.86 m (16′-0½″)	4.97 m (16′-5¼″)	150 (5½)	40 (1½)	40°	18.0 (23.5)	124 (148)
55°	1050 (42)	1.66 m (5′-5″)	660 (26)	1.49 m (4′-10½″)	2.257 m (7′-5″)	8.3 m (27′-1½″)	5.52 m (18′-0¼″)	1.74 m (5′-8¼″)	1.295 m (4′-3″)	4.08 m (13′-4¼″)	4.22 m (13′-9¼″)	150 (5¾)	30 (1¼)	35°	11.9 (15.5)	87 (104)
	1200 (48)	1.80 m (6′-0″)	740 (29)	1.64 m (5′-5″)	2.568 m (8′-5″)	9.1 m (30′-2¼″)	5.99 m (19′-11½″)	1.89 m (6′-3½″)	1.473 m (4′-10″)	4.48 m (14′-10½″)	4.62 m (15′-3¾″)	150 (5¾)	30 (1¼)	35°	14.4 (18.8)	101 (121)
	1350 (54)	2.08 m (6′-7″)	810 (32)	1.85 m (5′-11½″)	2.878 m (9′-5¼″)	10.39 m (33′-2¾″)	6.92 m (21′-10¾″)	2.18 m (6′-10¾″)	1.651 m (5′-5″)	5.13 m (16′-4¾″)	5.26 m (16′-10″)	150 (5¾)	30 (1¼)	35°	17.1 (22.4)	125 (150)
	1500 (60)	2.16 m (7′-2″)	890 (35)	1.97 m (6′-6″)	3.188 m (10′-5½″)	10.97 m (36′-3½″)	7.18 m (23′-10″)	2.27 m (7′-6¼″)	1.829 m (6′-0″)	5.42 m (17′-11¼″)	5.55 m (18′-4¼″)	150 (5¾)	30 (1¼)	35°	20.2 (26.4)	138 (165)
60°	1050 (42)	1.66 m (5′-5″)	660 (26)	1.49 m (4′-10½″)	2.59 m (8′-6″)	9.48 m (30′-11¾″)	6.42 m (20′-11¼″)	1.72 m (5′-7¼″)	1.295 m (4′-3″)	4.67 m (15′-3″)	4.81 m (15′-8¾″)	160 (6¼)	30 (1)	30°	13.5 (17.7)	98 (118)
	1200 (48)	1.80 m (6′-0″)	740 (29)	1.64 m (5′-5″)	2.946 m (9′-8″)	10.39 m (34′-5¾″)	6.96 m (23′-2¼″)	1.87 m (6′-2½″)	1.473 m (4′-10″)	5.12 m (17′-0″)	5.27 m (17′-5¾″)	160 (6¼)	30 (1)	30°	16.4 (21.5)	115 (137)
	1350 (54)	2.08 m (6′-7″)	810 (32)	1.85 m (5′-11½″)	3.302 m (10′-10″)	11.87 m (37′-11¾″)	8.04 m (25′-5¼″)	2.16 m (6′-9¾″)	1.651 m (5′-5″)	5.86 m (18′-9″)	6.01 m (19′-2¾″)	160 (6¼)	30 (1)	30°	19.6 (25.7)	142 (170)
	1500 (60)	2.16 m (7′-2″)	890 (35)	1.97 m (6′-6″)	3.658 m (12′-0″)	12.55 m (41′-5¾″)	8.35 m (27′-8¼″)	2.24 m (7′-5″)	1.829 m (6′-0″)	6.2 m (20′-6″)	6.35 m (20′-11¾″)	160 (6¼)	30 (1)	30°	23.1 (30.2)	157 (187)

All slope ratios are expressed as units of vertical displacement to units of horizontal displacement (V:H).

All dimensions are in millimeters (inches) unless otherwise shown.

Illinois Department of Transportation

APPROVED January 1, 1997
Ralph E. Anderson
ENGINEER OF BRIDGES AND STRUCTURES

APPROVED January 1, 1997
Gary Hamdorf
ENGINEER OF DESIGN AND ENVIRONMENT

ISSUED 1-1-97

REINFORCED CONCRETE END SECTIONS
FOR PIPE CULVERTS
1050 mm (42″) THRU 1500 mm (60″) DIA.
SKEWED WITH ROADWAY
(Sheet 5 of 5)

STANDARD 542206