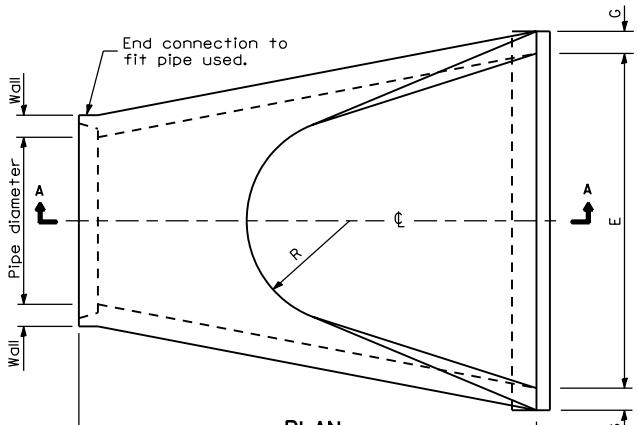

PLAN

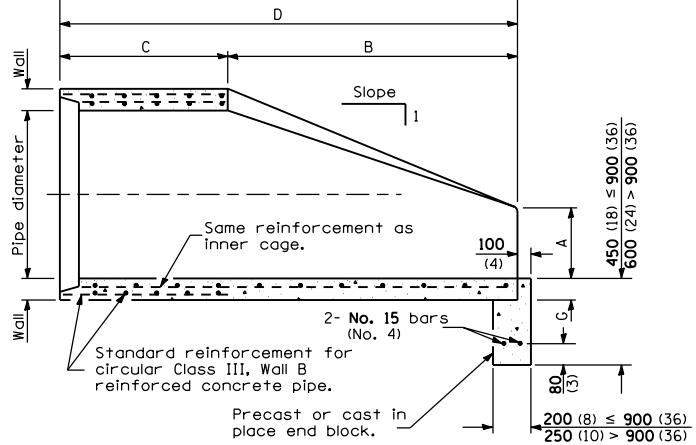

SECTION A-A

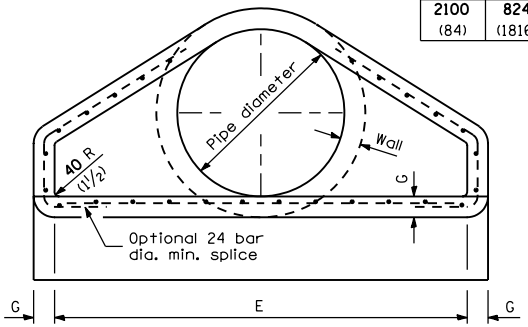

END VIEW

PIPE DIA.	APPROX. QTY. kg (lbs)	WALL	A	B	C	D	E	G	R	APPROX. SLOPE
300 (12)	240 (530)	51 (2)	102 (4)	610 (24)	1.241 m (4′-0 7/8″)	1.851 m (6′-0 7/8″)	610 (24)	51 (2)	229 (9)	1:2.4
375 (15)	335 (740)	57 (2 1/4)	152 (6)	686 (27)	1.168 m (3′-10″)	1.854 m (6′-1″)	762 (30)	57 (2 1/4)	280 (11)	1:2.4
450 (18)	450 (990)	64 (2 1/2)	229 (9)	686 (27)	1.168 m (3′-10″)	1.854 m (6′-1″)	914 (36)	64 (2 1/2)	305 (12)	1:2.4
525 (21)	580 (1280)	70 (2 3/4)	229 (9)	889 (35)	965 (38)	1.854 m (6′-1″)	1.067 m (3′-6″)	70 (2 3/4)	330 (13)	1:2.4
600 (24)	690 (1520)	76 (3)	241 (9 1/2)	1.105 m (3′-7 1/2″)	762 (30)	1.867 m (6′-1 1/2″)	1.219 m (4′-0″)	76 (3)	356 (14)	1:2.5
675 (27)	875 (1930)	83 (3 1/4)	267 (10 1/2)	1.219 m (4′-0″)	648 (25 1/2)	1.867 m (6′-1 1/2″)	1.372 m (4′-6″)	83 (3 1/4)	368 (14 1/2)	1:2.4
750 (30)	995 (2190)	89 (3 1/2)	305 (12)	1.375 m (4′-6″)	502 (19 3/4)	1.874 m (6′-1 3/4″)	1.524 m (5′-0″)	89 (3 1/2)	381 (15)	1:2.5
825 (33)	1450 (3200)	95 (3 3/4)	343 (13 1/2)	1.486 m (4′-10 1/2″)	997 (39 1/4)	2.483 m (8′-1 3/4″)	1.676 m (5′-6″)	95 (3 3/4)	445 (17 1/2)	1:2.5
900 (36)	1860 (4100)	102 (4)	381 (15)	1.6 m (5′-3″)	883 (34 3/4)	2.483 m (8′-1 3/4″)	1.829 m (6′-0″)	102 (4)	508 (20)	1:2.5
1050 (42)	2440 (5380)	114 (4 1/2)	533 (21)	1.6 m (5′-3″)	889 (35)	2.489 m (8′-2″)	1.981 m (6′-6″)	114 (4 1/2)	559 (22)	1:2.5
1200 (48)	2970 (6550)	127 (5)	610 (24)	1.829 m (6′-0″)	660 (26)	2.489 m (8′-2″)	2.134 m (7′-0″)	127 (5)	559 (22)	1:2.5
1350 (54)	3740 (8240)	140 (5 1/2)	686 (27)	1.651 m (5′-5″)	889 (35)	2.54 m (8′-4″)	2.286 m (7′-6″)	140 (5 1/2)	610 (24)	1:2.0
1500 (60)	3960 (8730)	152 (6)	889 (35)	1.524 m (5′-0″)	991 (39)	2.515 m (8′-3″)	2.438 m (8′-0″)	127 (5)	*	1:1.9
1650 (66)	4860 (10710)	165 (6 1/2)	762 (30)	1.829 m (6′-0″)	686 (27)	2.515 m (8′-3″)	2.591 m (8′-6″)	140 (5 1/2)	*	1:1.7
1800 (72)	5680 (12520)	178 (7)	914 (36)	1.981 m (6′-6″)	533 (21)	2.514 m (8′-3″)	2.743 m (9′-0″)	152 (6)	*	1:1.8
1950 (78)	6700 (14770)	191 (7 1/2)	914 (36)	2.286 m (7′-6″)	533 (21)	2.819 m (9′-3″)	2.896 m (9′-6″)	165 (6 1/2)	*	1:1.8
2100 (84)	8240 (18160)	203 (8)	914 (36)	2.299 m (7′-6 1/2″)	533 (21)	2.832 m (9′-3 1/2″)	3.048 m (10′-0″)	165 (6 1/2)	*	1:1.6

* Radius as furnished by manufacturer

GENERAL NOTES

All slope ratios are expressed as units of vertical displacement to units of horizontal displacement (V:H).

All dimensions are in millimeters (inches) unless otherwise shown.

Illinois Department of Transportation

APPROVED January 1, 1997
Ralph E. Anderson
ENGINEER OF BRIDGES AND STRUCTURES

APPROVED January 1, 1997
Gary Hamdal
ENGINEER OF DESIGN AND ENVIRONMENT

ISSUED 1-1-97

DATE	REVISIONS
1-1-97	Renum. Standard 2449-1.
	Deleted DN Symbol.
11-1-94	Revised metric values
	and slopes.

PRECAST REINFORCED CONCRETE FLARED END SECTION

STANDARD 542301