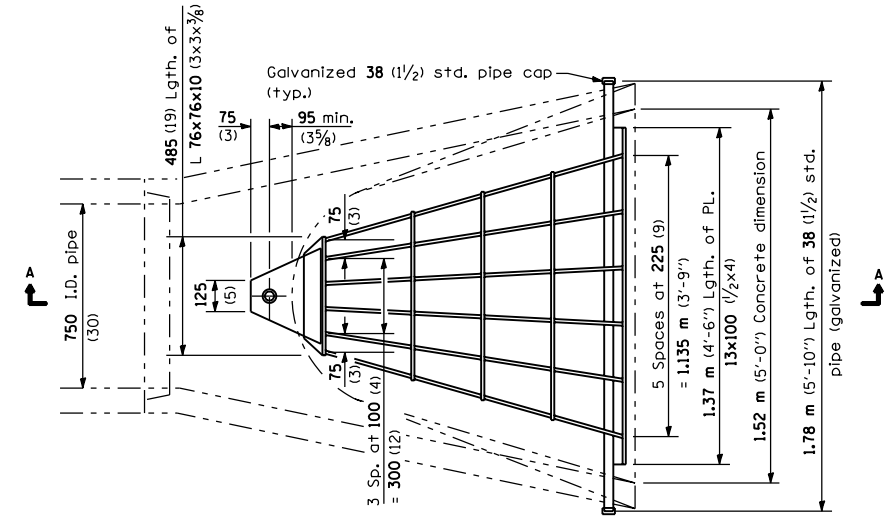

PLAN

Quantity of steel = **95 kg** (210 lbs.)

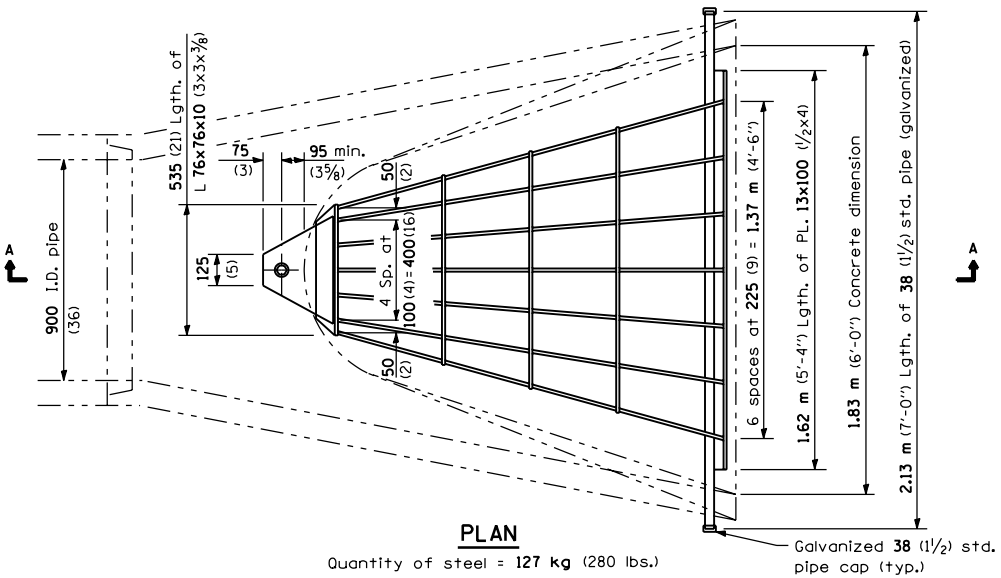

PLAN

Quantity of steel = **127 kg** (280 lbs.)

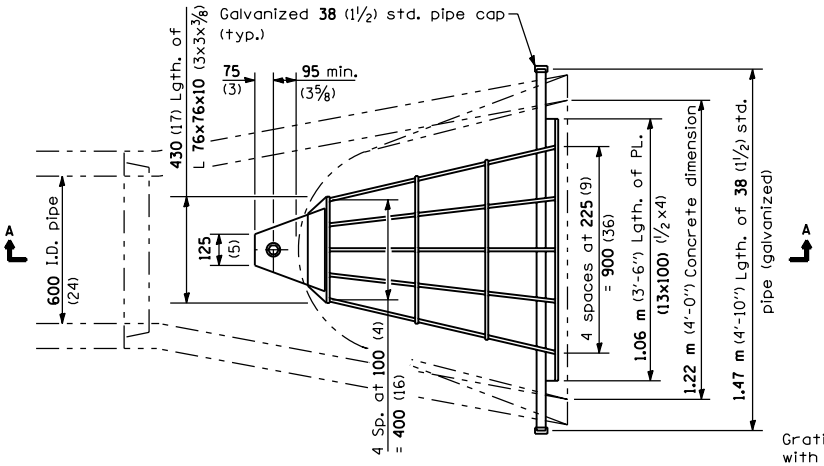

PLAN

Quantity of steel = **68 kg** (150 lbs.)

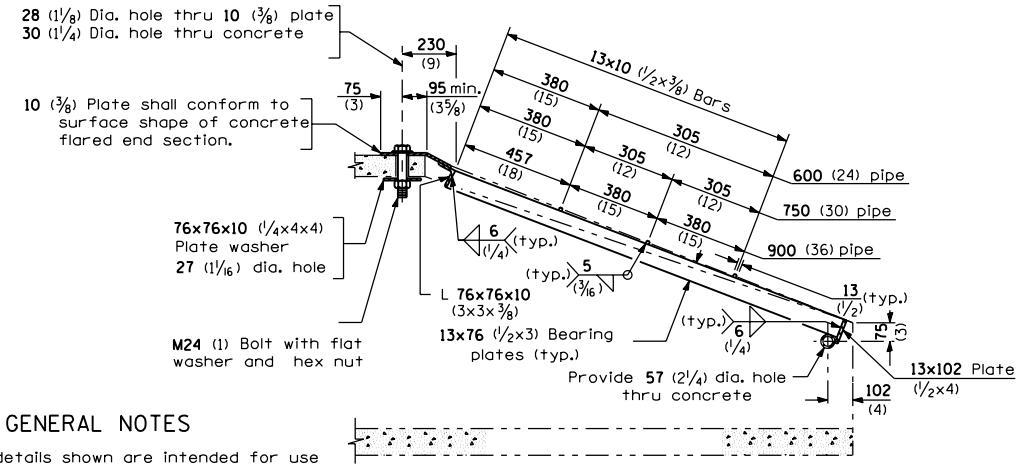

SECTION A-A

All dimensions are in millimeters (inches) unless otherwise shown.

GENERAL NOTES

Grating details shown are intended for use with particular sizes of precast reinforced concrete flared end sections as shown on standards 542301 and 542306.

Approximate quantity of steel shown includes total quantity of grating, bolts, nuts, washers and steel pipe.

Holes in the precast concrete flared end sections shall be cored to the diameters noted. If cone-out on the other end of the hole occurs, the hole shall be filled with grout to correct the diameter of the hole.

DATE	REVISIONS
1-1-97	Renum. Standard 2364-3
	and Standard 2379-2.
6-15-94	Moved G.N. to Specs.
	Added Metric.

Illinois Department of Transportation

PASSED January 1, 1997
ENGINEER OF POLICY AND PROCEDURES

APPROVED January 1, 1997
ENGINEER OF DESIGN AND ENVIRONMENT

ISSUED 1-1-97

GRATING FOR CONCRETE FLARED END SECTION (FOR 600 mm (24") THRU 1350 mm (54") PIPE)

(Sheet 1 of 2)

STANDARD 542311

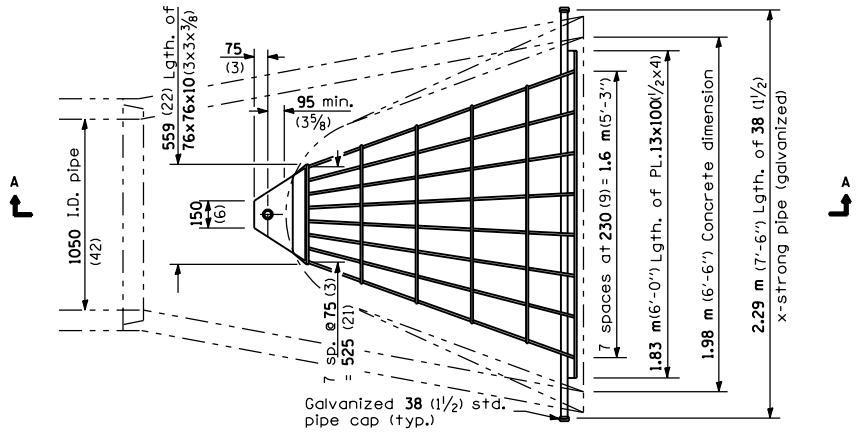

PLAN

Quantity of steel = **145 kg** (320 lbs.)

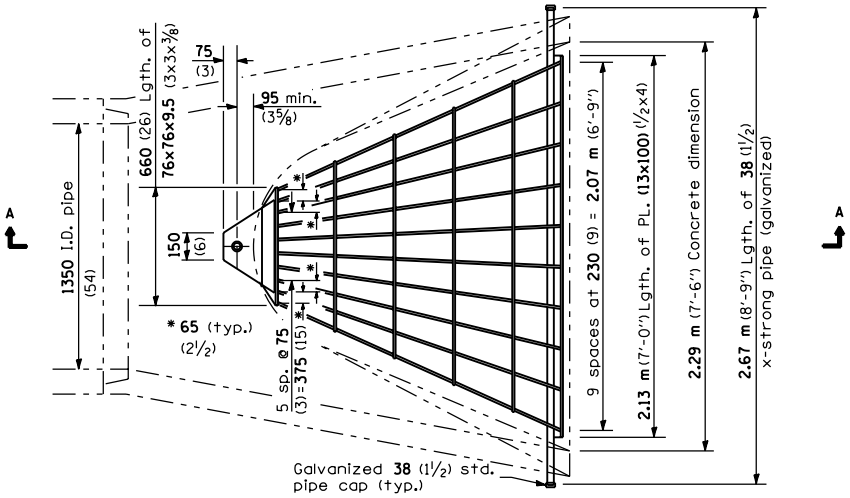

PLAN

Quantity of steel = **193 kg** (425 lbs.)

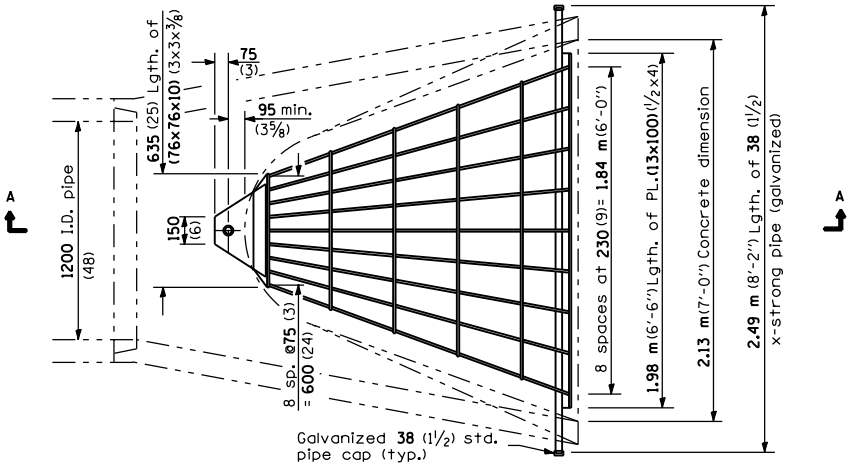

PLAN

Quantity of steel = **181 kg** (400 lbs.)

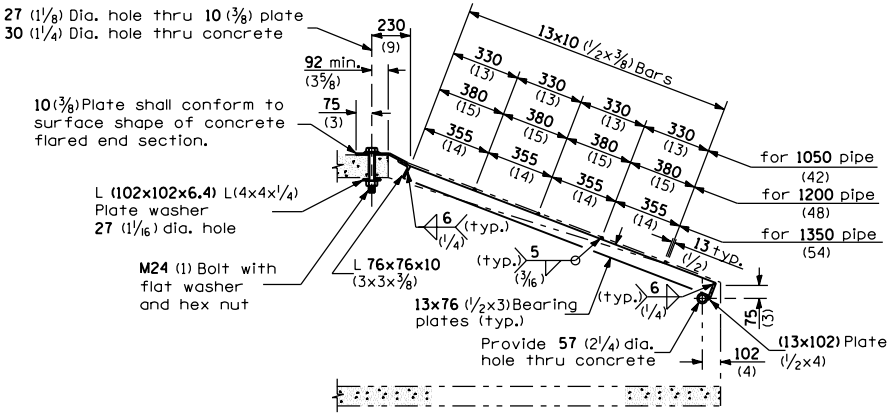

SECTION A-A

All dimensions are in millimeters (inches) unless otherwise shown.

Illinois Department of Transportation

PASSED January 1, 1997
ENGINEER OF POLICY AND PROCEDURES

APPROVED January 1, 1997
ENGINEER OF DESIGN AND ENVIRONMENT

ISSUED 1-1-97

GRATING FOR CONCRETE FLARED END SECTION (FOR 600 mm (24") THRU 1350 mm (54") PIPE)
(Sheet 2 of 2)

STANDARD 542311