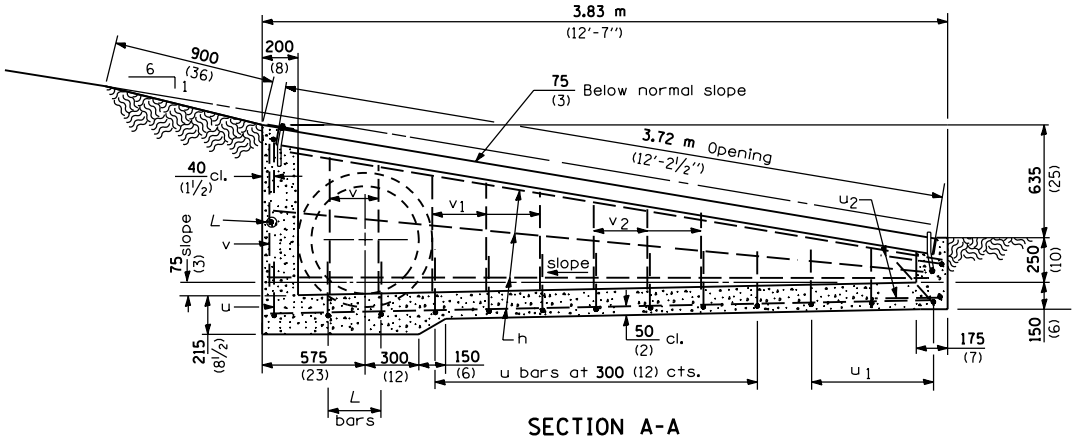

SECTION A-A

Material required for one inlet box

Bar	Qty.	Size	Length
h	8	No. 15 (No. 4)	3.66 m (12'-0")
h_1	2	No. 15 (No. 4)	2.75 m (9'-0")
L	5	No. 15 (No. 4)	1.50 m (5'-0")
u	9	No. 15 (No. 4)	1.95 m (6'-5")
u_1	3	No. 15 (No. 4)	1.80 m (5'-11")
u_2	2	No. 15 (No. 4)	1.75 m (5'-10")
v	6	No. 15 (No. 4)	760 (30)
v_1	6	No. 15 (No. 4)	610 (24)
v_2	6	No. 15 (No. 4)	460 (18)
Concrete Cast-in-place or Precast		m^3 (cu. yds.)	1.5 (2.0)
Reinforcement Bars		kg (lbs.)	125 (175)
Galv. Steel Pipe		89 O.D. (3½)	3.71 m (12'-2¼")

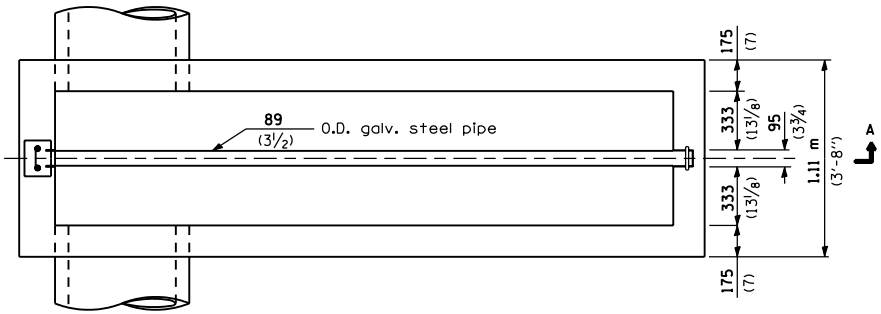

PLAN

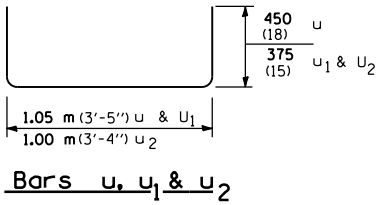

Bars u, u_1 & u_2

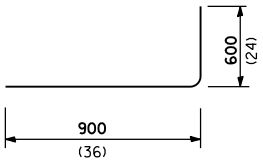

Bar L

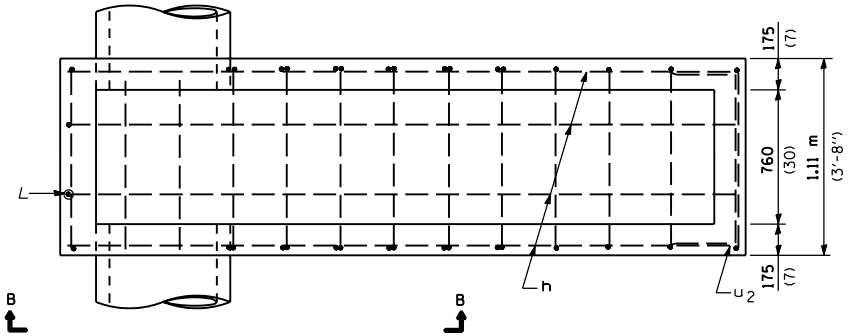

PLAN OF REINFORCEMENT

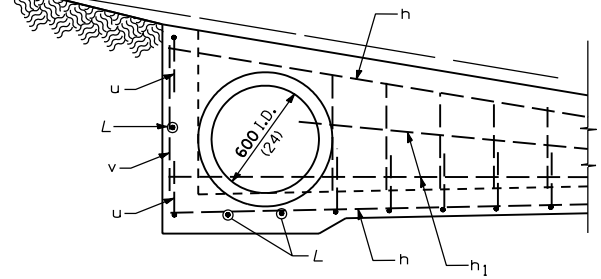

SECTION B-B

GENERAL NOTES

All slope ratios are expressed as units of vertical displacement to units of horizontal displacement (V:H).

All dimensions are in millimeters (inches) unless otherwise shown.

Illinois Department of Transportation

PASSED January 1, 1997
ENGINEER OF POLICY AND PROCEDURES

APPROVED January 1, 1997
ENGINEER OF DESIGN AND ENVIRONMENT

ISSUED 1-1-97

DATE	REVISIONS
1-1-97	Renum. Standard 2243-10.
6-15-94	Moved G.N. to Specs.
	Revised title. Added
	Metric and slope note.

INLET BOX TYPE 600 (24) E

(Sheet 1 of 2)

STANDARD 542521

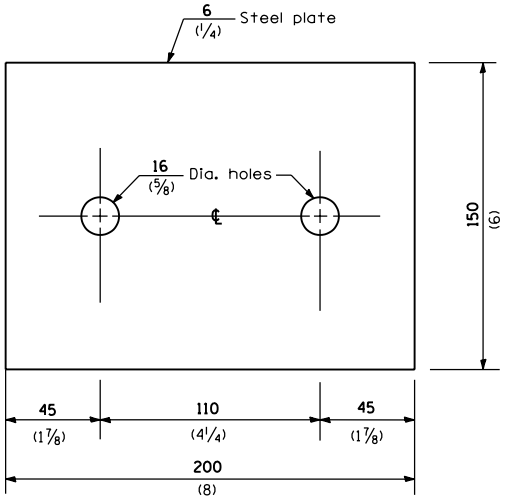

TOP ANCHOR PLATE

(1 - required)

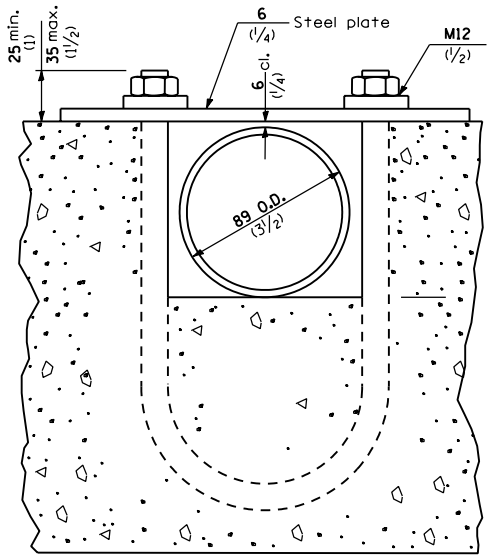

SECTION D-D

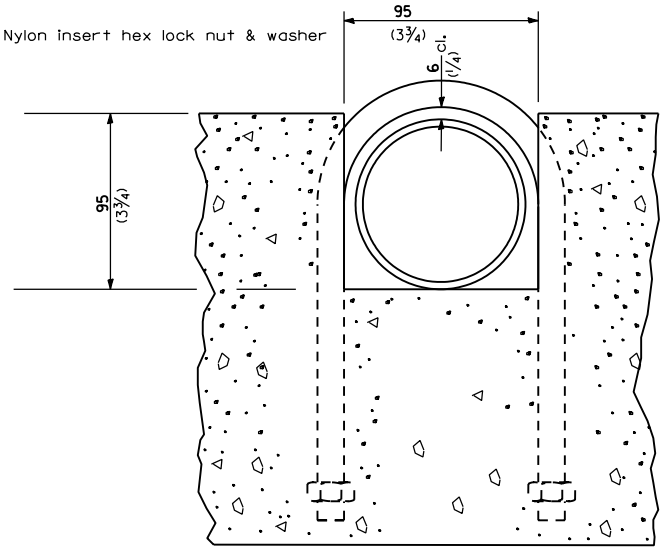

SECTION C-C

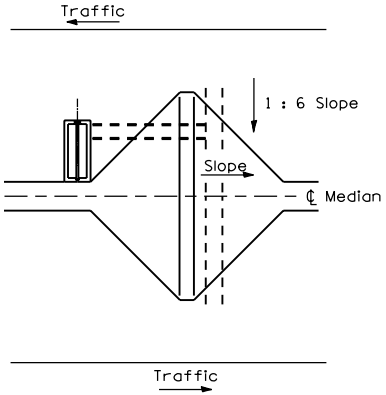

Sketch showing location and direction of box in relation to ℄ median.

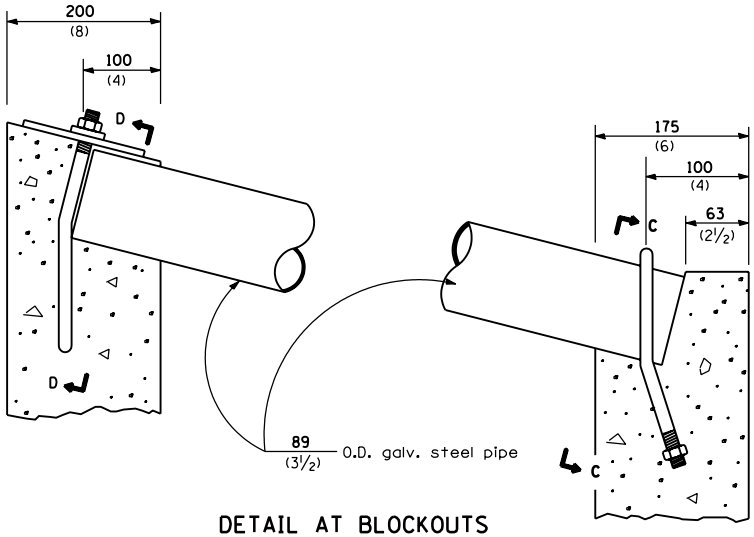

DETAIL AT BLOCKOUTS

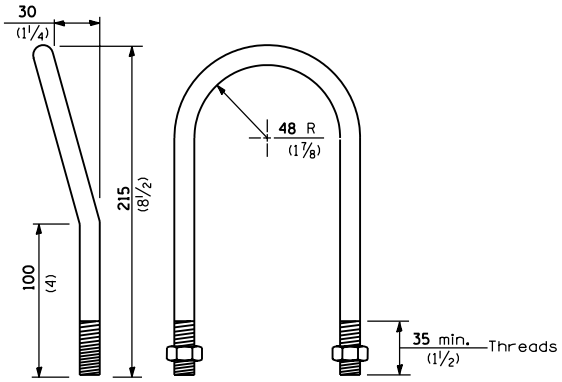

M12 (1/2) U BOLT

(2- required)

All dimensions are in millimeters (inches) unless otherwise shown.

Illinois Department of Transportation

PASSED January 1, 1997

ENGINEER OF POLICY AND PROCEDURES

APPROVED January 1, 1997

ENGINEER OF DESIGN AND ENVIRONMENT

ISSUED 1-1-97

INLET BOX
TYPE 600 (24) E

(Sheet 2 of 2)

STANDARD 542521