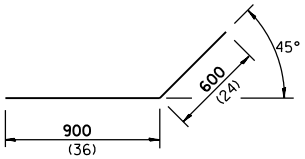

Bar h_2

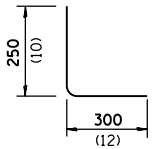

Bar L

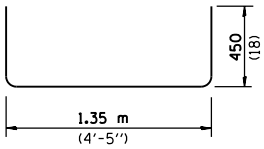

Bar u

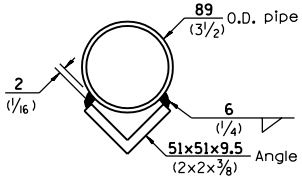

SECTION D-D

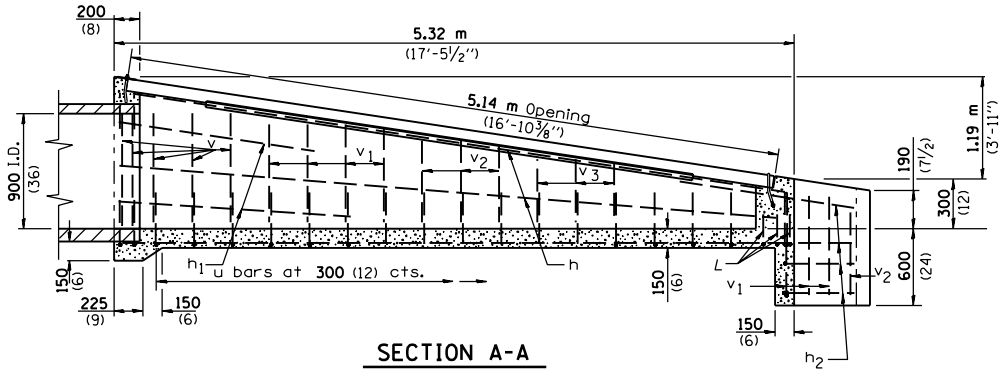

SECTION A-A

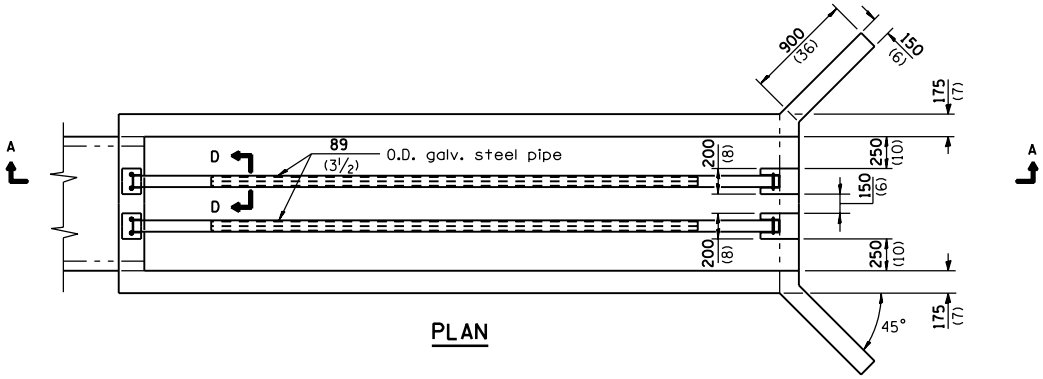

PLAN

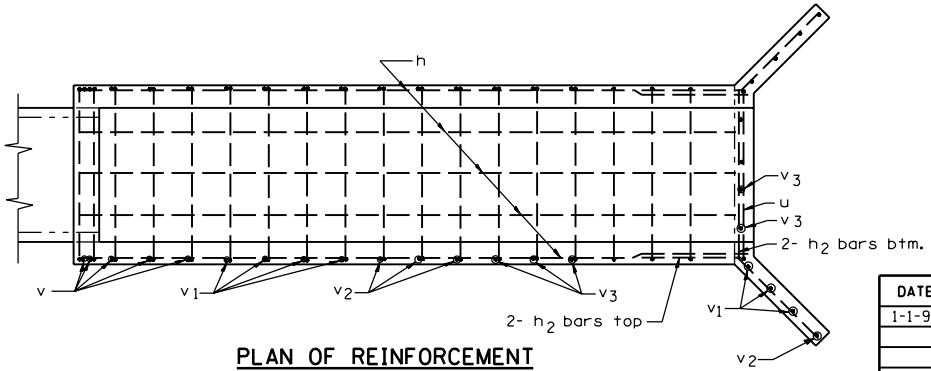

PLAN OF REINFORCEMENT

Material required for one inlet box

Bar	Qty.	Size	Length
h	9	No. 15 (No. 4)	5.18 m (17'-0")
h_1	4	No. 15 (No. 4)	1.90 m (6'-3")
h_2	8	No. 15 (No. 4)	1.50 m (5'-0")
L	6	No. 15 (No. 4)	550 (22)
u	21	No. 15 (No. 4)	2.25 m (7'-5")
v	10	No. 15 (No. 4)	910 (36)
v_1	14	No. 15 (No. 4)	760 (30)
v_2	8	No. 15 (No. 4)	610 (24)
v_3	10	No. 15 (No. 4)	460 (18)
Concrete		m^3 (cu. yds.)	3.0 (3.9)
Reinf. Bars		kg (lbs.)	236 (319)
Galv. Steel Pipe		89 O.D. (3½)	2 at 5.15 m 2 at (16'-10⅛")
Galv. Steel Angle		51x51x9.5 (2x2x⅜)	2 at 3.90 m 2 at (12'-10")

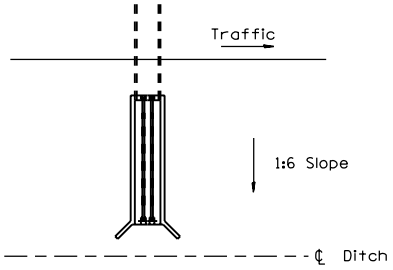

Sketch showing location and direction of box in relation to ℄ of ditch.

GENERAL NOTES

All slope ratios are expressed as units of vertical displacement to units of horizontal displacement (V:H).

All dimensions are in millimeters (inches) unless otherwise shown.

Illinois Department of Transportation

PASSED January 1, 1997
ENGINEER OF POLICY AND PROCEDURES

APPROVED January 1, 1997
ENGINEER OF DESIGN AND ENVIRONMENT

ISSUED 1-1-97

DATE	REVISIONS
1-1-97	Renum. Standard 2248-9.
6-15-94	Moved G.N. to Specs.
	Revised title. Added
	Metric and slope note.

INLET BOX TYPE 900 (36) A

(Sheet 1 of 2)

STANDARD 542536

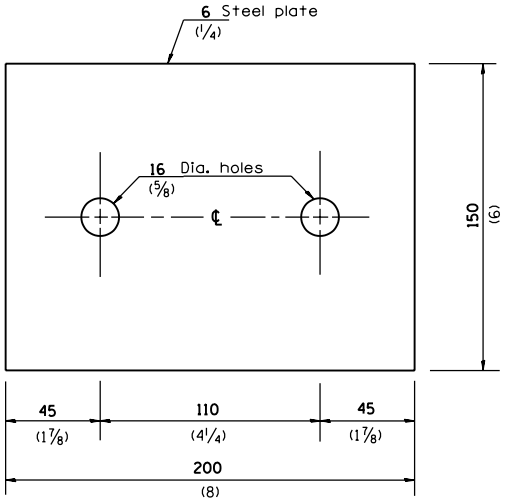

TOP ANCHOR PLATE

(2 - required)

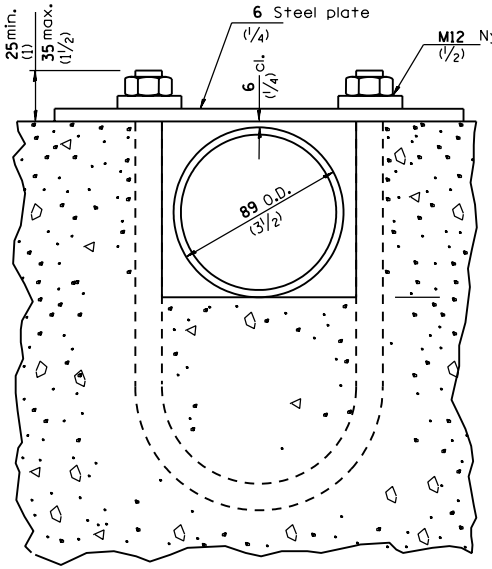

SECTION B-B

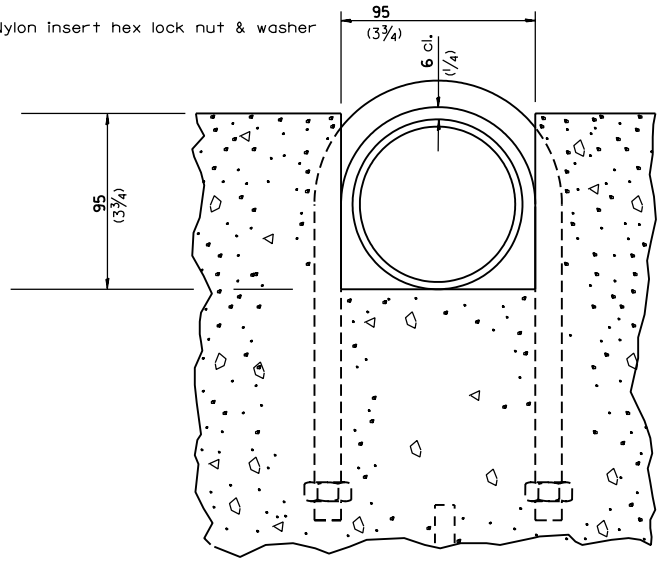

SECTION C-C

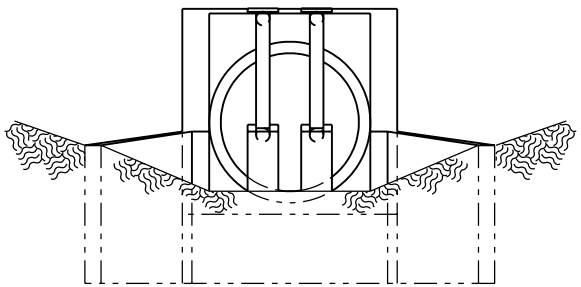

END VIEW

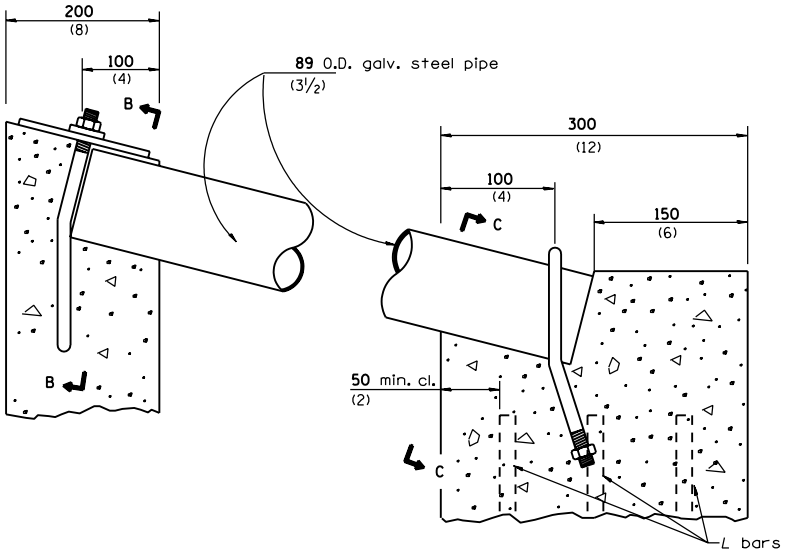

DETAIL AT BLOCKOUTS

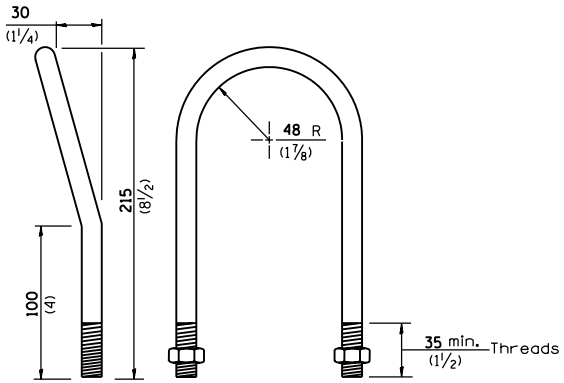

M12 (1/2) U BOLT

(4 - required)

All dimensions are in millimeters (inches) unless otherwise shown.

Illinois Department of Transportation

PASSED January 1, 1997

ENGINEER OF POLICY AND PROCEDURES

APPROVED January 1, 1997

ENGINEER OF DESIGN AND ENVIRONMENT

ISSUED 1-1-97

INLET BOX
TYPE 900 (36) A

(Sheet 2 of 2)

STANDARD 542536