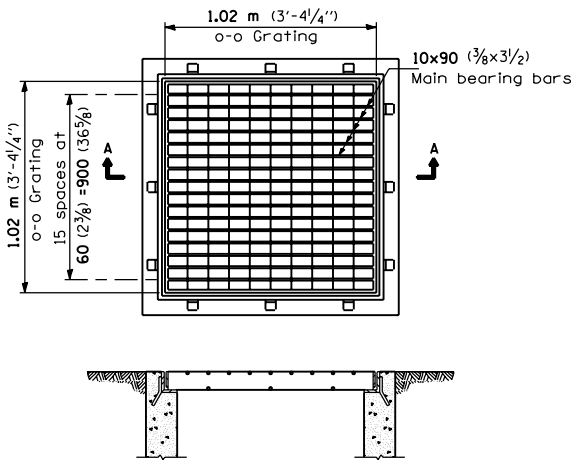

SECTION A-A

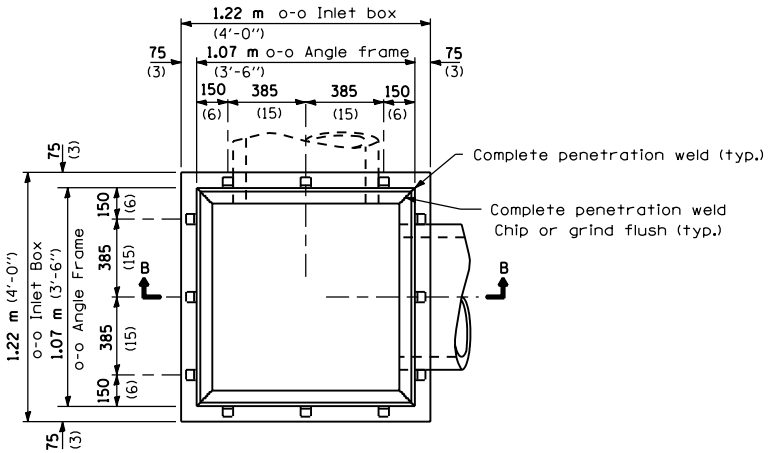

PLAN

(Grating omitted for clarity)

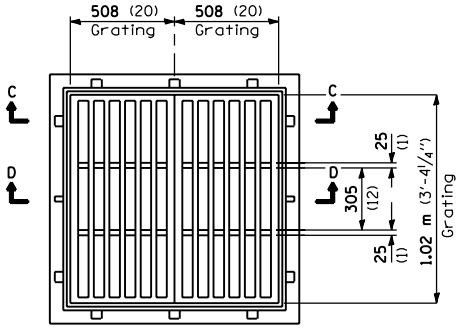

SECTION C-C

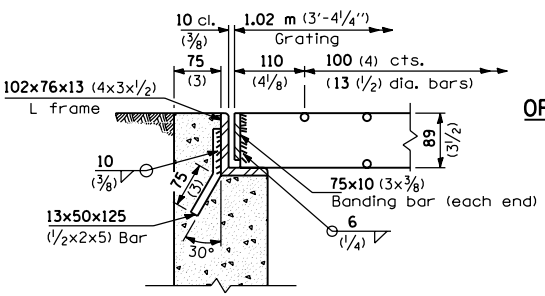

STEEL FRAME & GRATE

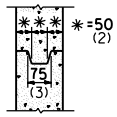

DETAIL of OPTIONAL JOINT

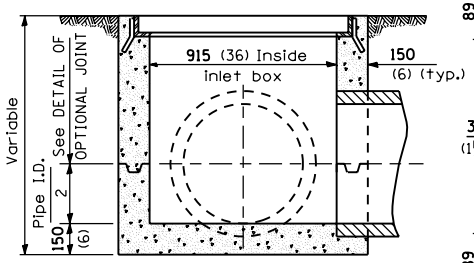

SECTION B-B

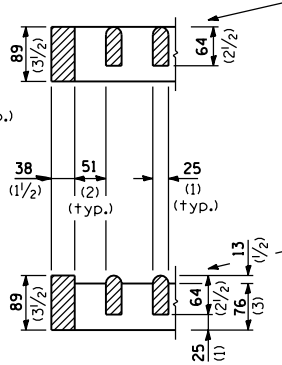

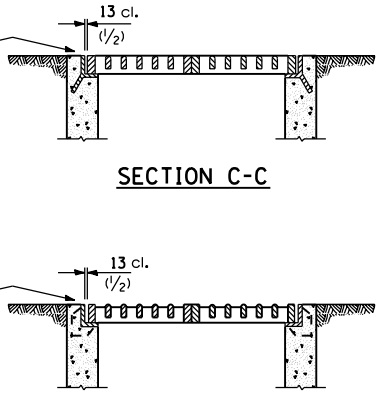

SECTION D-D

CAST FRAME & GRATE

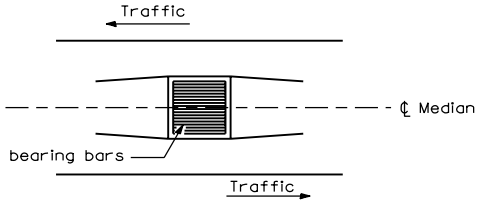

Sketch showing location and direction of main bearing bars in relation to ℄ median

All dimensions are in millimeters (inches) unless otherwise shown.

Illinois Department of Transportation

PASSED January 1, 1997

ENGINEER OF POLICY AND PROCEDURES

APPROVED January 1, 1997

ENGINEER OF DESIGN AND ENVIRONMENT

ISSUED 1-1-97

DATE	REVISIONS
1-1-97	Renum. Standard 2240-6.
6-15-94	Moved G.N. to Specs.
	Added Metric.

FLUSH INLET BOX FOR MEDIAN

STANDARD 542546