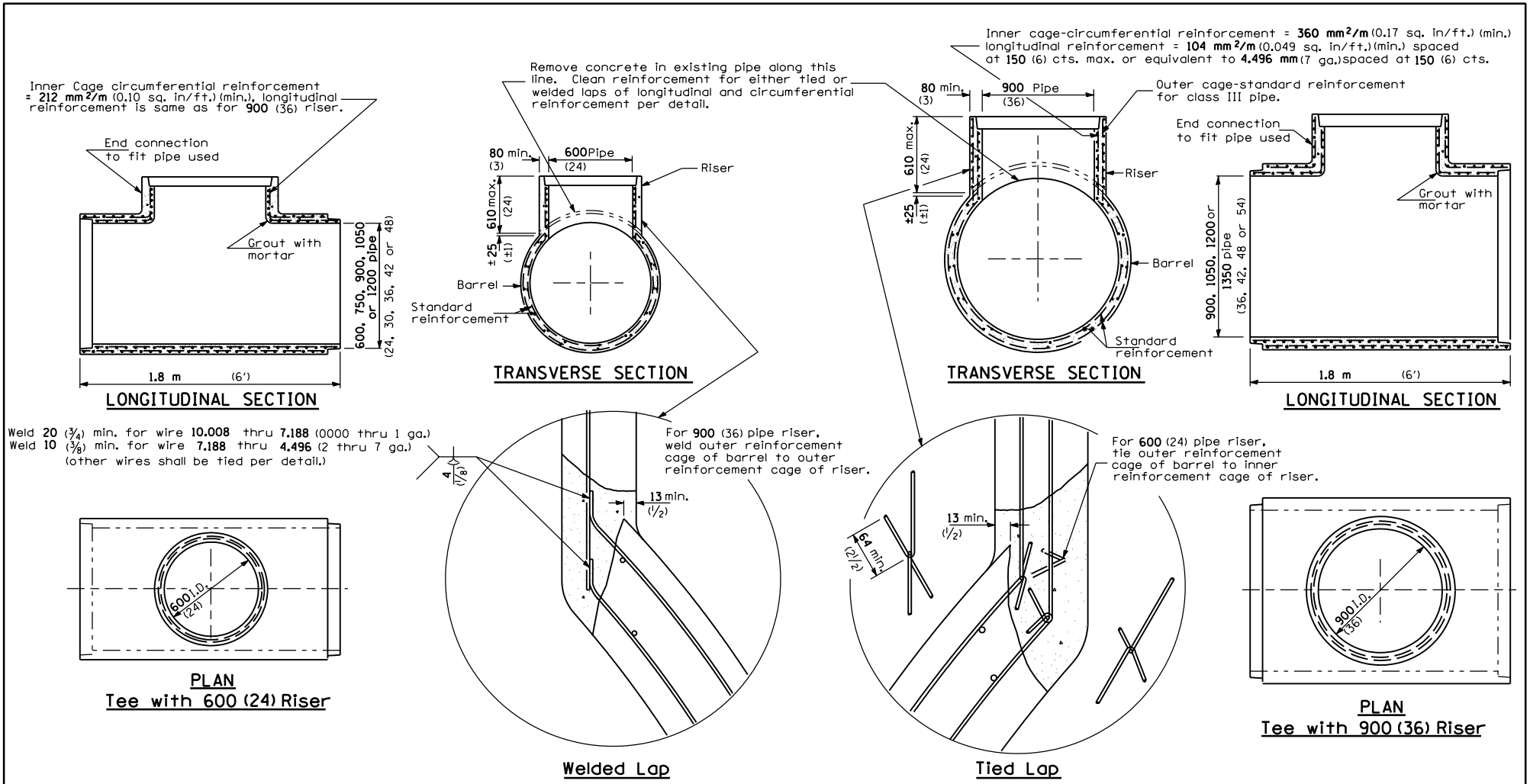


All dimensions are in millimeters (inches) unless otherwise shown.

Illinois Department of Transportation

APPROVED January 1, 1997
Ralph E. Anderson
ENGINEER OF BRIDGES AND STRUCTURES

APPROVED January 1, 1997
Gary Hamdal
ENGINEER OF DESIGN AND ENVIRONMENT

ISSUED 1-1-97

| DATE | REVISIONS |
|---|---|
| 1-1-97 | Renum. Standard 2263-4. |
| | |
| | |
| 6-15-94 | Moved G.N. to Specs. |
| | Added Metric. |
| | |

# REINFORCED CONCRETE PIPE TEE

**STANDARD 542606**