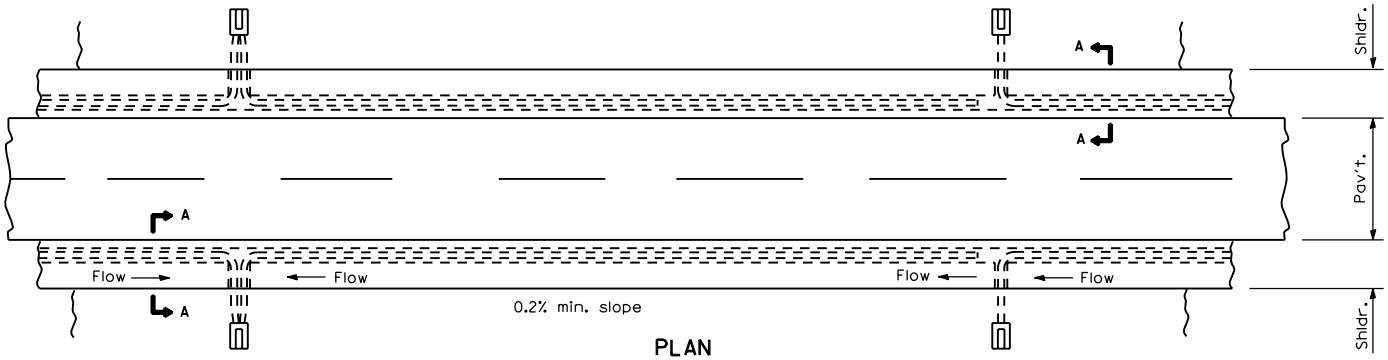

PLAN

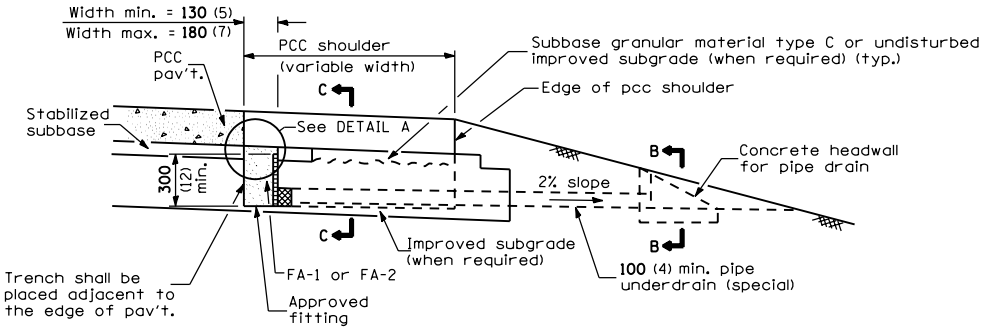

SECTION A-A

(PCC Shoulder)

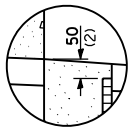

DETAIL A

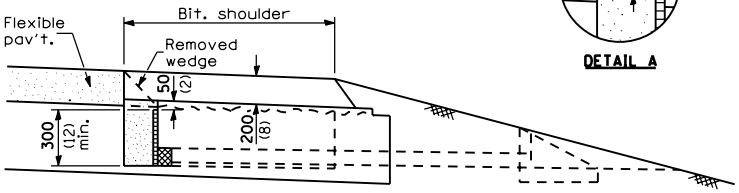

SECTION A-A

(Bit. Shoulder)

(Dimensions and notes not shown shall be as shown in the above Section A-A)

NEW CONSTRUCTION
(TRENCH FOR DRAINAGE MAT UNDERDRAIN OPTION)

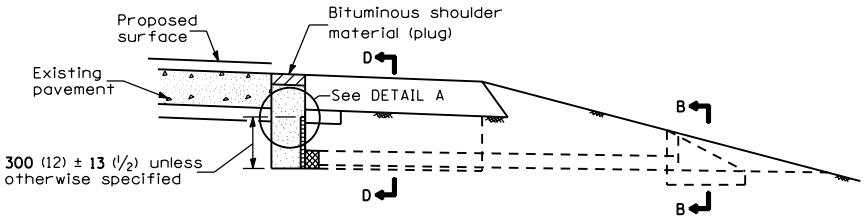

SECTION A-A

EXISTING CONSTRUCTION
(TRENCH FOR DRAINAGE MAT UNDERDRAIN OPTION)

(Except as noted or shown, dimensions and notes specified for Existing Construction are the same as those of New Construction)

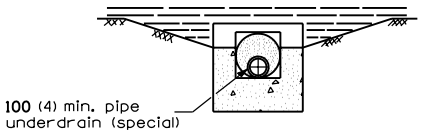

SECTION B-B

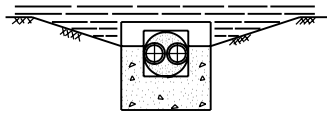

SECTION B-B

(Sag locations)

GENERAL NOTES

See Standard 601101 for details of concrete headwall.

See Standards 482001, 482006 and 483001 for details of shoulders not shown.

The 600 mm (24") radius on the drainage fitting is only a minimum. Larger radii meeting the approval of the Engineer maybe substitued.

All dimensions are in millimeters (inches) unless otherwise shown.

Illinois Department of Transportation

PASSED January 1, 1997
ENGINEER OF POLICY AND PROCEDURES

APPROVED January 1, 1997
ENGINEER OF DESIGN AND ENVIRONMENT

ISSUED 1-1-97

DATE	REVISIONS
1-1-97	Renum. Standard 2327-12.
	Rev. loc. of mat u.d.
	Decr. depth of pipe u.d.
6-15-94	Moved G.N. to Specs.
	Moved Design Notes.
	Added Metric.

SUB-SURFACE DRAINS

(Sheet 1 of 2)

STANDARD 601001

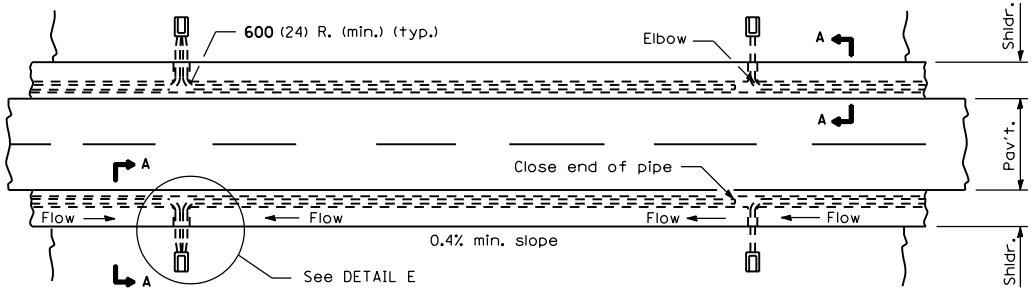

PLAN

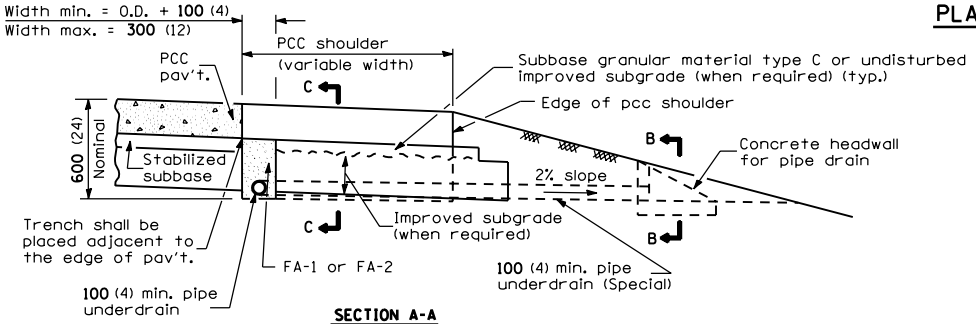

SECTION A-A

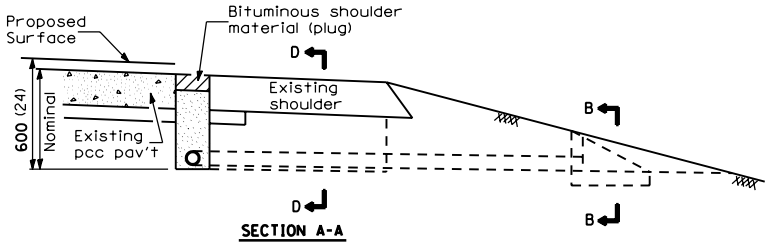

SECTION A-A

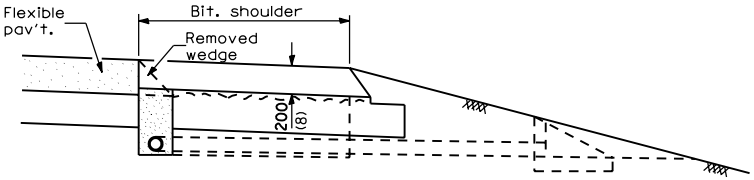

SECTION A-A
(Dimensions and notes not shown shall be as shown in the above Section A-A)

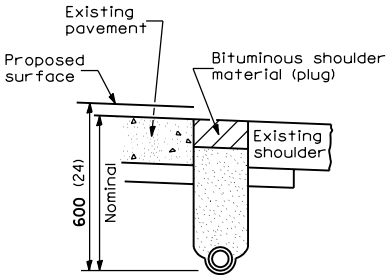

TRENCH FOR CORRUGATED POLYETHYLENE TUBING ALTERNATE

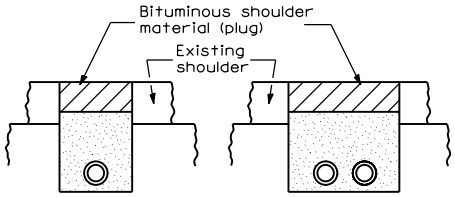

SECTION D-D

SECTION D-D
(Sag Locations)

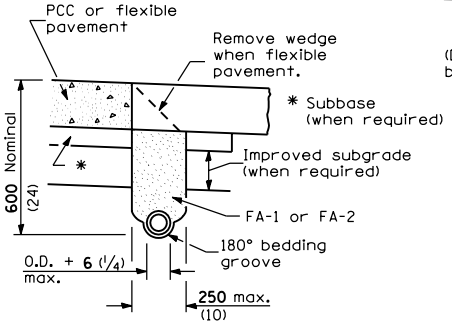

TRENCH FOR CORRUGATED POLYETHYLENE TUBING ALTERNATE

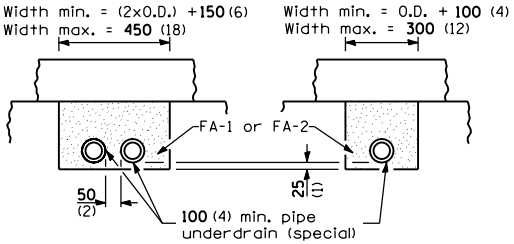

SECTION C-C
(Sag locations)

SECTION C-C

NEW CONSTRUCTION

EXISTING CONSTRUCTION

(Except as noted or shown, dimensions nd notes specified for Existing Construction are the same as those of New Construction)

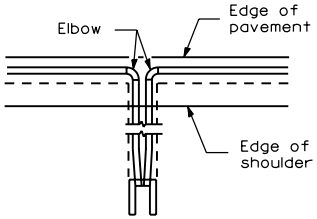

DETAIL E

All dimensions are in millimeters (inches) unless otherwise shown.

Illinois Department of Transportation

PASSED January 1, 1997
ENGINEER OF POLICY AND PROCEDURES
APPROVED January 1, 1997
ENGINEER OF DESIGN AND ENVIRONMENT

ISSUED 1-1-97

SUB-SURFACE DRAINS

(Sheet 2 of 2)

STANDARD 601001