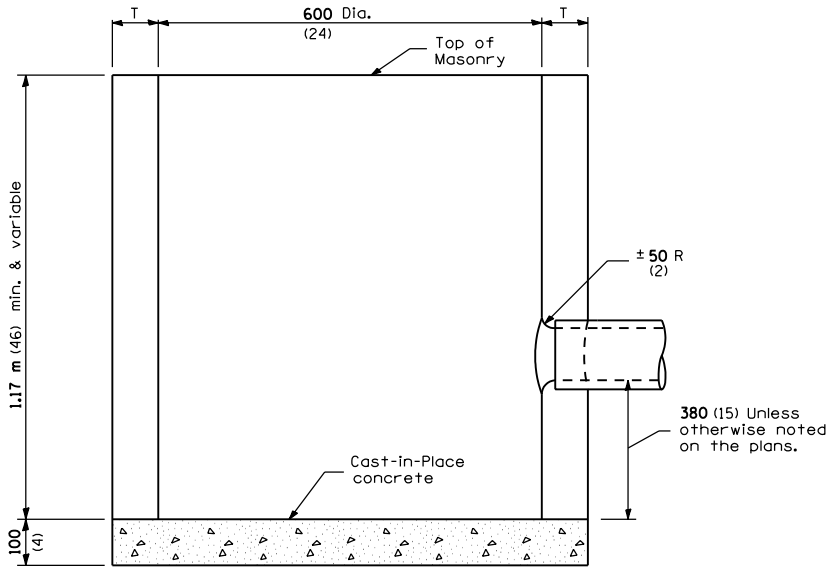

ELEVATION

ALTERNATE MATERIALS FOR WALLS	T (min)
Precast Reinforced Concrete Section	75 (3)
Concrete Masonry Unit	125 (5)
Cast-in-Place Concrete	150 (6)
Brick Masonry	200 (8)

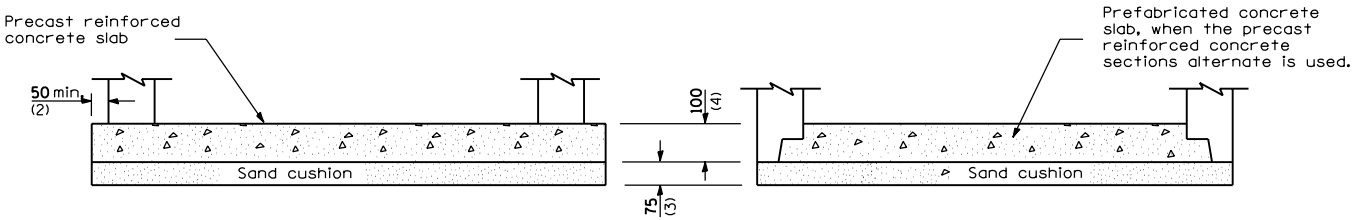

ALTERNATE BOTTOM SLAB

All dimensions are in millimeters (inches) unless otherwise shown.

Illinois Department of Transportation

PASSED January 1, 1997
ENGINEER OF POLICY AND PROCEDURES

APPROVED January 1, 1997
ENGINEER OF DESIGN AND ENVIRONMENT

ISSUED 1-1-97

DATE	REVISIONS
1-1-97	Renum. Standard 1538-6.
6-15-94	Moved note to Specs.
	Added Metric.

CATCH BASIN TYPE C

STANDARD 602011