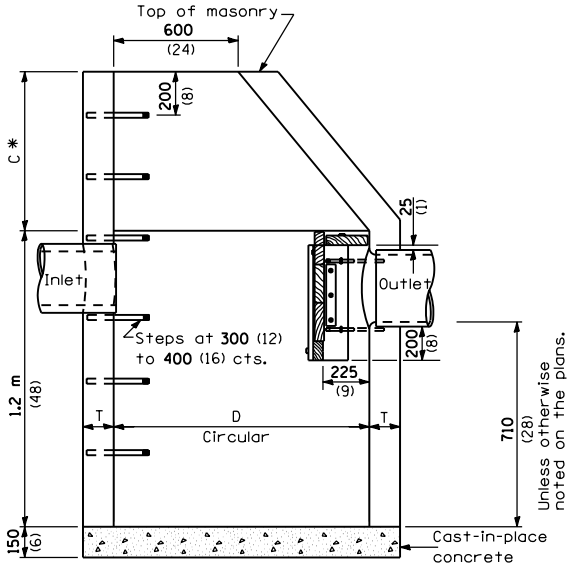

ELEVATION

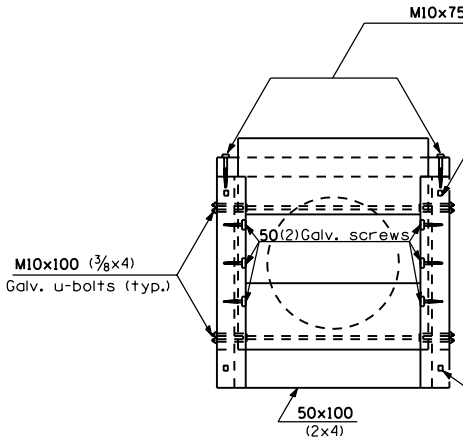

ELEVATION

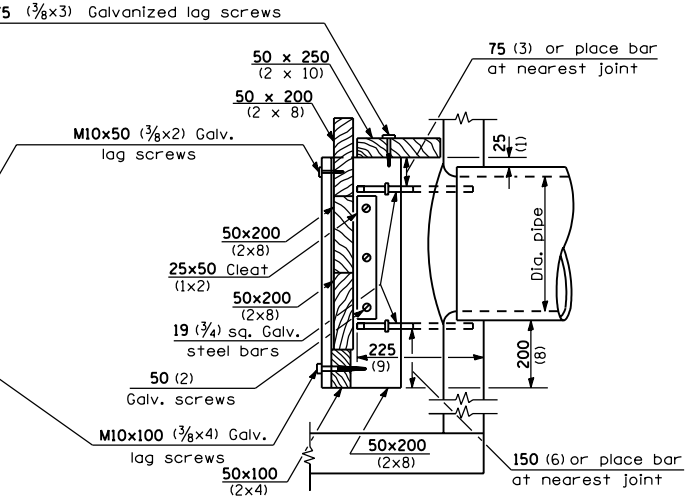

SECTION A-A

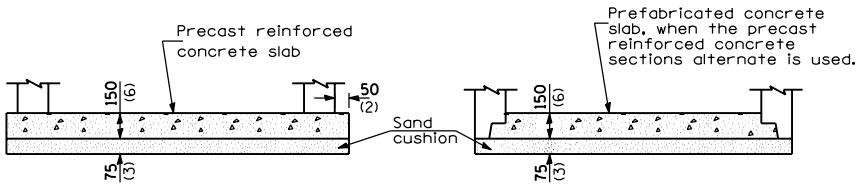

ALTERNATE BOTTOM SLAB

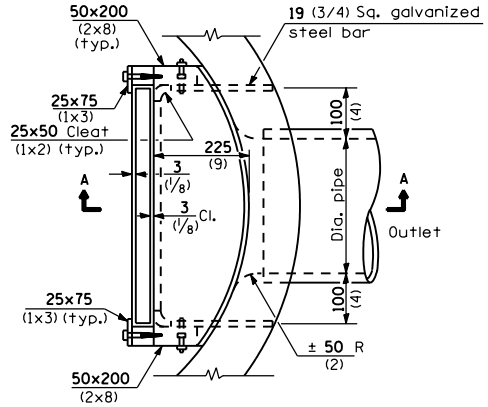

PLAN

GENERAL NOTES

All Catch Basins shall be 1.2 m (4'-0") in diameter unless otherwise noted on the plans.

See Standard 602701 for details of Steps.

* Dimension C for Precast Reinforced Concrete Riser may vary from the dimension given to plus 150 mm (6").

See Standard 602601 for optional Precast Reinforced Concrete Flat Slab Top.

All dimensions are in millimeters (inches) unless otherwise shown.

ALTERNATE MATERIALS FOR WALLS	D	C	T (min.)
Concrete Masonry Unit	900 (36) 1.20 m (4'-0")	380 (15) 760 (30)	125 (5) 125 (5)
Brick Masonry	900 (36) 1.20 m (4'-0")	380 (15) 760 (30)	200 (8) 200 (8)
Precast Reinforced Concrete Section	900 (36) 1.20 m (4'-0")	380 (15) 760 (30)	75 (3) 100 (4)
Cast-in-Place Concrete	900 (36) 1.20 m (4'-0")	380 (15) 760 (30)	150 (6) 150 (6)

Illinois Department of Transportation

PASSED January 1, 1997
ENGINEER OF POLICY AND PROCEDURES

APPROVED January 1, 1997
ENGINEER OF DESIGN AND ENVIRONMENT

ISSUED 1-1-97

DATE	REVISIONS
1-1-97	Renum. Standard 1886-9.
	Revised 1st G.N.
6-15-94	Moved G.N. to Specs.
	Deleted step details &
	Cook County note.

CATCH BASIN TYPE D

STANDARD 602016