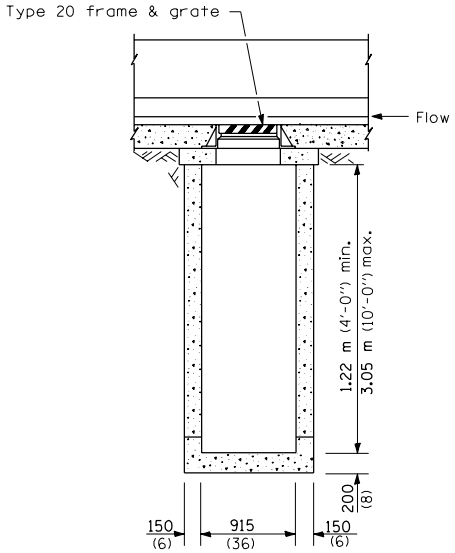

FRONT ELEVATION - TYPE 1

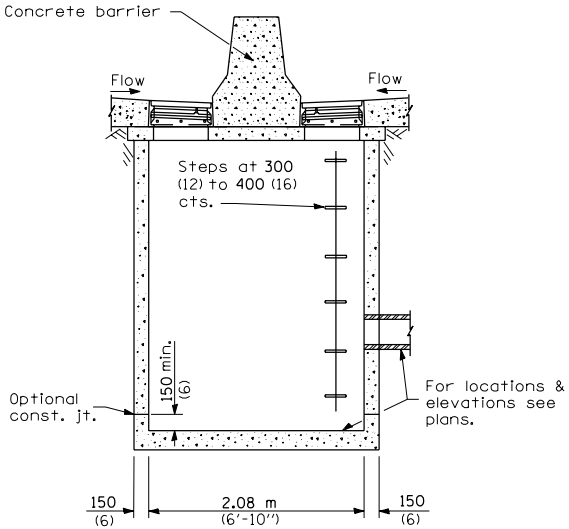

SIDE ELEVATION - TYPE 1 & 2

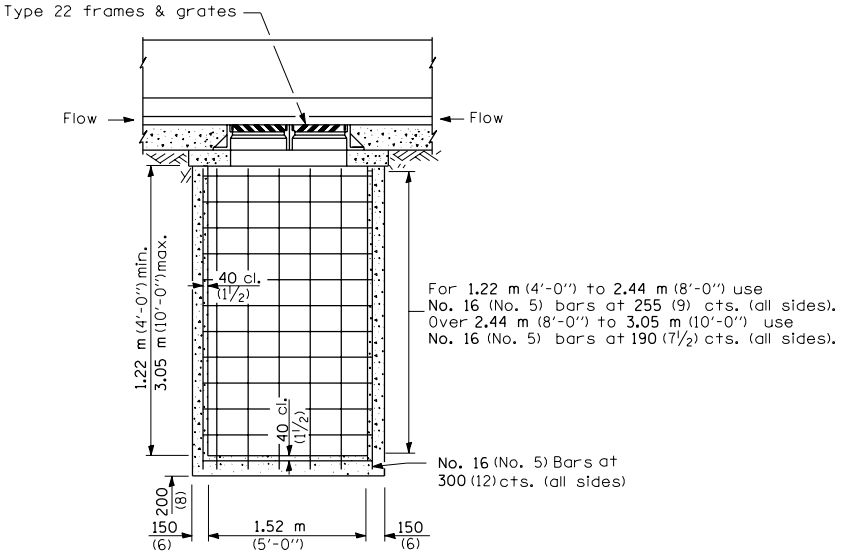

FRONT ELEVATION - TYPE 2

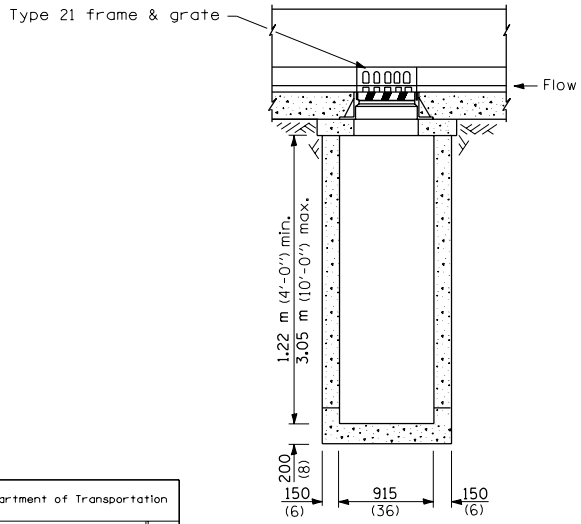

FRONT ELEVATION - TYPE 3

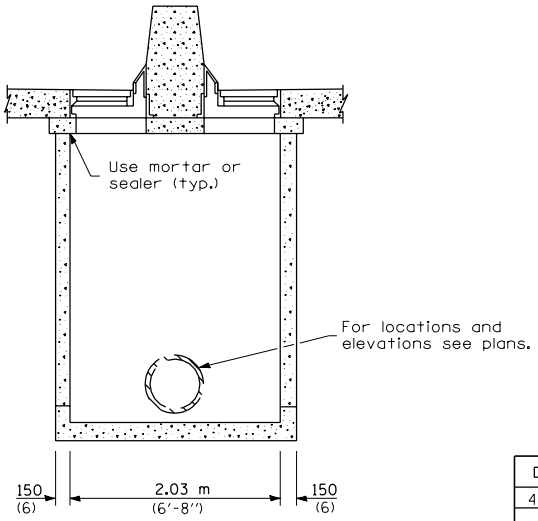

SIDE ELEVATION - TYPE 3

GENERAL NOTES

These structures are for use with concrete barrier, double face, 815mm (32 inch) height (Standard 637001).

The reinforcement shown in the front elevation of the Type 2 is typical for both elevations of all types.

See Standard 602701 for details of steps.

Exposed edges shall be beveled 19 mm (¾").

All dimensions are in millimeters (inches) unless otherwise shown.

Illinois Department of Transportation

PASSED April 1, 2004
ENGINEER OF POLICY AND PROCEDURES
APPROVED April 1, 2004
ENGINEER OF DESIGN AND ENVIRONMENT

ISSUED 1-1-97

DATE	REVISIONS
4-1-04	Revised to fit Fshape barrier.
1-1-97	Renum. Standard 2384-2.
	Deleted DN Symbol.

DRAINAGE STRUCTURES TYPES 1, 2 & 3

(Sheet 1 of 2)

STANDARD 602101-01

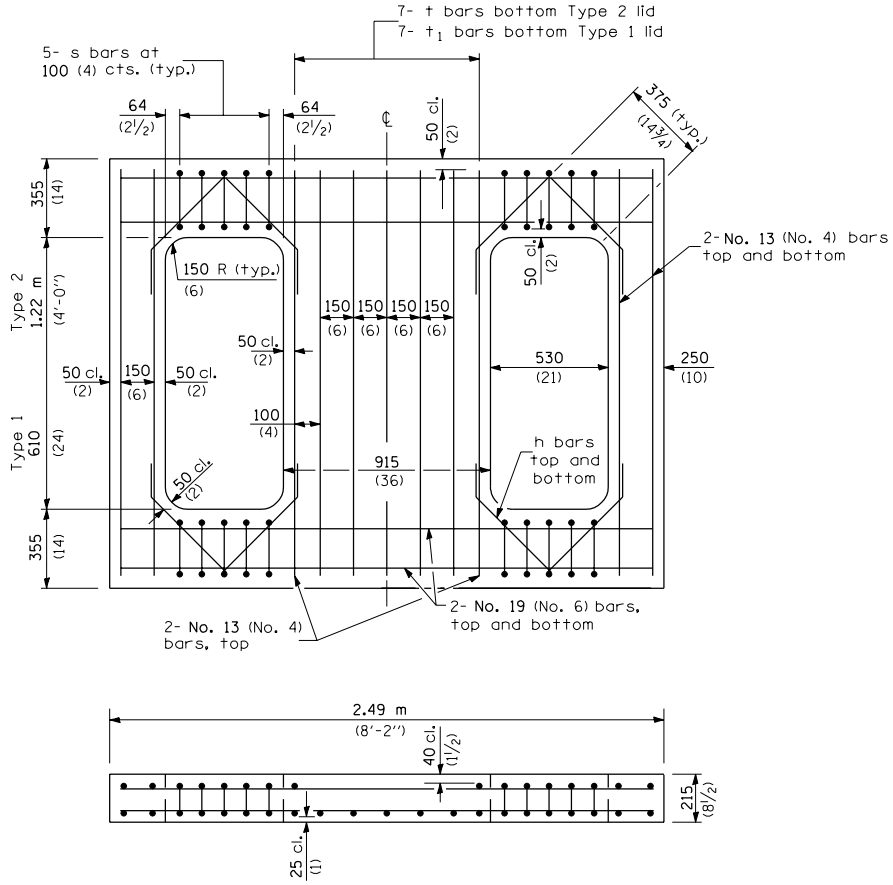

REINFORCED LID - TYPE 1 & 2

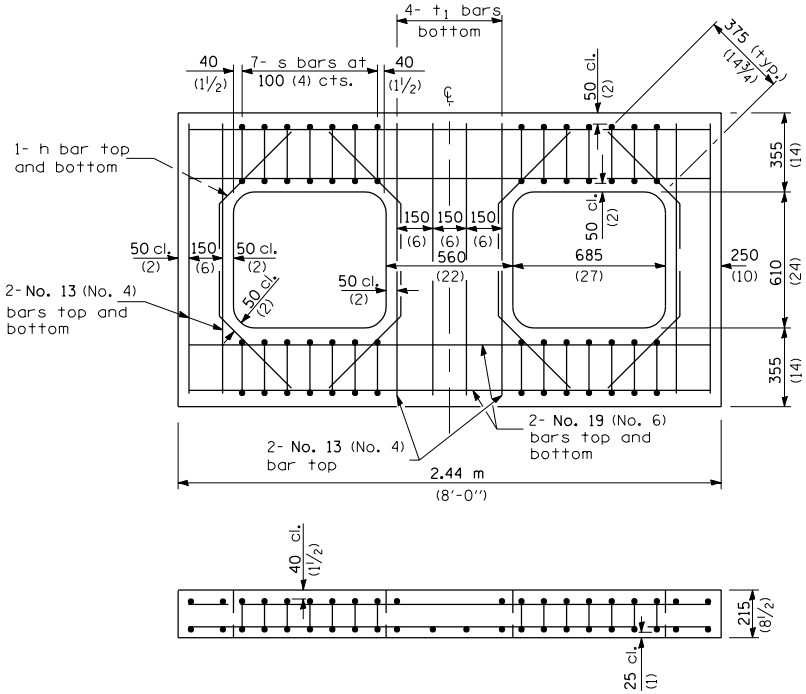

REINFORCED LID - TYPE 3

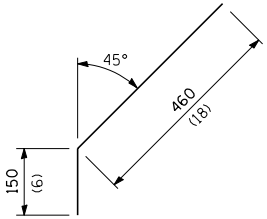

No. 13 (No. 4) Bar h

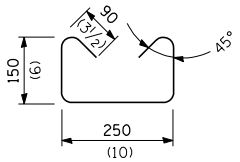

No. 10 (No. 3) Bar s

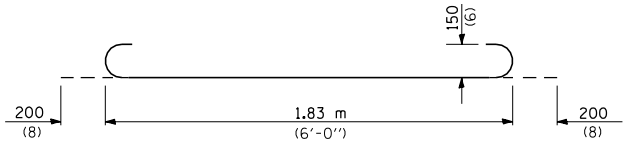

No. 19 (No. 6) Bar t

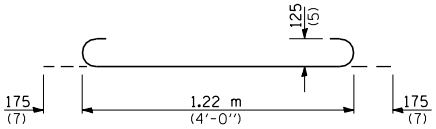

No. 16 (No. 5) Bar t_1

All dimensions are in millimeters (inches) unless otherwise shown.

Illinois Department of Transportation

PASSED April 1, 2004
ENGINEER OF POLICY AND PROCEDURES
APPROVED April 1, 2004
ENGINEER OF DESIGN AND ENVIRONMENT

ISSUED 1-1-97

DRAINAGE STRUCTURES TYPES 1, 2 & 3

(Sheet 2 of 2)

STANDARD 602101-01