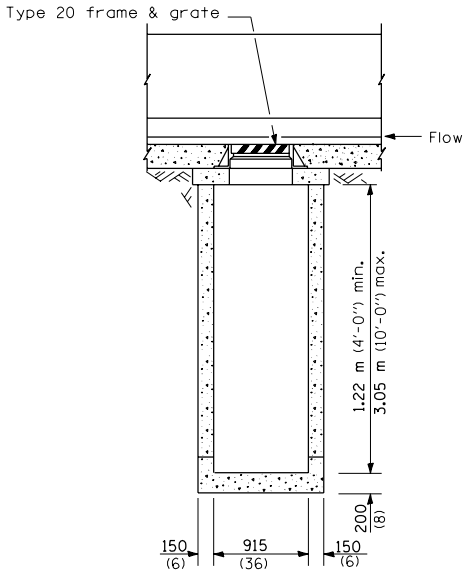

FRONT ELEVATION - TYPE 4

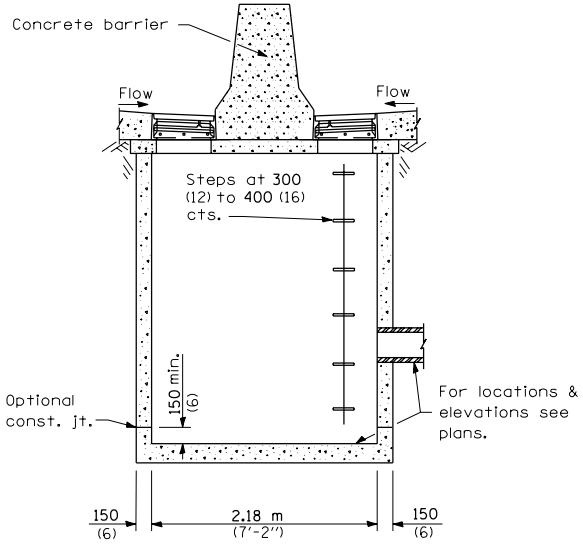

SIDE ELEVATION - TYPE 4 & 5

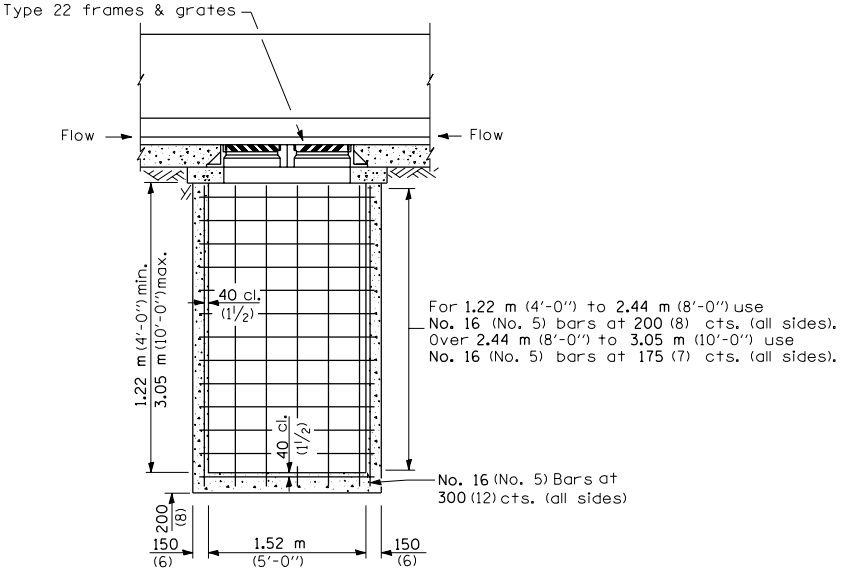

FRONT ELEVATION - TYPE 5

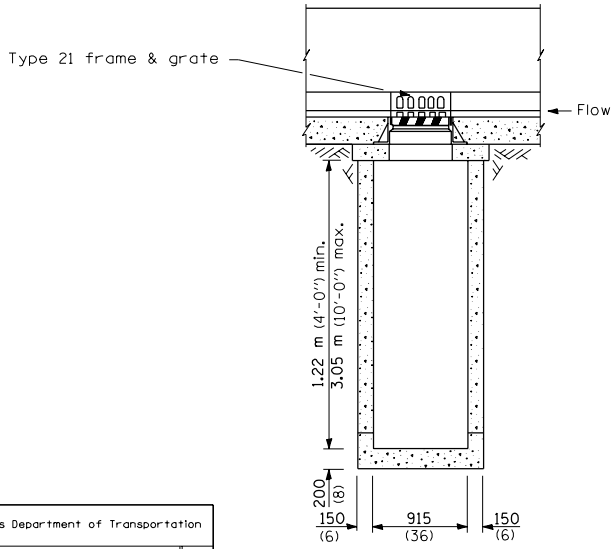

FRONT ELEVATION - TYPE 6

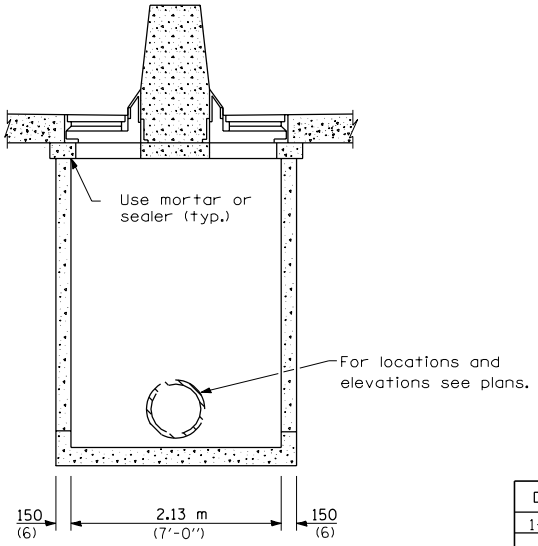

SIDE ELEVATION - TYPE 6

GENERAL NOTES

These structures are for use with concrete barrier, double face, 1065mm (42 inch) height (Standard 637006).

The reinforcement shown in the front elevation of the Type 2 is typical for both elevations of all types.

See Standard 602701 for details of steps.

Exposed edges shall be beveled 19 mm (¾").

All dimensions are in millimeters (inches) unless otherwise shown.

Illinois Department of Transportation

PASSED April 1, 2004
Michael Brand
ENGINEER OF POLICY AND PROCEDURES
APPROVED April 1, 2004
Michael L. Hine
ENGINEER OF DESIGN AND ENVIRONMENT

ISSUED 4-1-04

DATE	REVISIONS
1-1-04	New standard

DRAINAGE STRUCTURES TYPES 4, 5 & 6

(Sheet 1 of 2)

STANDARD 602106

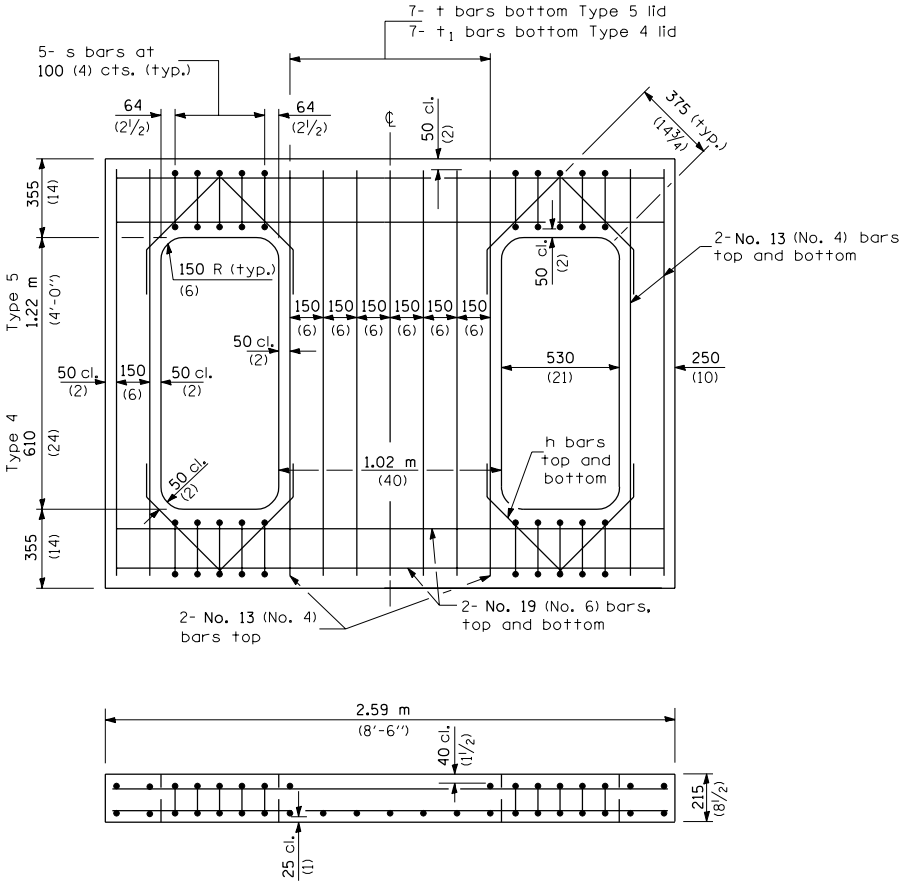

REINFORCED LID - TYPE 4 & 5

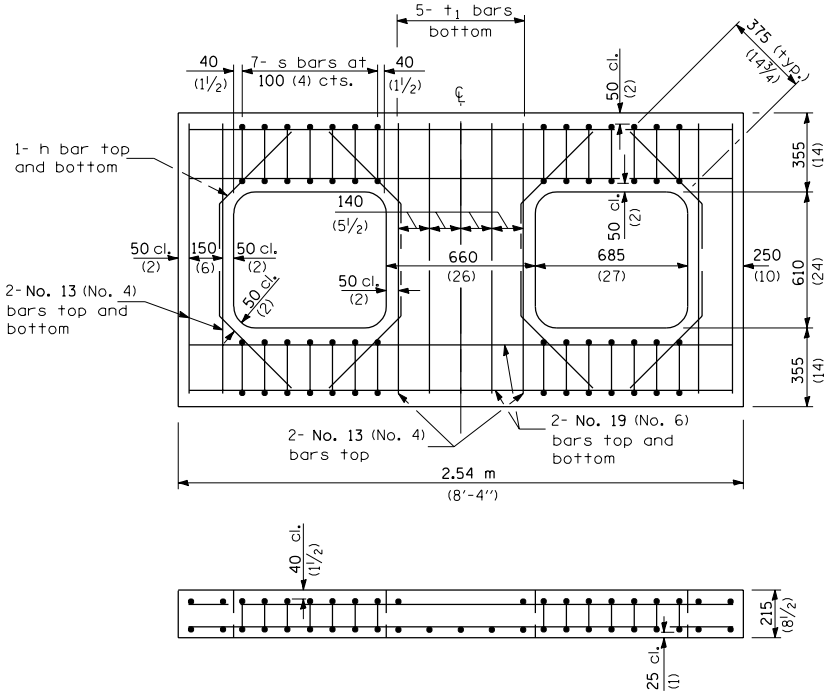

REINFORCED LID - TYPE 6

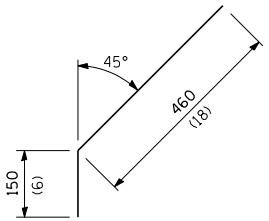

No. 13 (No. 4) Bar h

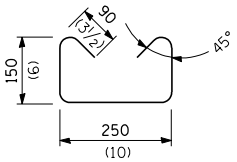

No. 10 (No. 3) Bar s

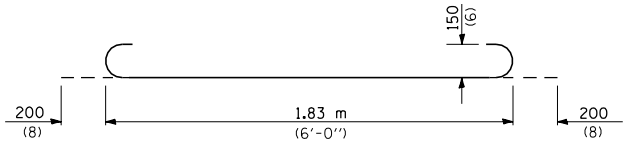

No. 19 (No. 6) Bar t

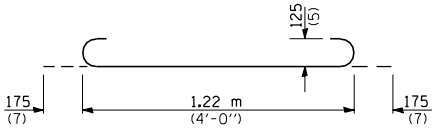

No. 16 (No. 5) Bar t1

All dimensions are in millimeters (inches) unless otherwise shown.

Illinois Department of Transportation

PASSED April 1, 2004
Michael Brand
ENGINEER OF POLICY AND PROCEDURES

APPROVED April 1, 2004
Michael L. Hine
ENGINEER OF DESIGN AND ENVIRONMENT

ISSUED 4-1-04

DRAINAGE STRUCTURES TYPES 4, 5 & 6

(Sheet 2 of 2)

STANDARD 602106