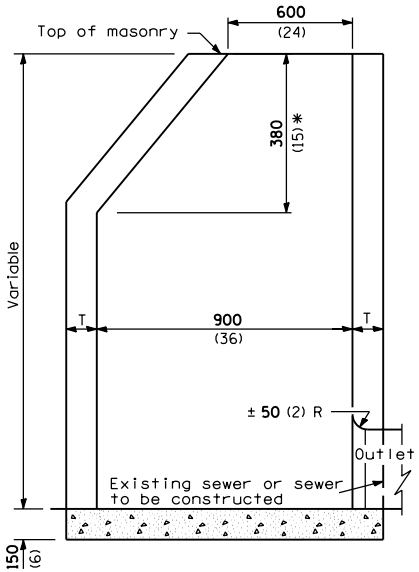

ELEVATION - ECCENTRIC

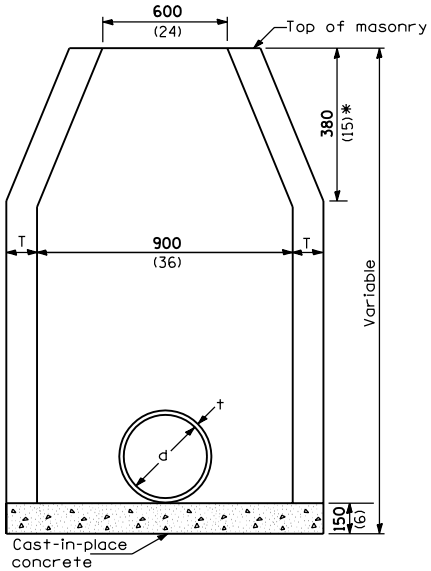

ELEVATION - CONCENTRIC

INLET WITH OUTLET PIPE ONLY

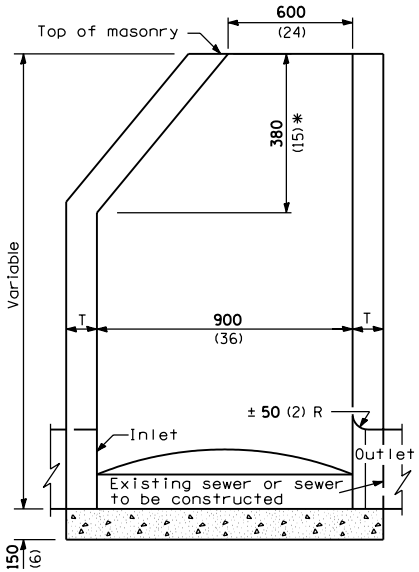

ELEVATION - ECCENTRIC

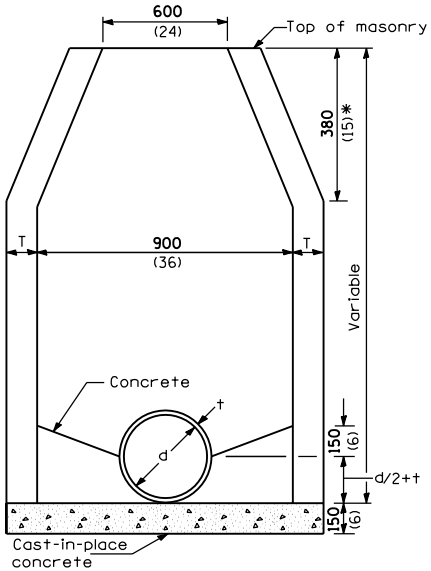

ELEVATION - CONCENTRIC

INLET WITH INLET AND OUTLET PIPES

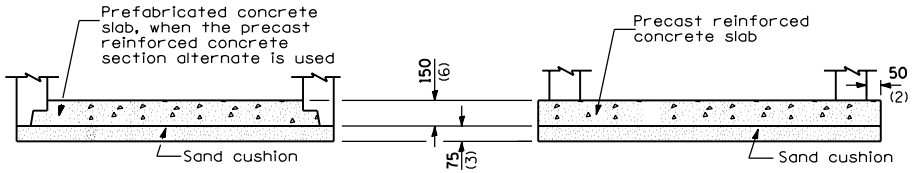

ALTERNATE BOTTOM SLAB

ALTERNATE MATERIALS FOR WALLS	T (min.)
Concrete Masonry Unit	125 (5)
Brick Masonry	200 (8)
Precast Reinforced Concrete Section	75 (3)
Cast-in-Place Concrete	150 (6)

GENERAL NOTES

* This dimension for Precast Reinforced Concrete Sections may vary from the dimension given to plus 150 mm (6").

See Standard 602601 for Optional Precast Reinforced Concrete Flat Slab Top.

All dimensions are in millimeters (inches) unless otherwise shown.

Illinois Department of Transportation

PASSED January 1, 1997
ENGINEER OF POLICY AND PROCEDURES

APPROVED January 1, 1997
ENGINEER OF DESIGN AND ENVIRONMENT

ISSUED 1-1-97

DATE	REVISIONS
1-1-97	Renum. Standard 2349-1.
	Added set of details
	with paved bottoms.
6-15-94	Moved G.N. to Specs.
	Added Metric.

INLET - TYPE B

STANDARD 602306