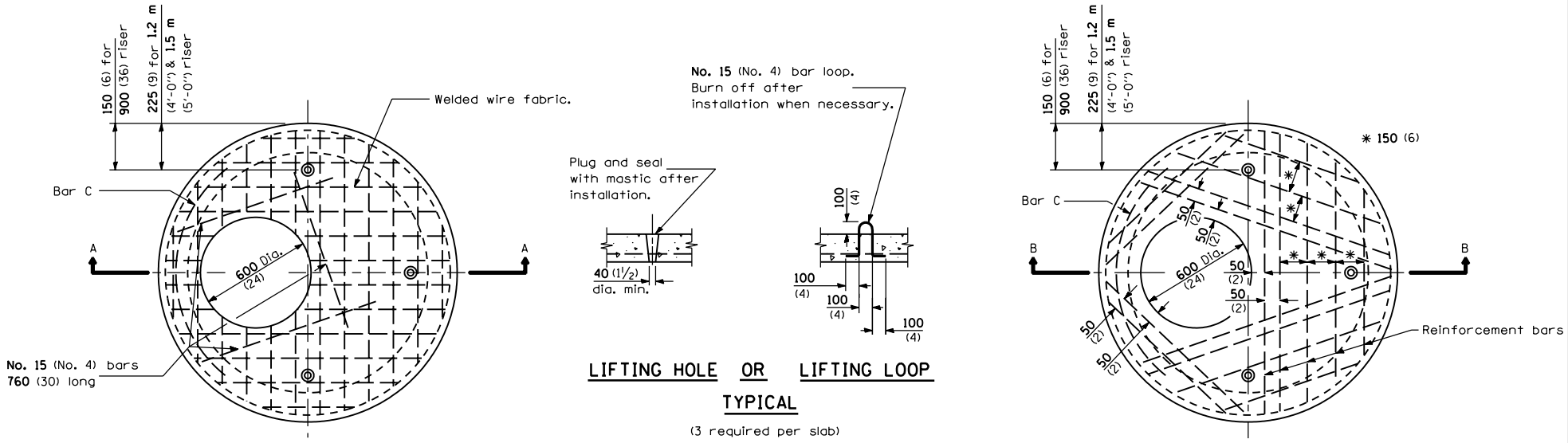

PLAN

(WELDED WIRE FABRIC)

LIFTING HOLE OR LIFTING LOOP

TYPICAL

(3 required per slab)

PLAN

(REINFORCEMENT BARS)

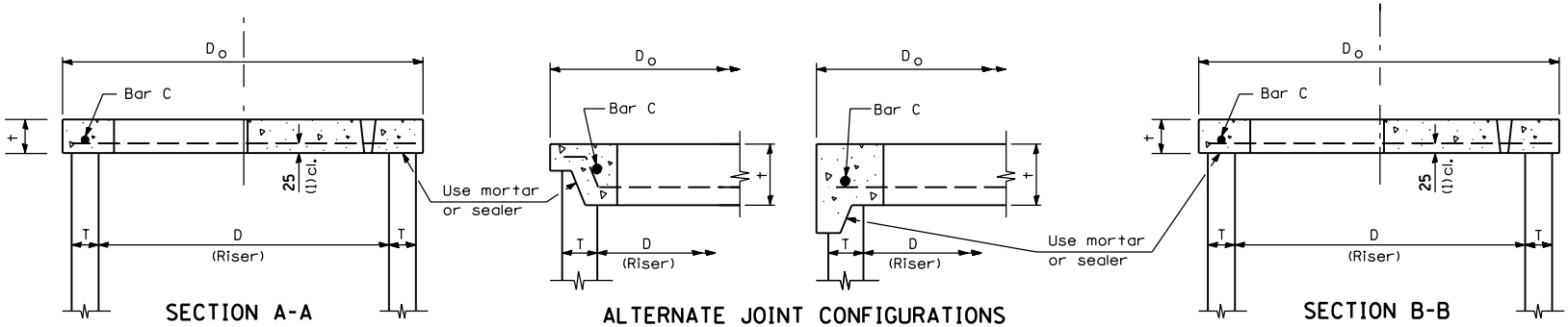

SECTION A-A

ALTERNATE JOINT CONFIGURATIONS

SECTION B-B

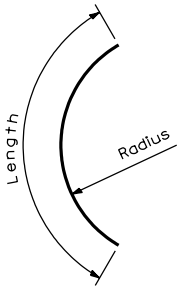

BAR C

TABLE

D	T	D_o (min.)	t	Reinforcement "A_s" W.W.F. each direction	OR Bar size	No. 15 (No. 4) Bar C Length	Radius
900 (36)	See applicable Standards	D + 2T	150 (6)	425 mm²/ m (.20 sq. inch/ft.)	No. 15 (No. 4)	1.2 m (4'-0")	480 (19)
1.2 m (4'-0")			150 (6)	740 mm²/ m (.35 sq. inch/ft.)	No. 15 (No. 5)	1.35 m (4'-6")	660 (26)
1.5 m (5'-0")			200 (8)	740 mm²/ m (.35 sq. inch/ft.)	No. 15 (No. 5)	1.5 m (5'-0")	810 (32)

GENERAL NOTES

The flat slab top may be used in lieu of the tapered tops shown on Standards 602001, 602011, 602306, 602401, or 602501 at the option of the Contractor or when field conditions prohibit the use of tapered tops.

All dimensions are in millimeters (inches) unless otherwise shown.

DATE	REVISIONS
1-1-97	Renum. Standard 2354-2
6-15-94	Moved G.N. to Specs.
	Added Metric.
	Revised title.

PRECAST REINFORCED CONCRETE FLAT SLAB TOP

STANDARD 602601

Illinois Department of Transportation

PASSED January 1, 1997
ENGINEER OF POLICY AND PROCEDURES

APPROVED January 1, 1997
ENGINEER OF DESIGN AND ENVIRONMENT

ISSUED 1-1-97