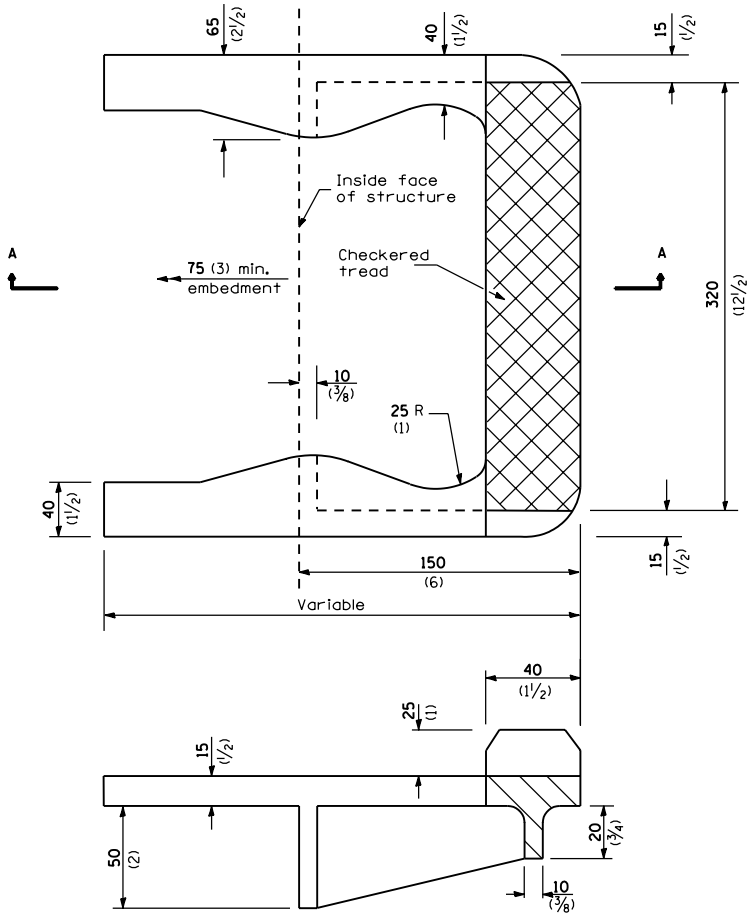

SECTION A-A

STRAIGHT WALL STRUCTURE

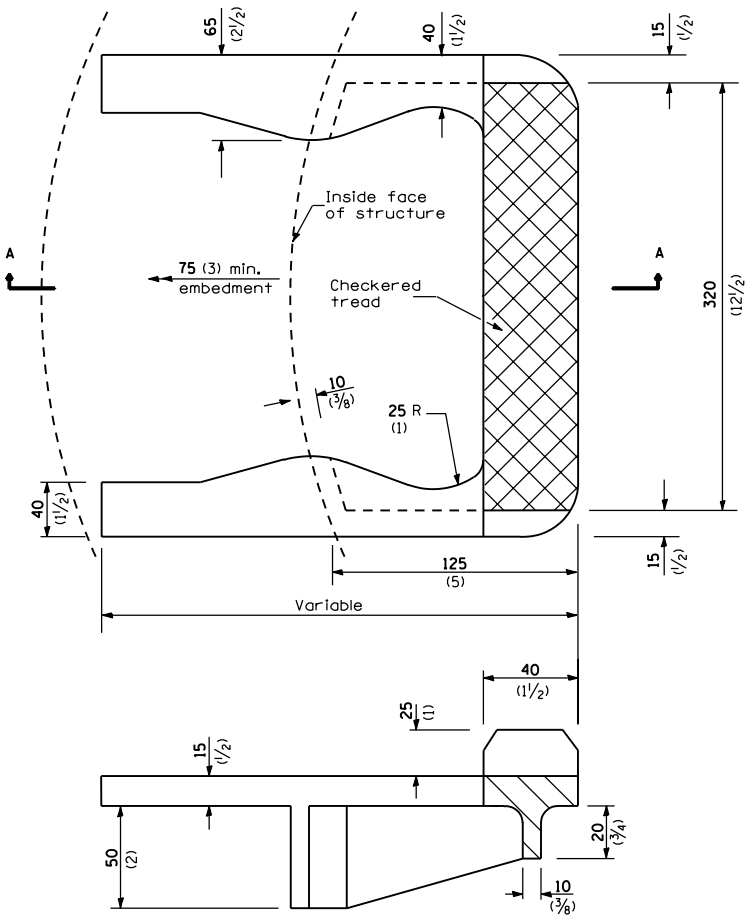

SECTION A-A

CIRCULAR WALL STRUCTURE

All dimensions are in millimeters (inches) unless otherwise shown.

Illinois Department of Transportation

PASSED January 1, 1997

ENGINEER OF POLICY AND PROCEDURES

APPROVED January 1, 1997

ENGINEER OF DESIGN AND ENVIRONMENT

ISSUED 1-1-97

DATE	REVISIONS
1-1-97	Renum. Standard 2447.
6-15-94	New standard.
	Deleted step details
	from other standards.

CAST IRON STEPS

STANDARD 602701