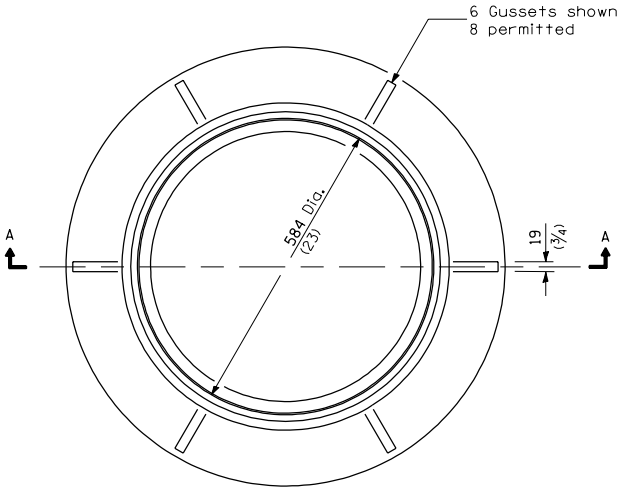

CAST FRAME

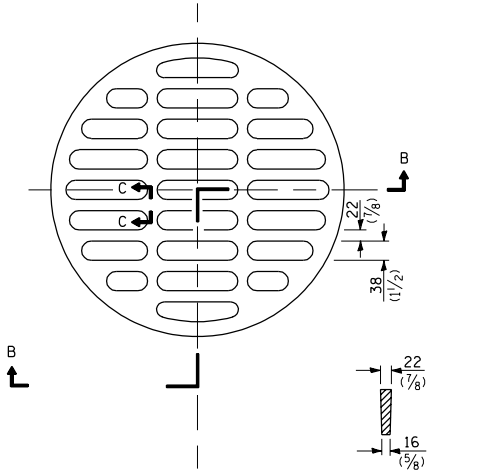

SECTION C-C

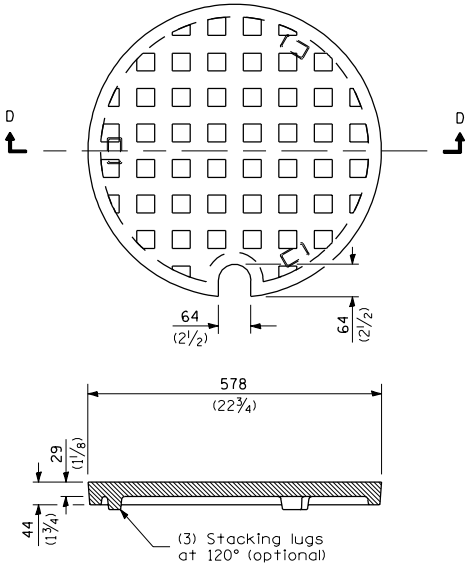

SECTION D-D

CAST CLOSED LID

Gray Iron Lid

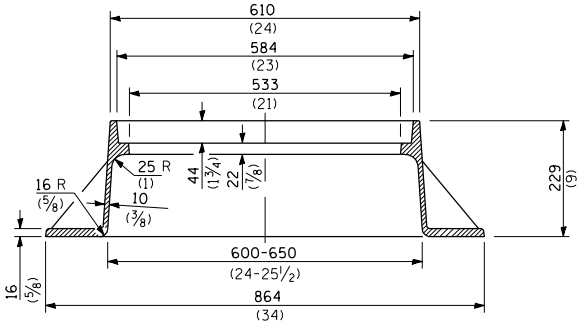

SECTION A-A

Gray Iron

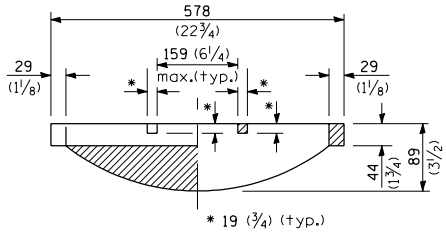

SECTION B-B

CAST OPEN LID

All dimensions are in millimeters (inches)
unless otherwise shown.

Illinois Department of Transportation

PASSED January 1, 2004
ENGINEER OF POLICY AND PROCEDURES

APPROVED January 1, 2004
ENGINEER OF DESIGN AND ENVIRONMENT

ISSUED 1-1-97

DATE	REVISIONS
1-1-04	Removed weights.
1-1-02	Changed wall thickness
	from 5/16 to 3/8.

FRAME AND LIDS TYPE 1

STANDARD 604001-02