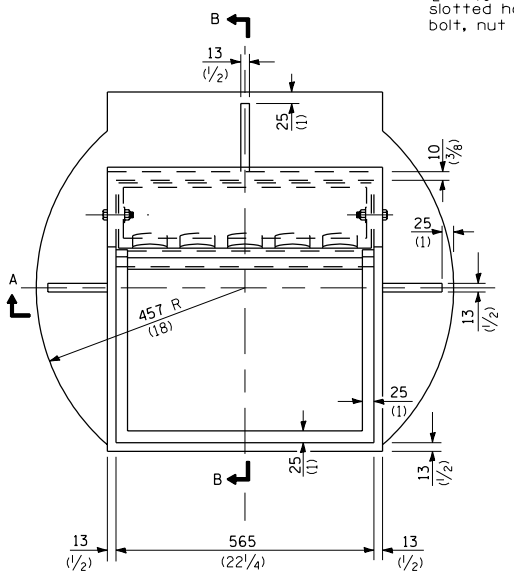

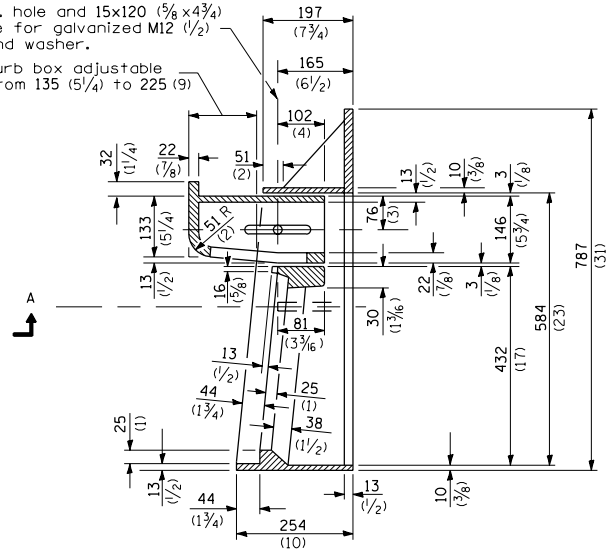

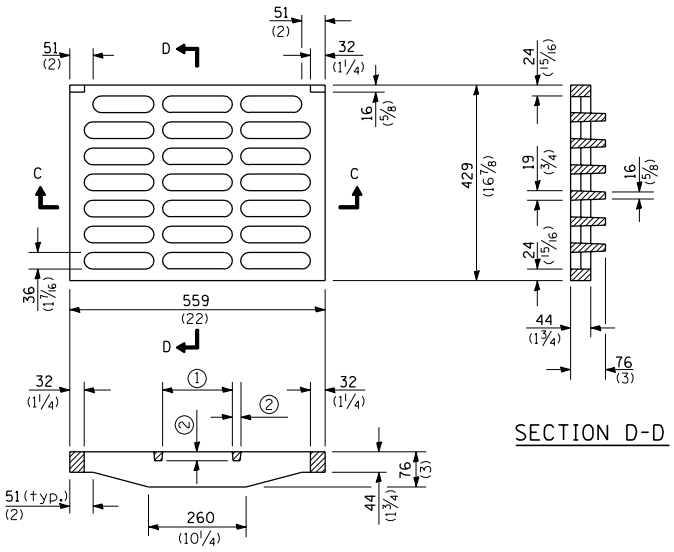

SECTION B-B

SECTION C-C

① = 152 (6) typ.

② = 19 (3/4) typ.

CAST GRATE

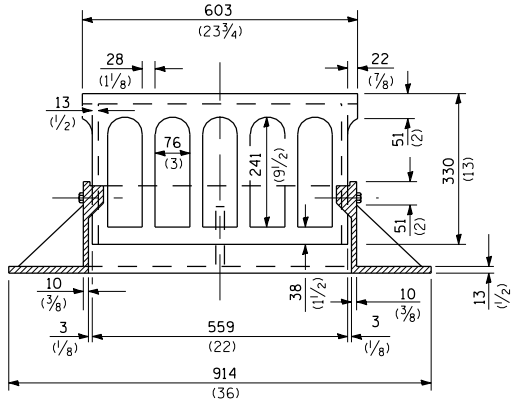

SECTION A-A

CAST FRAME

All dimensions are in millimeters (inches) unless otherwise shown.

Illinois Department of Transportation

PASSED January 1, 2004

ENGINEER OF POLICY AND PROCEDURES

APPROVED January 1, 2004

ENGINEER OF DESIGN AND ENVIRONMENT

ISSUED 1-1-97

DATE	REVISIONS
1-1-04	Revised frame and
	removed weights.
1-1-02	Added support bar to
	frame & revised frame
	& grate.

FRAME AND GRATE TYPE 3

STANDARD 604006-02