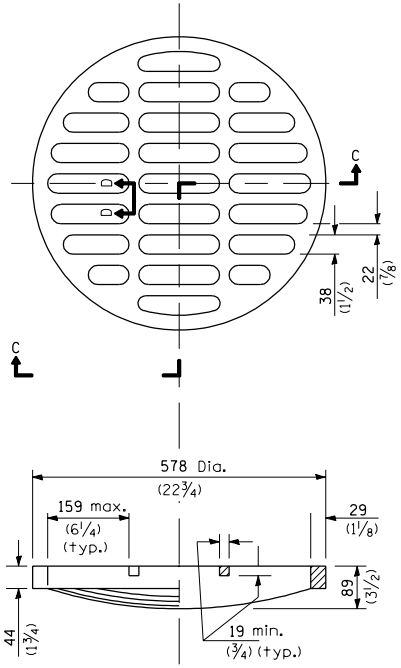

SECTION C-C

CAST OPEN LID

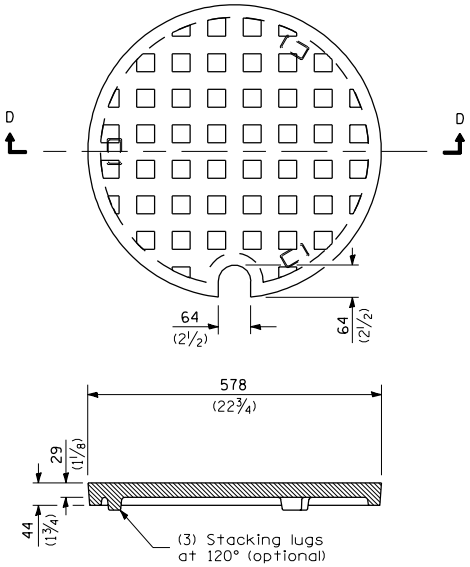

SECTION D-D

CAST CLOSED LID

Gray Iron Lid

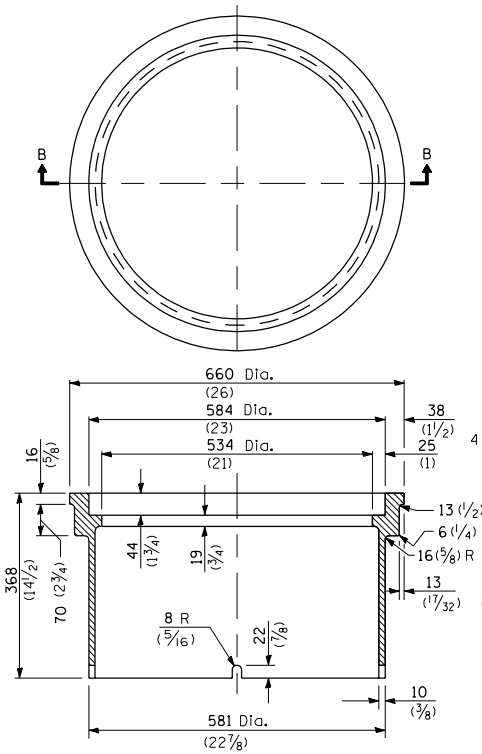

SECTION B-B

CAST FRAME

GRAY IRON

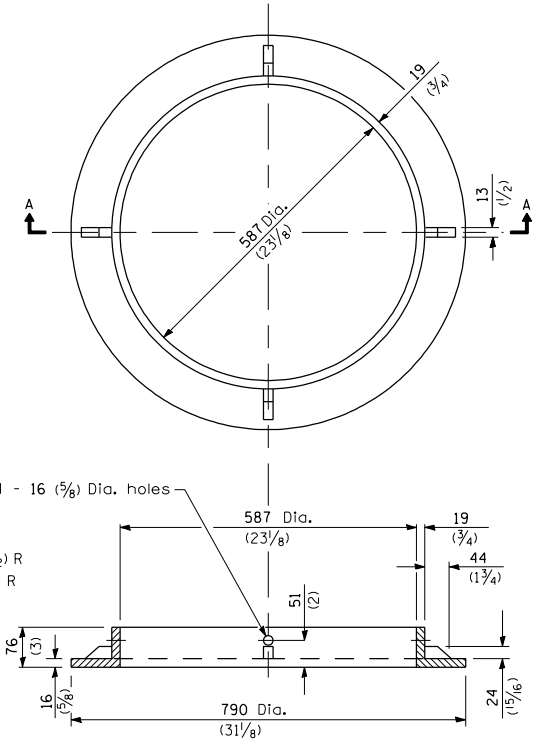

SECTION A-A

CAST BASE

GRAY IRON

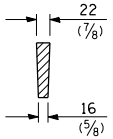

SECTION D-D

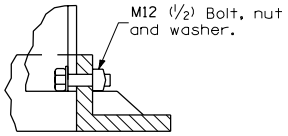

DETAIL OF BOLTING

FRAME TO BASE

NOTE: Bolts to be removed after pavement has been placed.

GENERAL NOTES

The four holes in the cast base may be rotated 45° from the position shown in section A-A

All dimensions are in millimeters (inches) unless otherwise shown.

DATE	REVISIONS
1-1-04	Removed weights.
1-1-97	Renum. Standard 2226-5.
	Revised Cast Closed Lid.

BASE, FRAME AND LIDS TYPE 5

STANDARD 604021-01

Illinois Department of Transportation

PASSED January 1, 2004

Michael Briand

ENGINEER OF POLICY AND PROCEDURES

APPROVED January 1, 2004

Michael L. Hine

ENGINEER OF DESIGN AND ENVIRONMENT

ISSUED 1-1-97