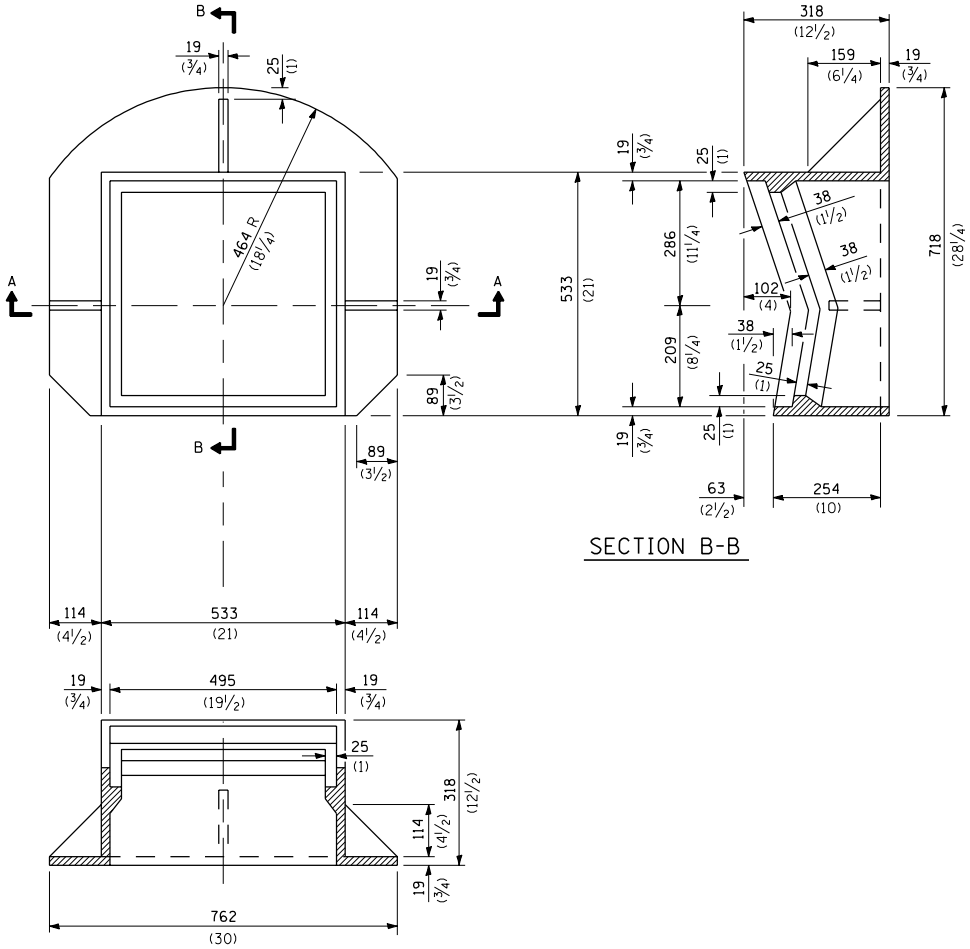

SECTION B-B

SECTION A-A

CAST FRAME

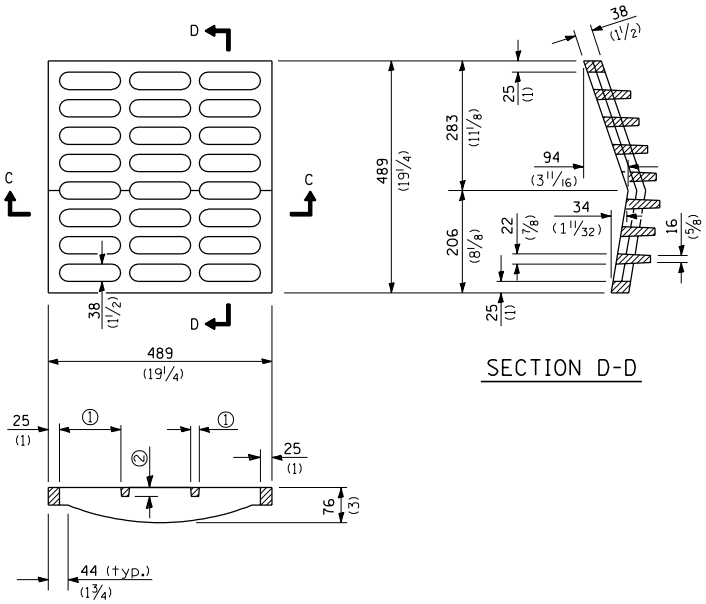

SECTION C-C

① = 159 (6 1/4) max. (typ.)
② = 19 (3/4) min. (typ.)

SECTION D-D

CAST GRATE

All dimensions are in millimeters (inches) unless otherwise shown.

Illinois Department of Transportation

PASSED January 1, 2004
ENGINEER OF POLICY AND PROCEDURES
APPROVED January 1, 2004
ENGINEER OF DESIGN AND ENVIRONMENT

ISSUED 1-1-97

DATE	REVISIONS
1-1-04	Removed weights.
1-1-97	Renum. Standard 2219-4.

FRAME AND GRATE
TYPE 10

STANDARD 604046-01