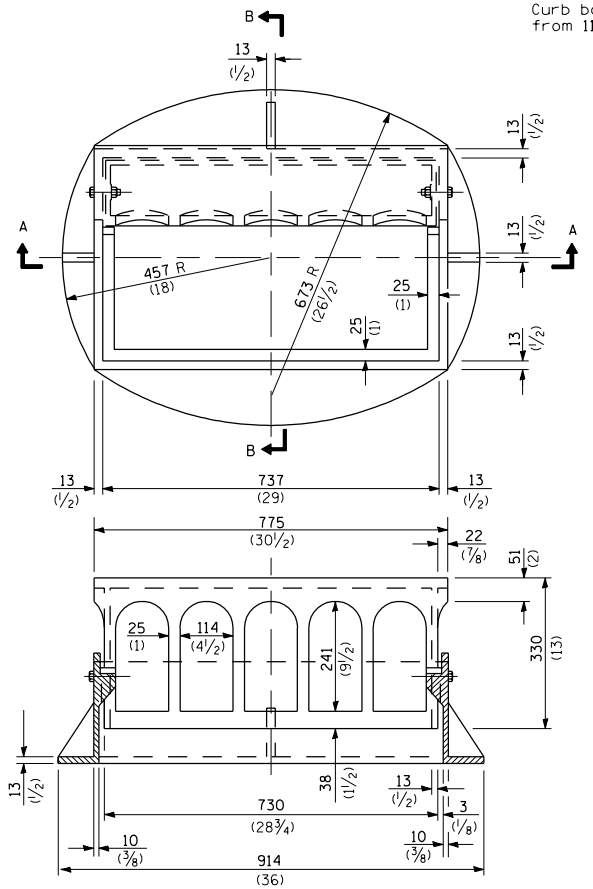

SECTION A-A

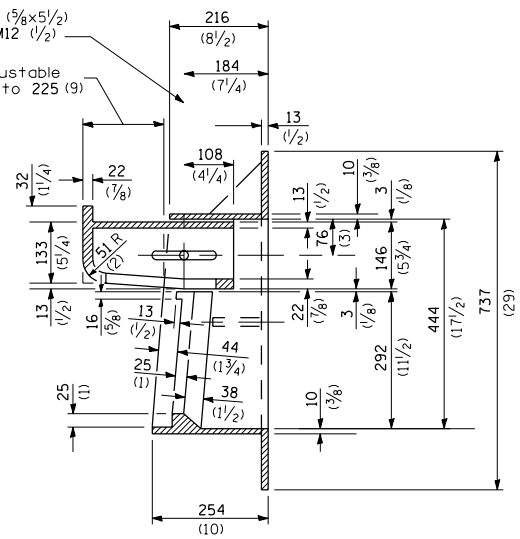

SECTION B-B

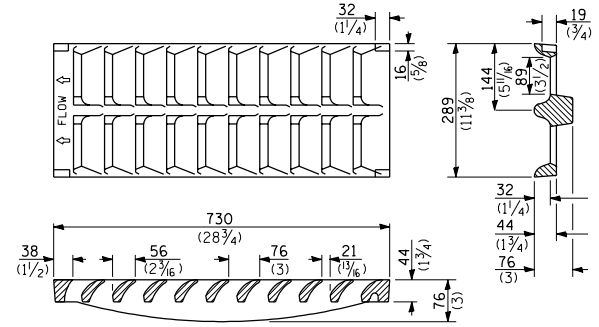

CAST GRATE

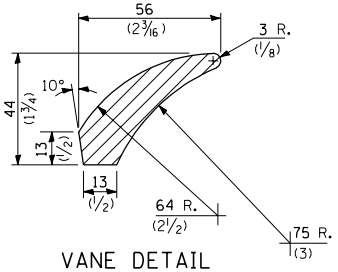

VANE DETAIL

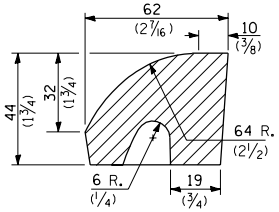

FRONT VANE DETAIL

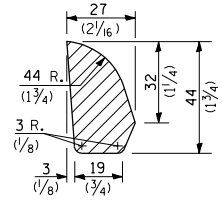

SIDE RIB DETAIL

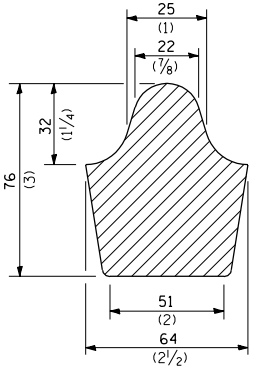

MIDDLE RIB DETAIL

CAST FRAME

All dimensions are in millimeters (inches) unless otherwise shown.

Illinois Department of Transportation

PASSED January 1, 2004
ENGINEER OF POLICY AND PROCEDURES
APPROVED January 1, 2004
ENGINEER OF DESIGN AND ENVIRONMENT

ISSUED 1-1-97

DATE	REVISIONS
1-1-04	Revised frame and
	removed weights.
1-1-97	Renum. Standard 2451.
	Deleted DN Symbol.

FRAME AND GRATE TYPE 11V

STANDARD 604056-01