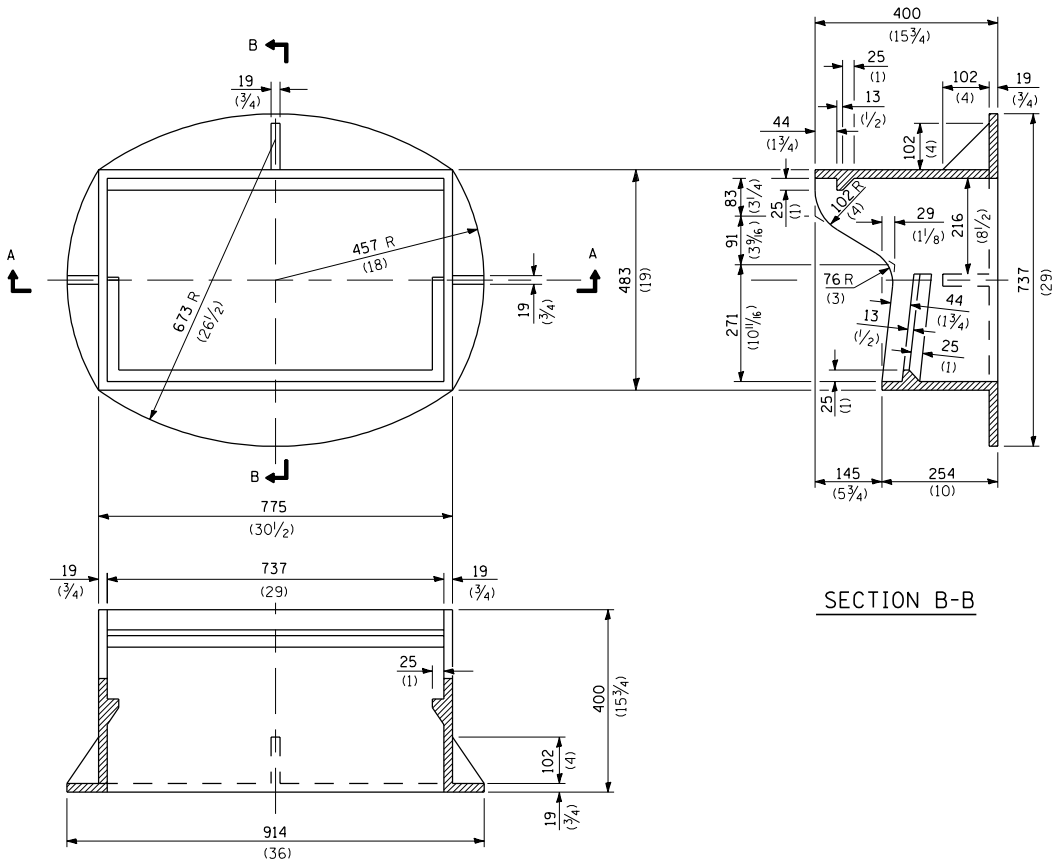

SECTION A-A

SECTION B-B

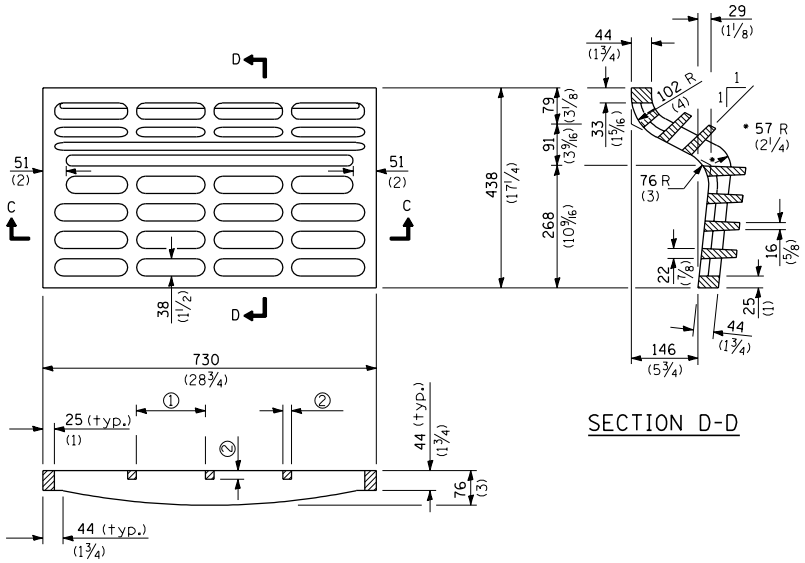

SECTION C-C

① = 159 (6 1/4) max. (typ.)

② = 19 (3/4) min. (typ.)

SECTION D-D

CAST GRATE

CAST FRAME

All dimensions are in millimeters (inches) unless otherwise shown.

Illinois Department of Transportation

PASSED January 1, 2004

Michael Brand
ENGINEER OF POLICY AND PROCEDURES

APPROVED January 1, 2004

Michael L. Hine
ENGINEER OF DESIGN AND ENVIRONMENT

ISSUED 1-1-97

DATE	REVISIONS
1-1-04	Removed weights.
1-1-97	Renum. Standard 2221-7.

FRAME AND GRATE TYPE 12

STANDARD 604061-01