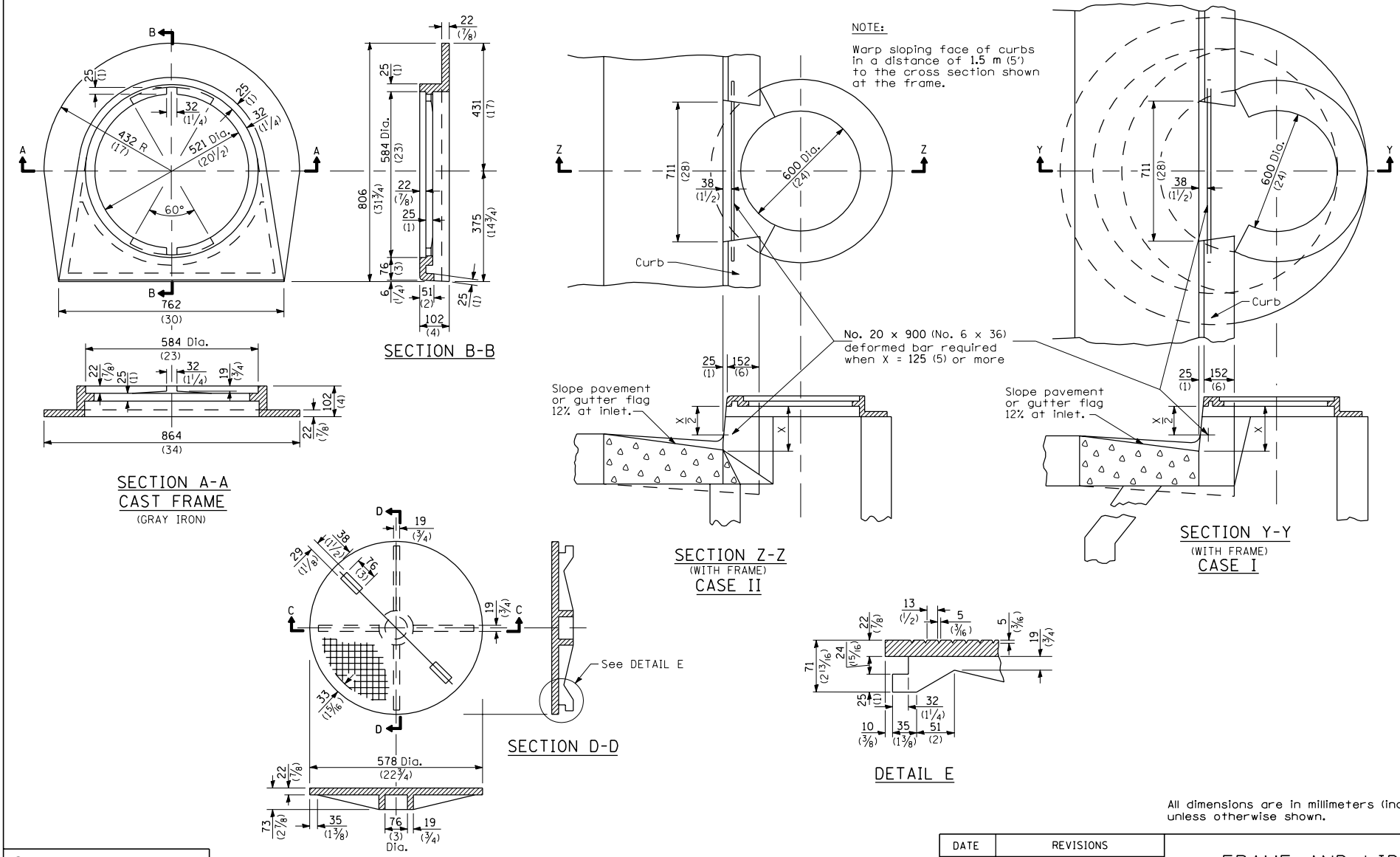

All dimensions are in millimeters (inches) unless otherwise shown.

Illinois Department of Transportation

PASSED January 1, 2004
ENGINEER OF POLICY AND PROCEDURES

APPROVED January 1, 2004
ENGINEER OF DESIGN AND ENVIRONMENT

ISSUED 1-1-97

DATE	REVISIONS
1-1-04	Removed weights.
1-1-97	Renum. Standard 2222-4.

FRAME AND LID TYPE 15

STANDARD 604066-01