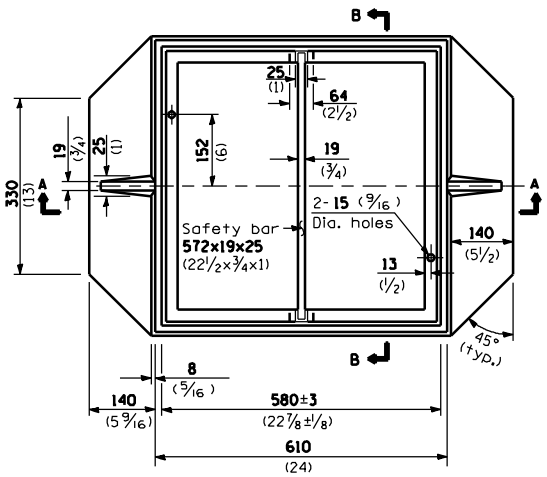

TOP VIEW

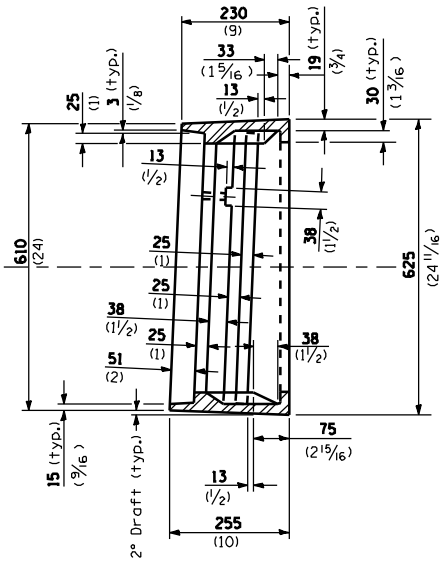

SECTION B-B

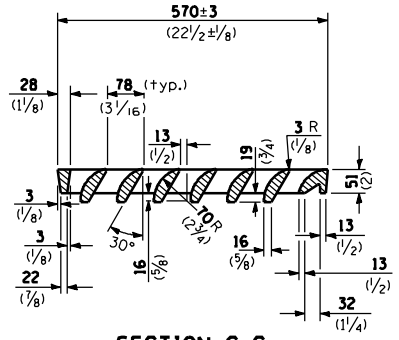

SECTION C-C

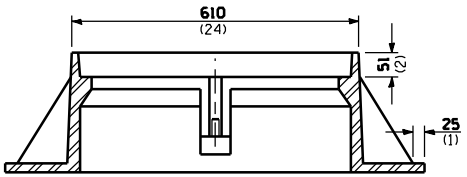

SECTION A-A

CAST FRAME
123 kg (272 lbs.)

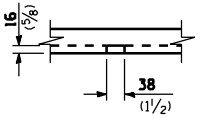

SECTION D-D

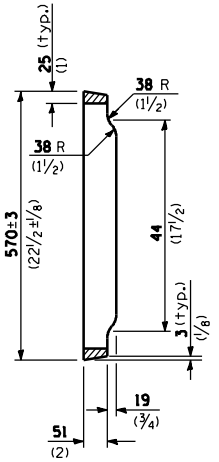

SECTION E-E

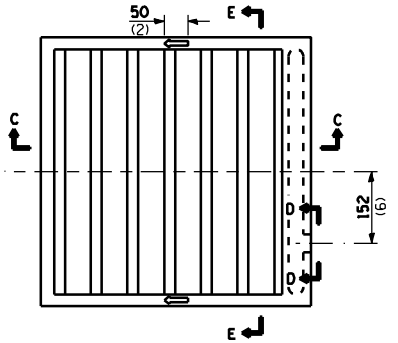

CAST GRATE
56.7 kg (125 lbs.)

All dimensions are in millimeters (inches) unless otherwise shown.

Illinois Department of Transportation

PASSED January 1, 1998
ENGINEER OF POLICY AND PROCEDURES
APPROVED January 1, 1998
ENGINEER OF DESIGN AND ENVIRONMENT

ISSUED 1-1-97

DATE	REVISIONS
1-1-98	Revised grate weight.
1-1-97	Renum. Standard 2385-1.
	Deleted DN Symbol.

FRAME AND GRATE TYPE 20

STANDARD 604071-01