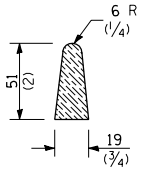

DETAIL A

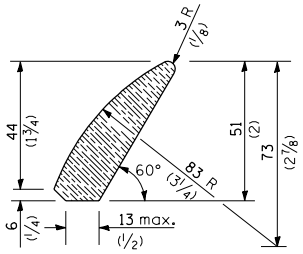

DETAIL B

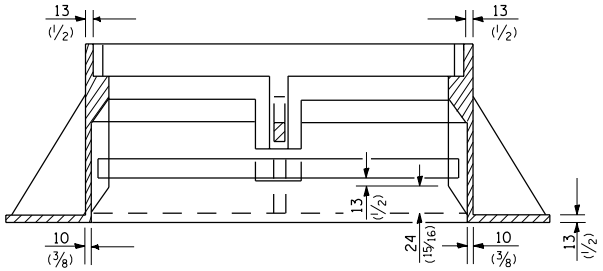

SECTION D-D

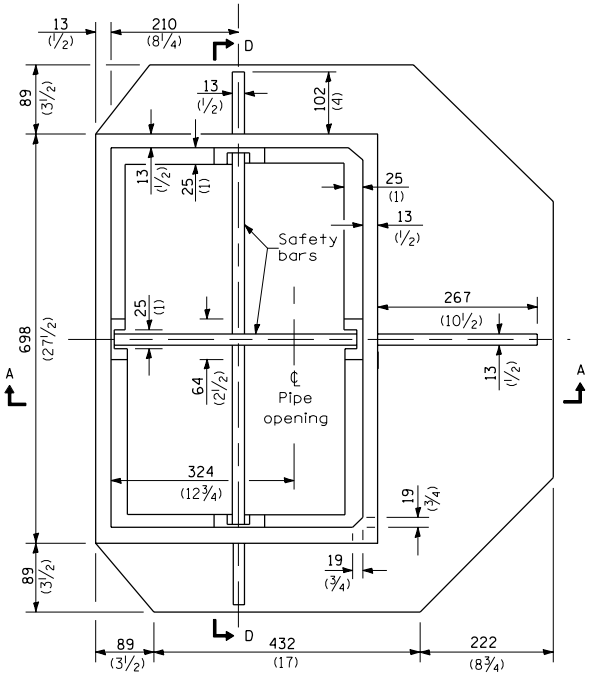

PLAN - FRAME

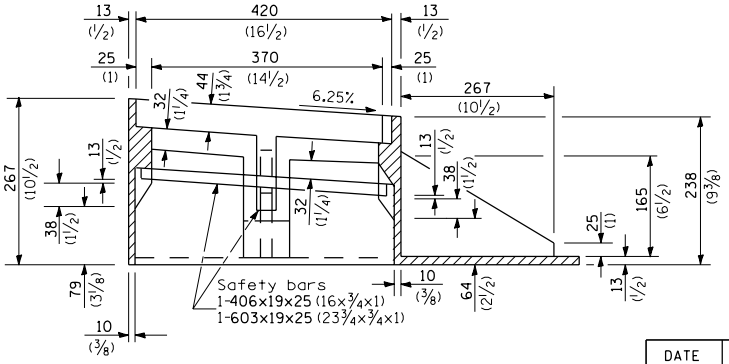

SECTION A-A

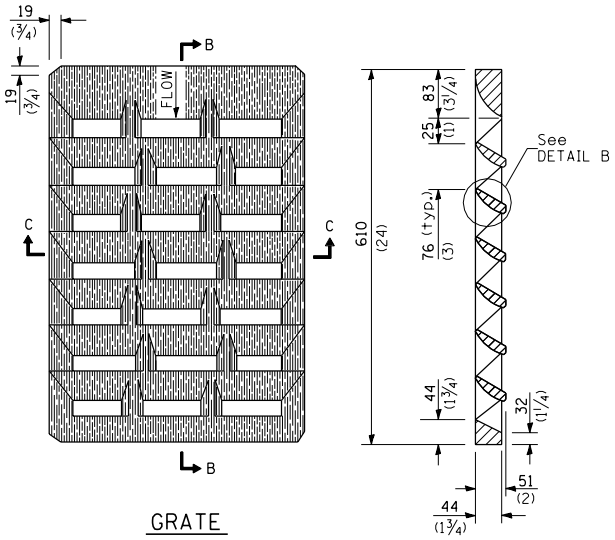

GRATE

SECTION B-B

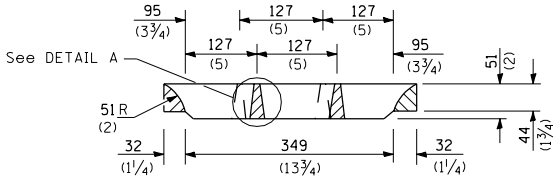

SECTION C-C

All dimensions are in millimeters (inches) unless otherwise shown.

Illinois Department of Transportation

PASSED January 1, 2004
ENGINEER OF POLICY AND PROCEDURES

APPROVED January 1, 2004
ENGINEER OF DESIGN AND ENVIRONMENT

ISSUED 1-1-97

DATE	REVISIONS
1-1-04	Revised frame and
	removed weights.
1-1-97	Renum. Standard 2423-1.

FRAME AND GRATE
TYPE 23

STANDARD 604086-01