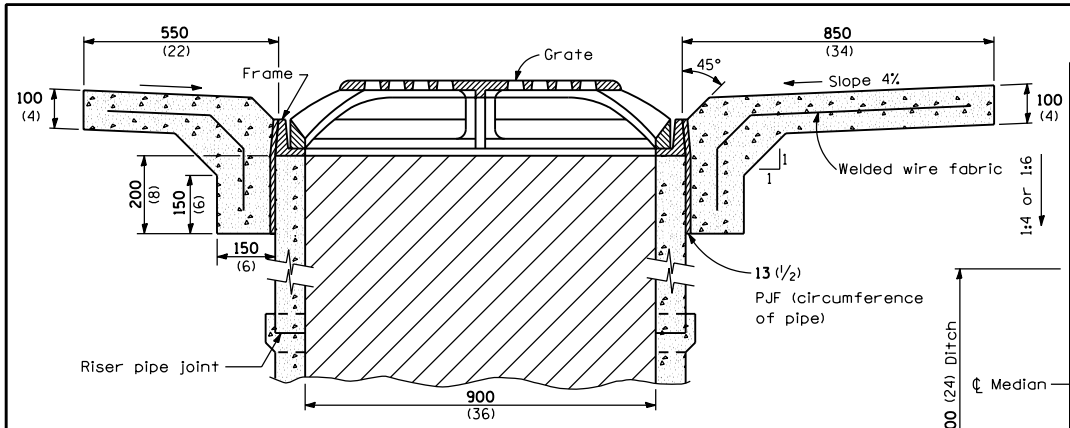

SECTION B-B

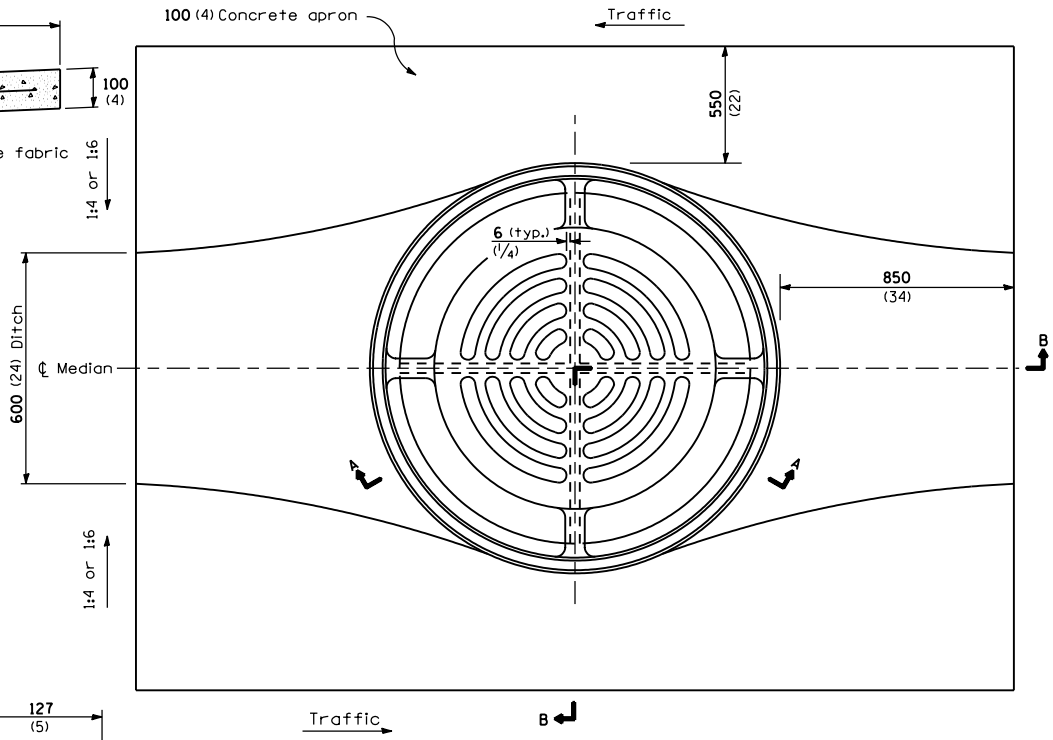

LOCATION SKETCH - PLAN

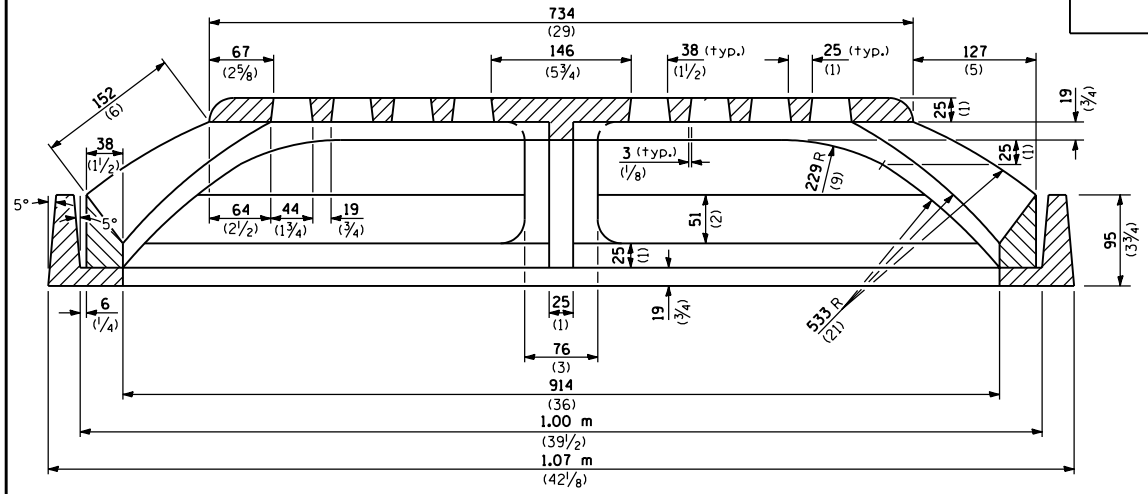

SECTION A-A

GENERAL NOTES

All slope ratios are expressed as units of vertical displacement to units of horizontal displacement (V:H).

All dimensions are in millimeters (inches) unless otherwise shown.

Illinois Department of Transportation

PASSED January 1, 1997
ENGINEER OF POLICY AND PROCEDURES

APPROVED January 1, 1997
ENGINEER OF DESIGN AND ENVIRONMENT

ISSUED 1-1-97

DATE	REVISIONS
1-1-97	Renum. Standard 2251-2.
6-15-94	Moved G.N. to Specs.
	Totally Revised.
	Added Metric.

MEDIAN INLET for 900 mm (36") REINFORCED CONCRETE PIPE

STANDARD 604106