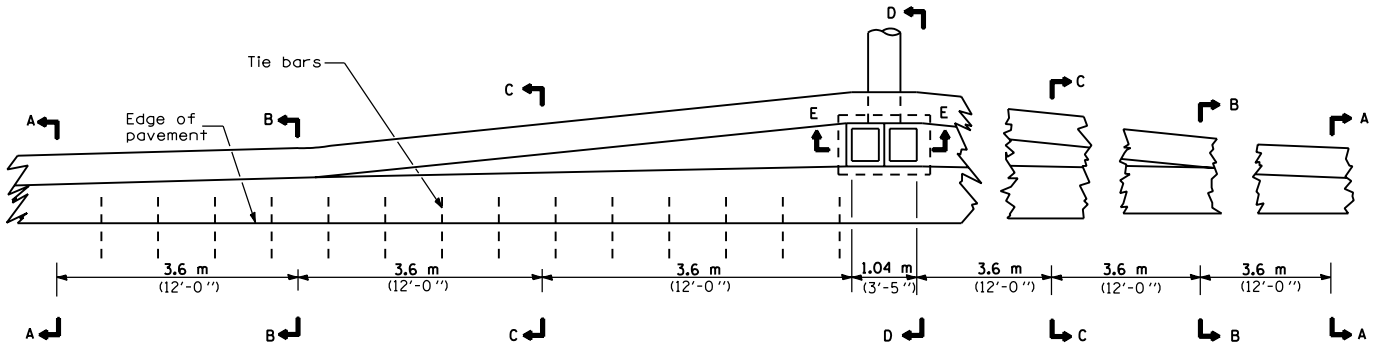

PLAN-DOUBLE OUTLET

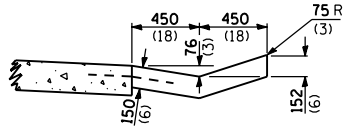

SECTION A-A

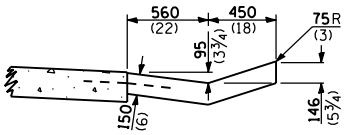

SECTION B-B

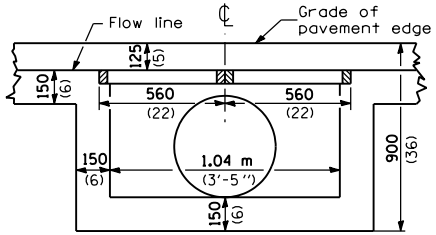

SECTION E-E

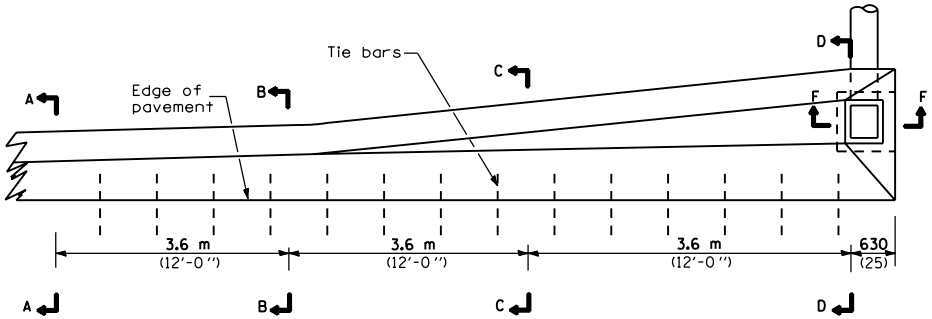

PLAN-SINGLE OUTLET

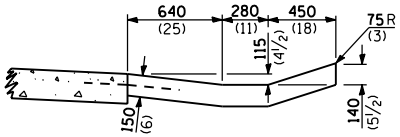

SECTION C-C

QUANTITIES

Material	Single	Double
Concrete - m^3 (cu.yd.)	2.5 (3.3)	5 (6.5)
Cast Iron Grate - Ea. 57 kg (125 lbs.)	1	2
Pipe Drain - Dia. mm (in.)	375 (15)	450 (18)

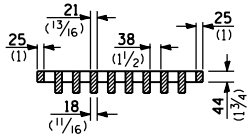

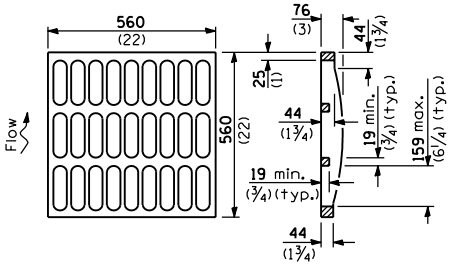

GRATE TYPE A

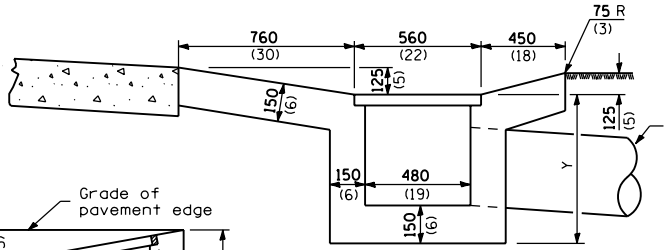

Single - Y = 635 (25)
Double - Y = 775 (31)

SECTION D-D

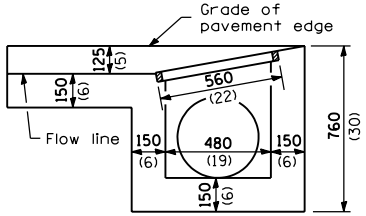

SECTION F-F

GENERAL NOTES

The gutter outlet shall be tied to the pavement in accordance with details for longitudinal construction joint shown on Standard 420001.

Tie bars shall be No. 20 (No. 6) at 600 mm (24") centers unless otherwise shown.

If the average grade of pavement for the distance A-D exceeds 2%, this distance shall be increased 1.8 m (6') for each 1% increase in grade.

All dimensions are in millimeters (inches) unless otherwise shown.

Illinois Department of Transportation

PASSED January 1, 2000
ENGINEER OF POLICY AND PROCEDURES
APPROVED January 1, 2000
ENGINEER OF DESIGN AND ENVIRONMENT

ISSUED 1-1-97

DATE	REVISIONS
1-1-2000	Changed 400 to 375
	in Quantities Table
1-1-99	In sec. DD; changed
	dim. from 785 to 775.

OUTLET TYPE 1 FOR TYPE A GUTTER

STANDARD 606106-02