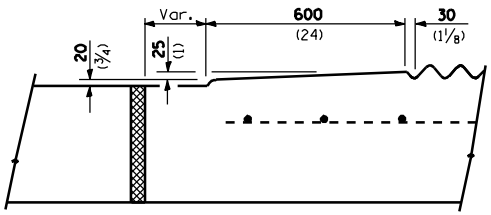

SECTION A-A

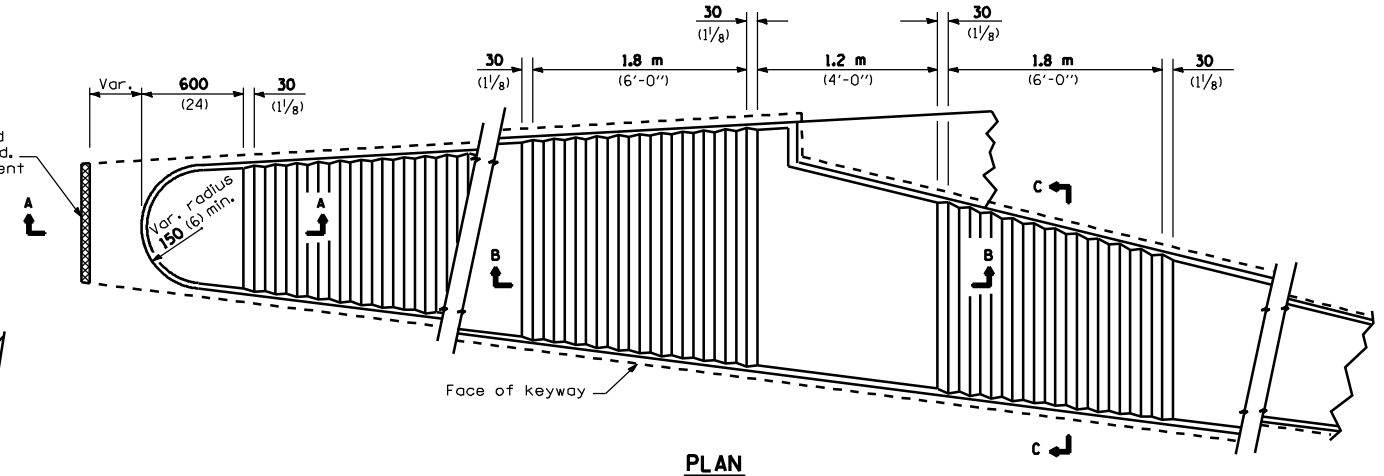

PLAN

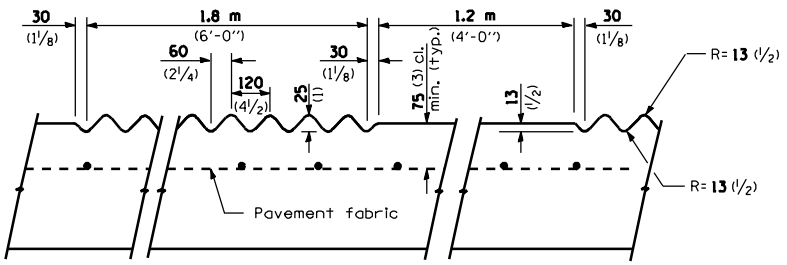

SECTION B-B

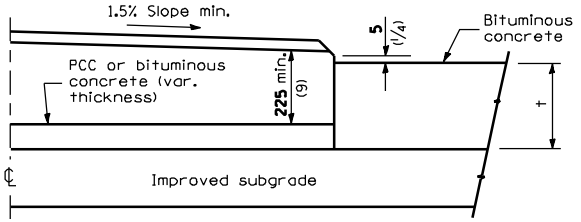

HALF SECTION FOR FLEXIBLE PAVEMENT
SECTION C-C

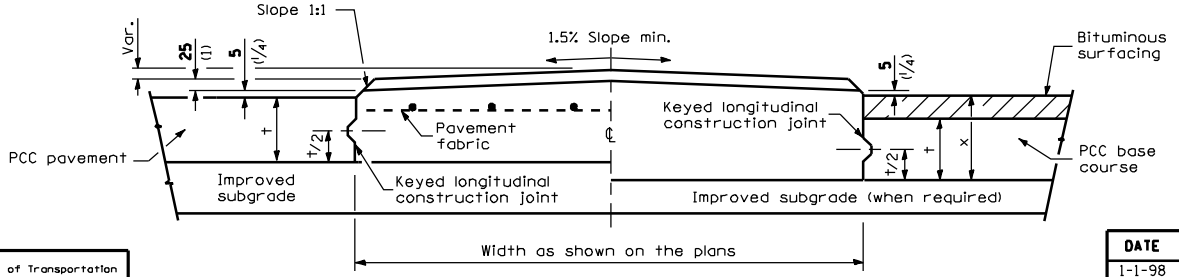

HALF SECTION FOR PCC PAVEMENT

SECTION C-C

HALF SECTION FOR PCC BASE COURSE

GENERAL NOTES

PEJF = Preformed expansion joint filler.

Median layout and radii shall be as shown on the plans.

Keyed longitudinal construction joints shall be constructed without tie bars.

X = PCC base course plus bituminous thickness.

t = Pavement or pcc base course thickness.

Fabric required for medians built contiguous to reinforced pcc pavement only.

See Standards 420001 and 420701 for details not shown.

All dimensions are in millimeters (inches) unless otherwise shown.

Illinois Department of Transportation

PASSED January 1, 1998
ENGINEER OF POLICY AND PROCEDURES
APPROVED January 1, 1998
ENGINEER OF DESIGN AND ENVIRONMENT

ISSUED 1-1-97

DATE	REVISIONS
1-1-98	Added "(when required)"
	to half section for
	PCC BASE.
1-1-97	Renum. Standard 2122-17.

CORRUGATED PC CONCRETE MEDIANS

STANDARD 606306-01