* Type B, C, or D inlet box as required.

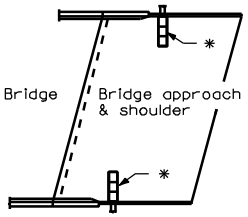

GENERAL PLAN

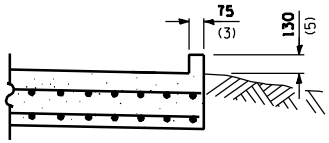

SECTION C-C

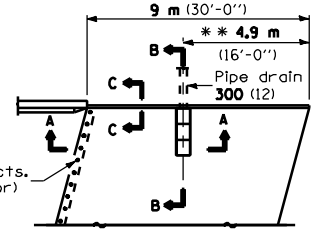

** Vary this dimension as needed to position the Inlet Box and Pipe Drain between the proposed approach guardrail posts.

TYPICAL DETAIL PLAN

(W/O Wingwall)

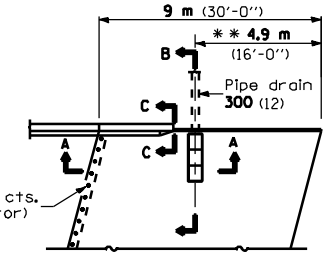

TYPICAL DETAIL PLAN

(With Wingwall)

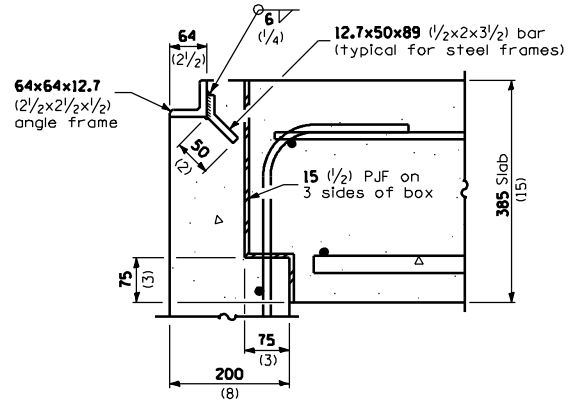

DETAIL A

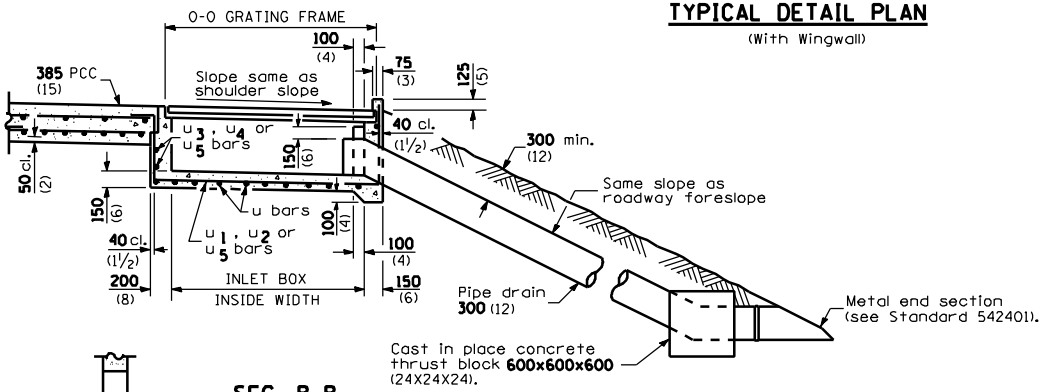

SEC. B-B

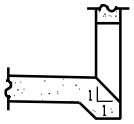

BOX OUTLET WHEN PRECAST

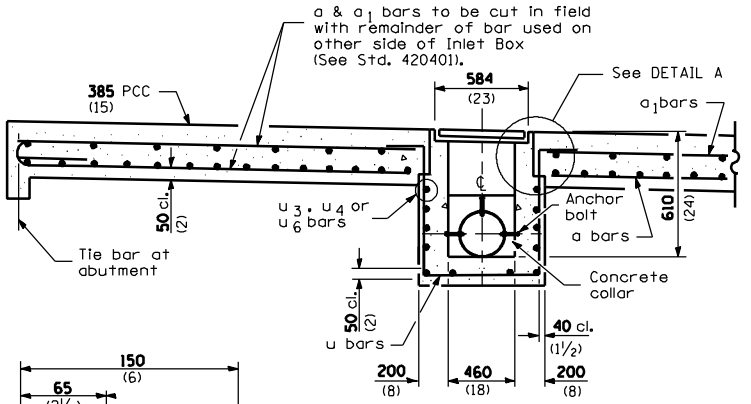

SECTION A-A

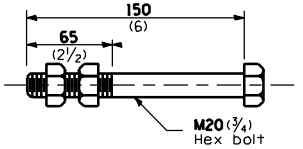

ANCHOR BOLT

(Used to tie pipe to concrete collar)

INLET TYPE	SHOULDER WIDTH	O-O GRATING FRAME	INLET BOX INSIDE WIDTH	INLET BOX INSIDE LENGTH
Type B	Less than **1.5 m** (5')	**0.690 m** (2'-3")	**0.560 m** (1'-10")	**460** (18)
Type C	**1.5 - 1.8 m** (5') (6')	**1.325 m** (4'-4")	**1.195 m** (3'-11")	**460** (18)
Type D	Greater than **1.8 m** (6')	**1.960 m** (6'-5")	**1.830 m** (6'-0")	**460** (18)

GENERAL NOTES

All exposed edges of the inlet, except the upper perimeter, shall be beveled 20 mm (3/4 inch).

All dimensions are in millimeters (inches) unless otherwise shown.

Illinois Department of Transportation

PASSED January 1, 1998
ENGINEER OF POLICY AND PROCEDURES
APPROVED January 1, 1998
ENGINEER OF DESIGN AND ENVIRONMENT

ISSUED 1-1-97

DATE	REVISIONS
1-1-98	Rev. ref. to "542101"
	to read "542401".
1-1-97	Renum. Standard 2443-3.

BRIDGE APPROACH PAVEMENT (DRAIN DETAIL)

(Sheet 1 of 2)

STANDARD 609006-01

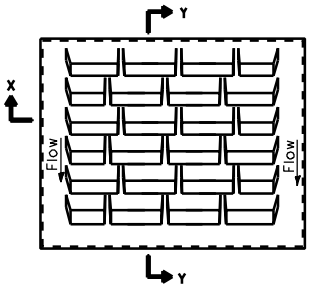

DETAIL OF CAST GRATE

Type B requires 1 grate
Type C requires 2 grates
Type D requires 3 grates

SECTION Y-Y

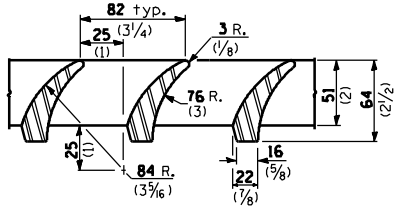

DETAIL B

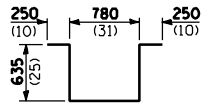

BAR u

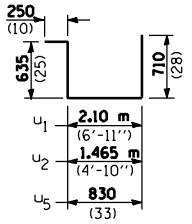

BARS u_1, u_2 & u_5

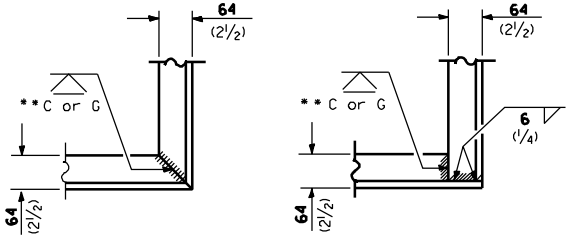

ALT. 1 ALT. 2

TYPICAL CORNER of STEEL GRATING FRAME

**Cut or Grind flush

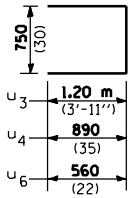

Bars u_3, u_4 & u_6

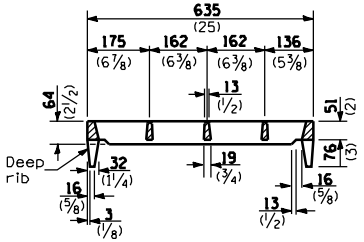

SECTION X-X

(Deep rib shall be omitted for end(s) resting on frame perimeter)

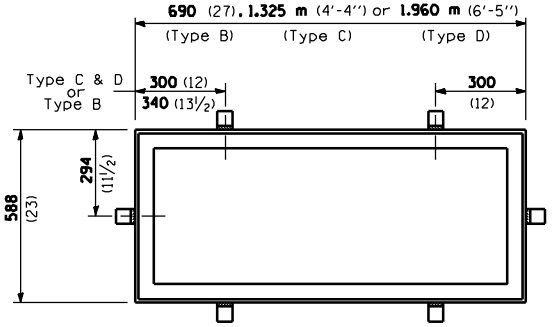

DETAIL OF STEEL FRAME

Cast frame to have same basic dimensions.

INLET BOX

REQUIRED MATERIAL

TYPE B

Bar	Qty.	Size	Length
u	4	No. 15 (No.4)	2.550 m (8'-5")
u_5	3	No. 15 (No.4)	2.425 m (8'-0")
u_6	4	No. 15 (No.4)	1.870 m (6'-2")
Concrete		m^3 (cu. yds.)	0.4 (0.5)
Reinf. bars		kg (lbs.)	39.2 (55.0)
Grating		m^2 (sq. ft.)	0.34 (3.6)

TYPE C

Bar	Qty.	Size	Length
u	6	No. 15 (No.4)	2.550 m (8'-5")
u_2	3	No. 15 (No.4)	3.060 m (10'-1")
u_4	4	No. 15 (No.4)	2.530 m (8'-4")
Concrete		m^3 (cu. yds.)	0.6 (0.8)
Reinf. bars		kg (lbs.)	54.3 (76)
Grating		m^2 (sq. ft.)	0.68 (7.3)

TYPE D

Bar	Qty.	Size	Length
u	8	No. 15 (No.4)	2.550 m (8'-5")
u_1	3	No. 15 (No.4)	3.695 m (12'-2")
u_3	4	No. 15 (No.4)	3.150 m (10'-4")
Concrete		m^3 (cu. yds.)	0.8 (1.1)
Reinf. bars		kg (lbs.)	69.2 (97.0)
Grating		m^2 (sq. ft.)	1.02 (10.9)

All dimensions are in millimeters (inches) unless otherwise shown.

Illinois Department of Transportation

PASSED January 1, 1998
ENGINEER OF POLICY AND PROCEDURES
APPROVED January 1, 1998
ENGINEER OF DESIGN AND ENVIRONMENT

ISSUED 1-1-97

BRIDGE APPROACH PAVEMENT (DRAIN DETAIL)

(Sheet 2 of 2)

STANDARD 609006-01