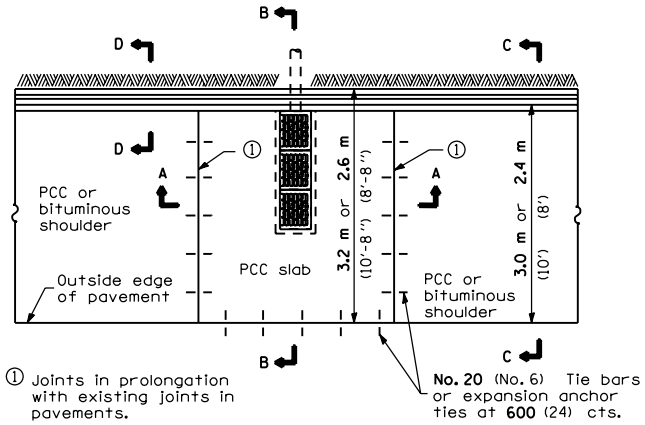

PLAN

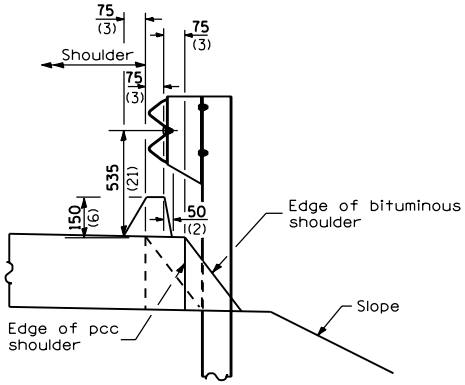

DETAIL B

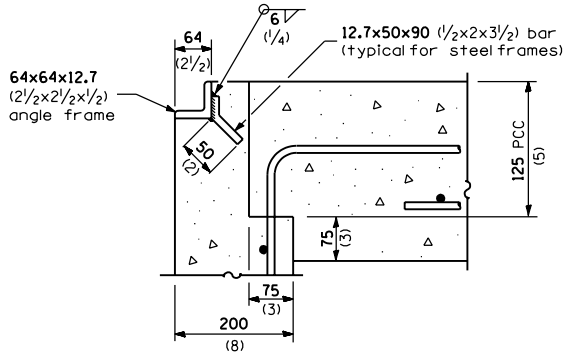

DETAIL A

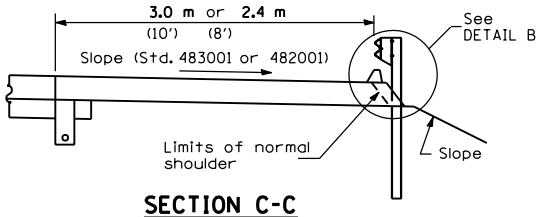

SECTION C-C

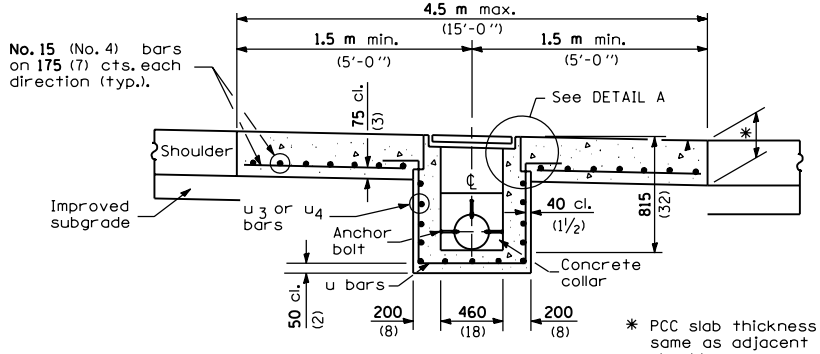

SEC. A-A

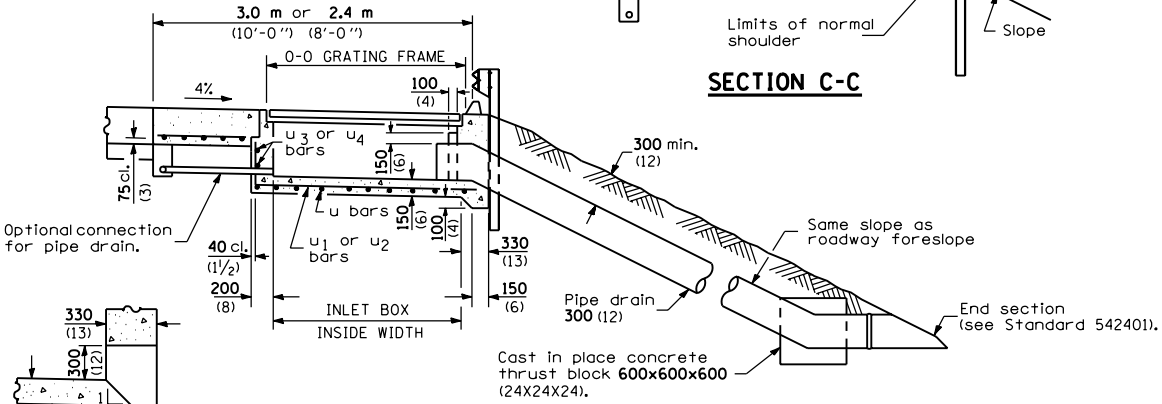

SEC. B-B

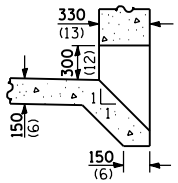

BOX OUTLET WHEN PRECAST

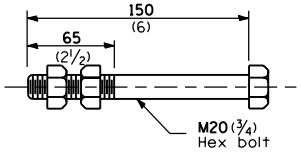

ANCHOR BOLT

(Used to tie pipe to concrete collar)

GENERAL NOTES

See Standard 420001 for joint details not shown.

All exposed edges of the inlet, except the upper perimeter, shall be beveled 20 mm (¾").

For placement of drainage elements on existing construction with existing rigid pavement, substitute expansion anchor ties for tie bars. For nonrigid pavements or monolithic construction of pcc slab and shoulder, omit tie bars.

All dimensions are in millimeters (inches) unless otherwise shown.

INLET TYPE	SHOULDER WIDTH	O-O GRATING FRAME	INLET BOX INSIDE WIDTH	INLET BOX INSIDE LENGTH
Type E	2.4 m (8')	1.325 m (4'-4")	1.195 m (3'-11")	460 (18)
Type F	3.0 m (10')	1.960 m (6'-5")	1.830 m (6'-0")	460 (18)

DATE	REVISIONS
1-1-02	Deleted "Metal" from
	Section B-B.
1-1-98	Rev. ref. to "542101"
	to read "542401".

SHOULDER INLET WITH CURB

(Sheet 1 of 2)

STANDARD 610001-02

Illinois Department of Transportation

PASSED January 1, 2002
Roger Driskell
ENGINEER OF POLICY AND PROCEDURES

APPROVED January 1, 2002
Michael J. Hine
ENGINEER OF DESIGN AND ENVIRONMENT

ISSUED 1-1-97

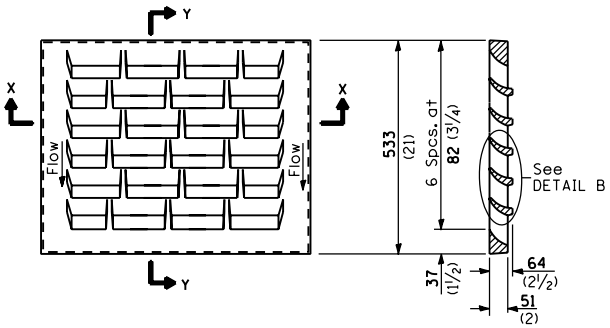

DETAIL OF CAST GRATE

Type E requires 2 grates
Type F requires 3 grates

SECTION Y-Y

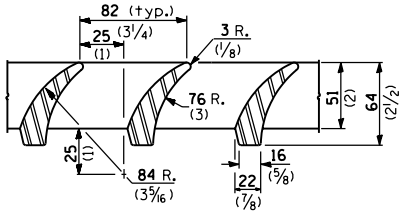

DETAIL B

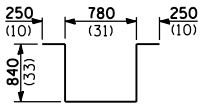

BAR u

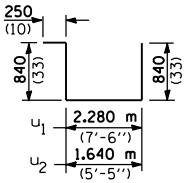

BARS u_1, u_2

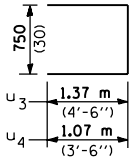

Bars u_3, u_4

INLET BOX

REQUIRED MATERIAL			
TYPE F			
Bar	Qty.	Size	Length
u	8	No. 15 (No. 4)	2.96 m (9'-9")
u_1	3	No. 15 (No. 4)	4.21 m (13'-10")
u_3	6	No. 15 (No. 4)	3.49 m (11'-6")
Concrete		m^3 (cu. yds.)	1.3 (1.7)
Reinf. bars		kg (lbs.)	89.9 (126)
Grating		m^2 (sq. ft.)	1.02 (10.9)
TYPE E			
Bar	Qty.	Size	Length
u	6	No. 15 (No. 4)	2.96 m (9'-9")
u_2	3	No. 15 (No. 4)	3.57 m (11'-9")
u_4	6	No. 15 (No. 4)	2.89 m (9'-6")
Concrete		m^3 (cu. yds.)	1.0 (1.3)
Reinf. bars		kg (lbs.)	71.9 (101)
Grating		m^2 (sq. ft.)	0.68 (7.3)

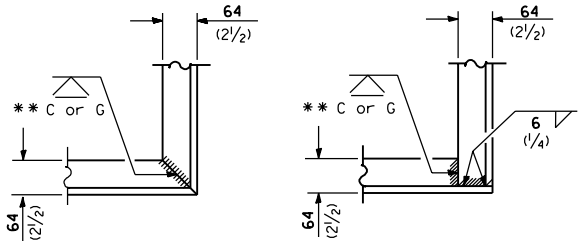

ALT. 1

ALT. 2

TYPICAL CORNER of STEEL GRATING FRAME

** Cut or Grind flush

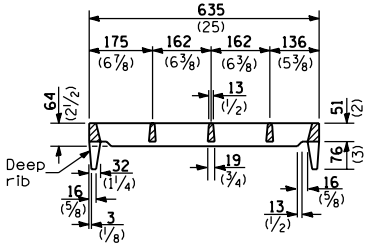

SECTION X-X

(Deep rib shall be omitted for end(s) resting on frame perimeter)

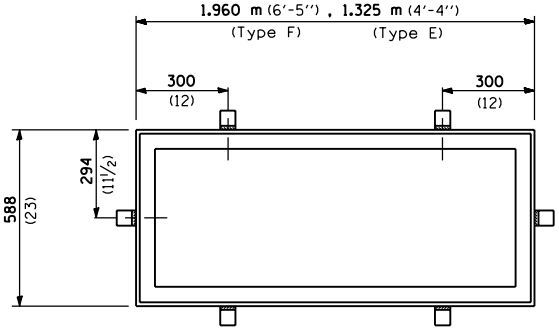

DETAIL OF STEEL FRAME

Cast frame to have same basic dimensions.

All dimensions are in millimeters (inches) unless otherwise shown.

SHOULDER INLET WITH CURB

(Sheet 2 of 2)

STANDARD 610001-02

Illinois Department of Transportation

PASSED January 1, 2002
ENGINEER OF POLICY AND PROCEDURES

APPROVED January 1, 2002
ENGINEER OF DESIGN AND ENVIRONMENT

ISSUED 1-1-97