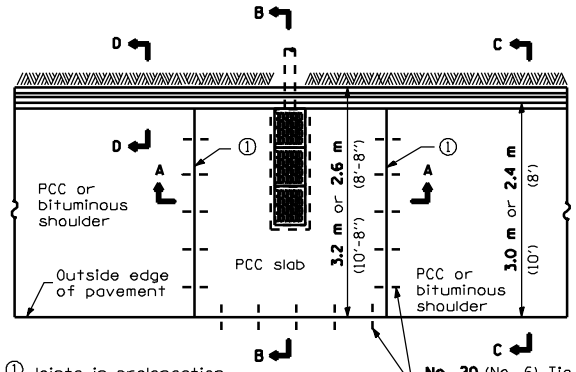

① Joints in prolongation with existing joints in pavements.

No. 20 (No. 6) Tie bars or expansion anchor ties at **600** (24) cts.

PLAN

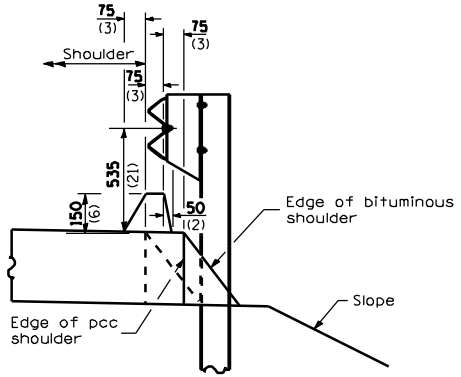

DETAIL B

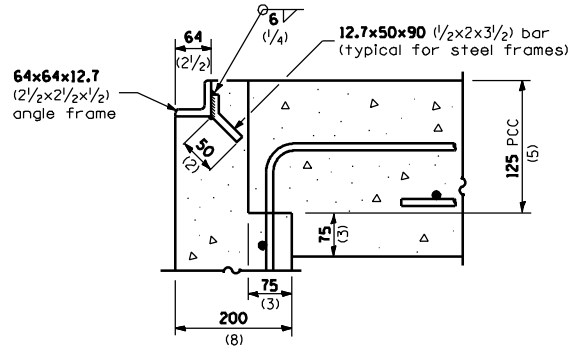

DETAIL A

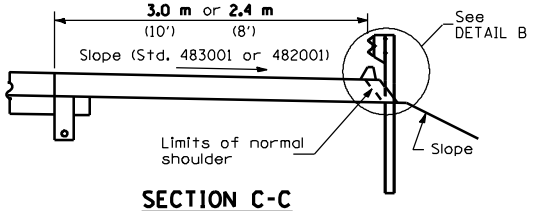

SECTION C-C

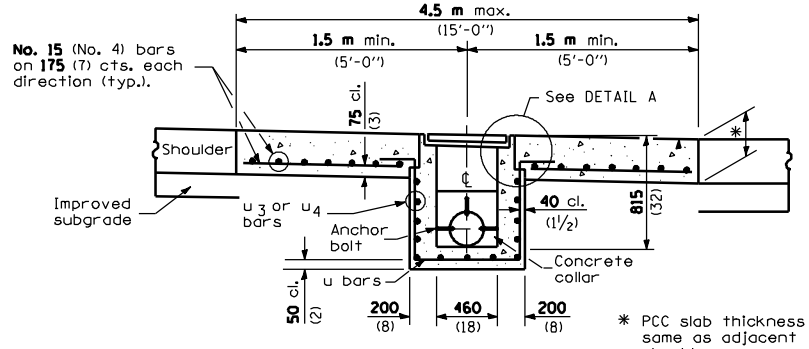

* PCC slab thickness same as adjacent shoulder.

SEC. A-A

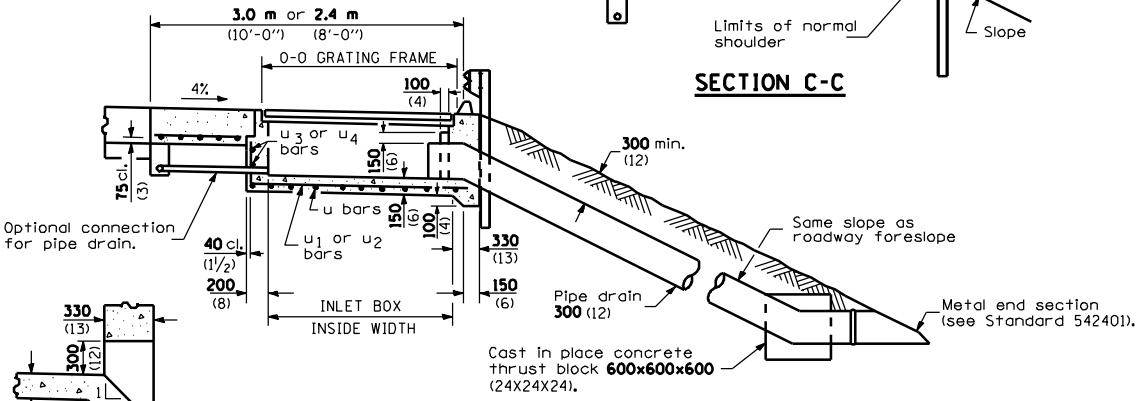

SEC. B-B

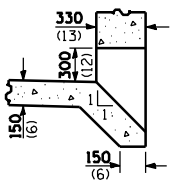

BOX OUTLET WHEN PRECAST

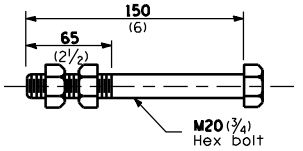

ANCHOR BOLT

(Used to tie pipe to concrete collar)

GENERAL NOTES

See Standard 420001 for joint details not shown.

All exposed edges of the inlet, except the upper perimeter, shall be beveled 20 mm (3/4").

For placement of drainage elements on existing construction with existing rigid pavement, substitute expansion anchor ties for tie bars. For nonrigid pavements or monolithic construction of pcc slab and shoulder, omit tie bars.

All dimensions are in millimeters (inches) unless otherwise shown.

INLET TYPE	SHOULDER WIDTH	O-O GRATING FRAME	INLET BOX INSIDE WIDTH	INLET BOX INSIDE LENGTH
Type E	**2.4 m** (8')	**1.325 m** (4'-4")	**1.195 m** (3'-11")	**460** (18)
Type F	**3.0 m** (10')	**1.960 m** (6'-5")	**1.830 m** (6'-0")	**460** (18)

DATE	REVISIONS
1-1-98	Rev. ref. to "542101"
	to read "542401".
1-1-97	Renum. Standard 2322-6.

SHOULDER INLET WITH CURB

(Sheet 1 of 2)

STANDARD 610001-01

Illinois Department of Transportation

PASSED January 1, 1998
ENGINEER OF POLICY AND PROCEDURES

APPROVED January 1, 1998
ENGINEER OF DESIGN AND ENVIRONMENT

ISSUED 1-1-97

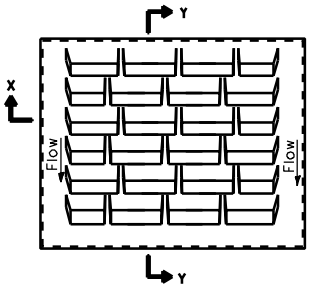

DETAIL OF CAST GRATE

Type E requires 2 grates
Type F requires 3 grates

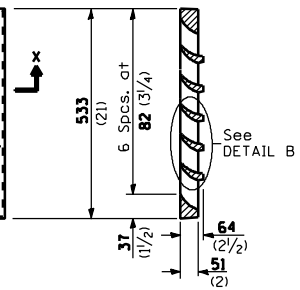

SECTION Y-Y

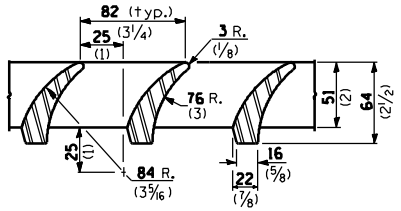

DETAIL B

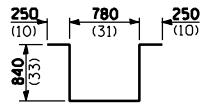

BAR u

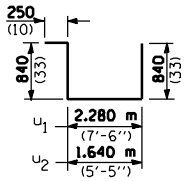

BARS u_1,u_2

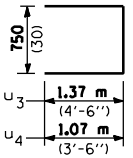

Bars u_3,u_4

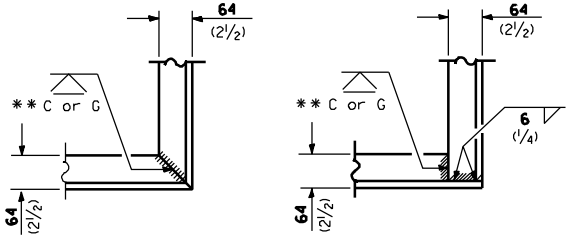

ALT. 1 ALT. 2

TYPICAL CORNER of STEEL GRATING FRAME

** Cut or Grind flush

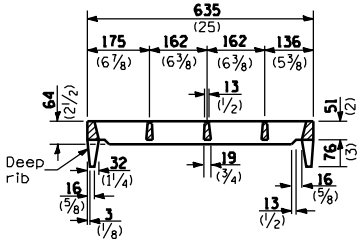

SECTION X-X

(Deep rib shall be omitted for end(s) resting on frame perimeter)

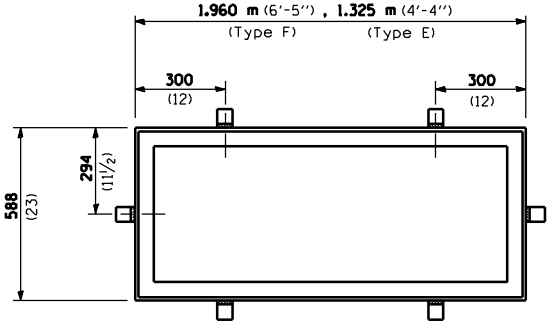

DETAIL OF STEEL FRAME

Cast frame to have same basic dimensions.

INLET BOX

REQUIRED MATERIAL			
TYPE F			
Bar	Qty.	Size	Length
u	8	**No. 15** (No. 4)	**2.96 m** (9'-9")
u_1	3	**No. 15** (No. 4)	**4.21 m** (13'-10")
u_3	6	**No. 15** (No. 4)	**3.49 m** (11'-6")
Concrete		**m^3** (cu. yds.)	**1.3** (1.7)
Reinf. bars		**kg** (lbs.)	**89.9** (126)
Grating		**m^2** (sq. ft.)	**1.02** (10.9)
TYPE E			
Bar	Qty.	Size	Length
u	6	**No. 15** (No. 4)	**2.96 m** (9'-9")
u_2	3	**No. 15** (No. 4)	**3.57 m** (11'-9")
u_4	6	**No. 15** (No. 4)	**2.89 m** (9'-6")
Concrete		**m^3** (cu. yds.)	**1.0** (1.3)
Reinf. bars		**kg** (lbs.)	**71.9** (101)
Grating		**m^2** (sq. ft.)	**0.68** (7.3)

All dimensions are in millimeters (inches) unless otherwise shown.

Illinois Department of Transportation

PASSED January 1, 1998
ENGINEER OF POLICY AND PROCEDURES
APPROVED January 1, 1998
ENGINEER OF DESIGN AND ENVIRONMENT

ISSUED 1-1-97

SHOULDER INLET WITH CURB

(Sheet 2 of 2)

STANDARD 610001-01