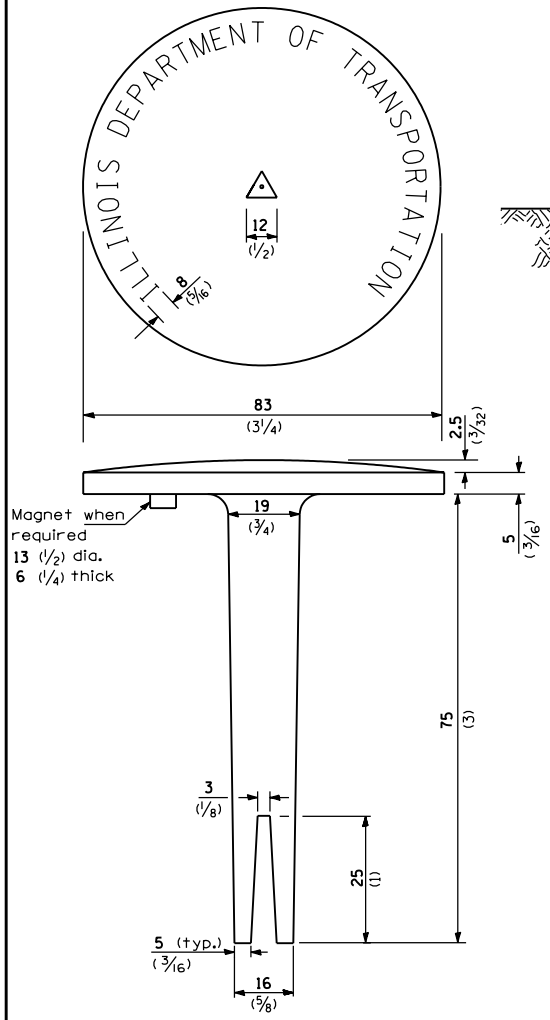

ALUMINUM TABLET

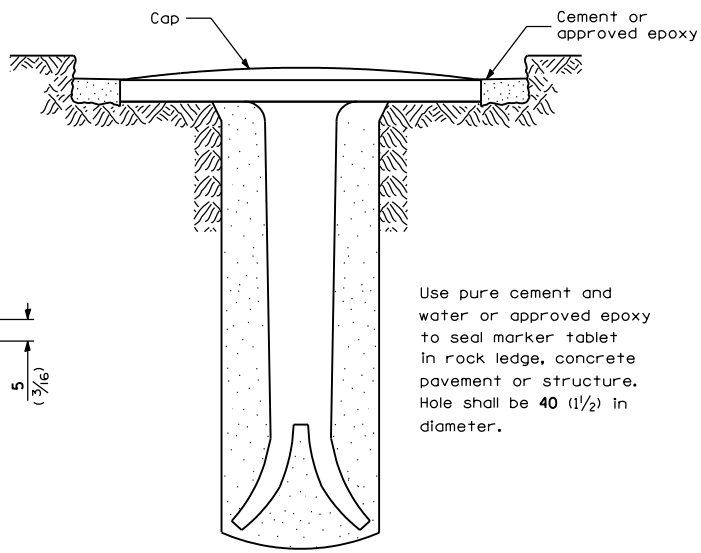

TYPE I

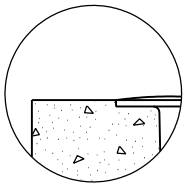

DETAIL A

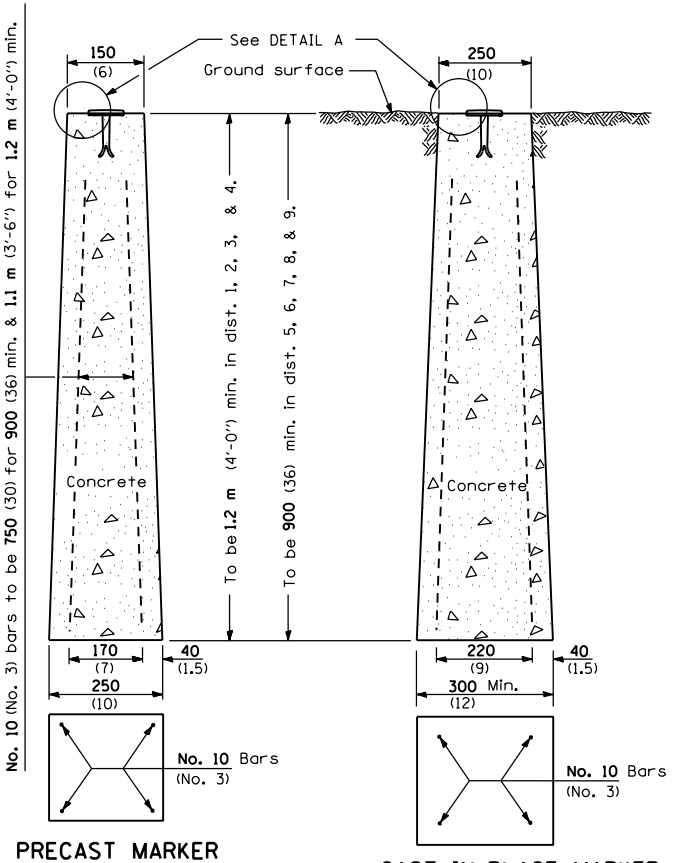

PRECAST MARKER

CAST-IN-PLACE MARKER

TYPE II

All dimensions are in millimeters (inches) unless otherwise shown.

Illinois Department of Transportation

PASSED January 1, 1997
ENGINEER OF POLICY AND PROCEDURES

APPROVED January 1, 1997
ENGINEER OF DESIGN AND ENVIRONMENT

ISSUED 1-1-97

DATE	REVISIONS
1-1-97	Renum. Standard 2135-1.
6-15-94	Totally revised.
	Added Metric.

PERMANENT SURVEY MARKERS

STANDARD 667101