OFFSETS TO FACE OF RAIL		
Post	X m (ft)	Y m (ft)
①	11.345 (37.22)	1.22 (4.0)
②	9.475 (31.09)	0.850 (2.79)
③	7.595 (24.92)	0.545 (1.79)
④	6.335 (20.79)	0.380 (1.25)
⑤	5.070 (16.64)	0.245 (0.80)
⑥	3.805 (12.49)	0.135 (0.45)
⑦	1.905 (6.25)	0.035 (0.11)
⑧	0 (0.00)	0 (0.00)

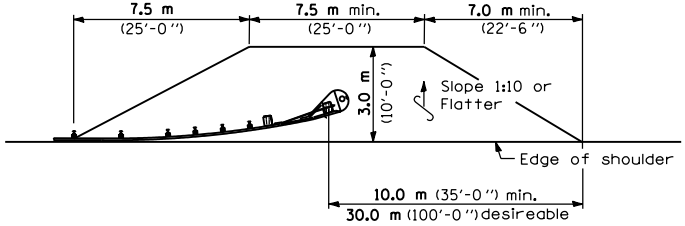

SHOULDER WIDENING TRANSITION

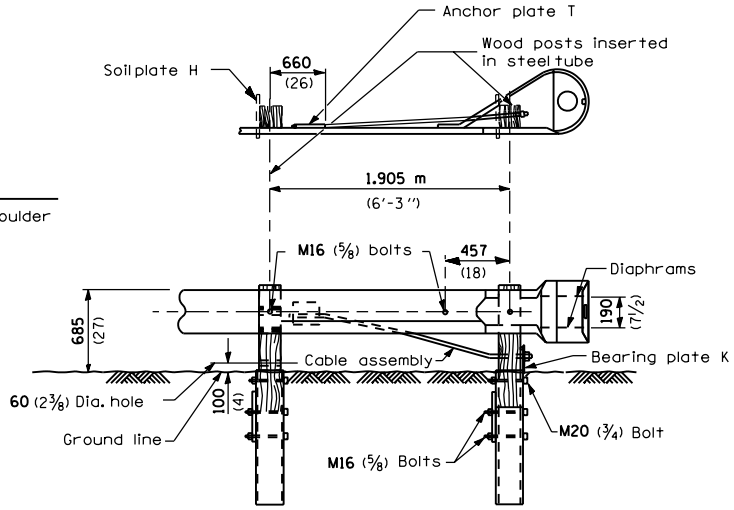

WOOD BREAKAWAY POSTS
TUBULAR STEEL FOUNDATIONS

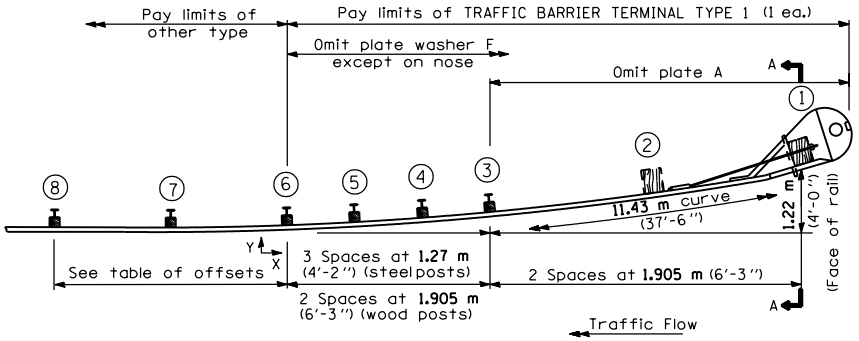

PLAN

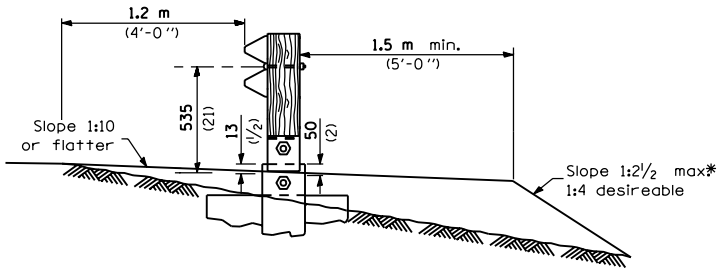

SECTION A-A

* If fill height exceeds 1.5 m (5'-0") use 1:3 max.

GENERAL NOTES

See Standard 630001 for details of guardrail not shown.

Posts at location 1 & 2 shall be wood breakaway posts. Posts other than 1 & 2 may be either standard wood posts or steel posts, at the option of the Contractor. If standard wood posts are used, one post shall be located midway between and in lieu of posts 4 & 5. The offset (Y) for this post shall be 300 mm (12 inches).

A two-piece assembly may be substituted for the one piece nose shown above.

The bearing plate K shall be held in position by (2) two eightpenny nails driven into the post and bent over the top of the plate.

All slope ratios are expressed as units of vertical displacement to units of horizontal displacement (V:H).

All dimensions are in millimeters (inches) unless otherwise shown.

Illinois Department of Transportation

APPROVED January 1, 2000
ENGINEER OF LOCAL ROADS AND STREETS

APPROVED January 1, 2000
ENGINEER OF DESIGN AND ENVIRONMENT

ISSUED 1-1-97

DATE	REVISIONS
1-1-00	Revised block-outs
	to wood.
1-1-97	Renum. Standard

TRAFFIC BARRIER TERMINAL TYPE 1

(Sheet 1 of 2)

STANDARD B.L.R. 23-1

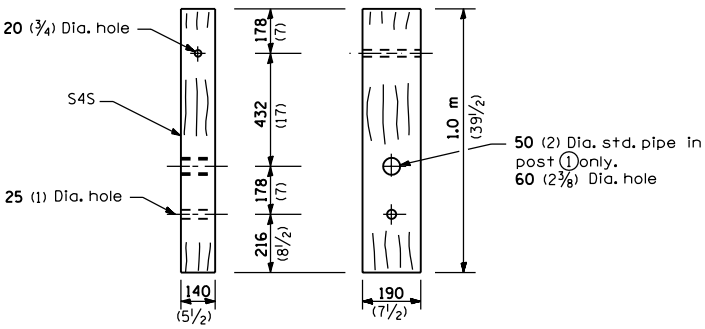

WOOD BREAKAWAY POST

(2 ea.)

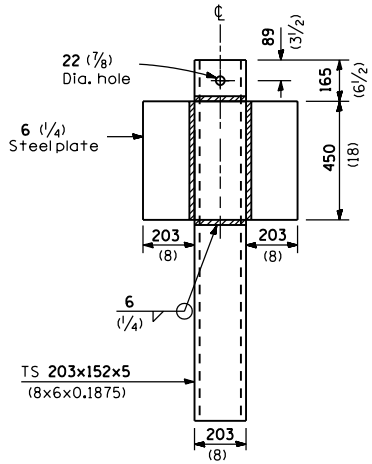

ALTERNATE SOIL PLATE CONNECTION

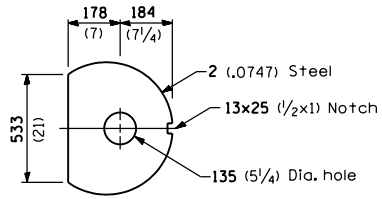

DIAPHRAGM

(2 ea.)

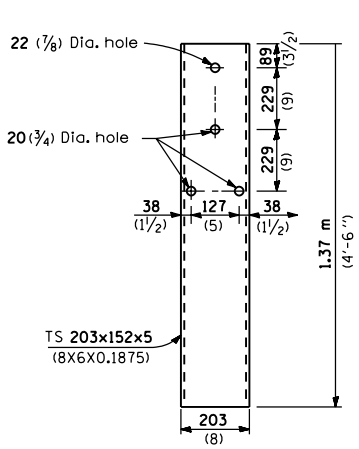

STEEL TUBE

(2 ea.)

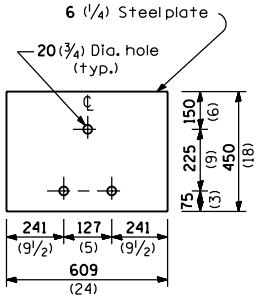

SOIL PLATE H

(2 ea.)

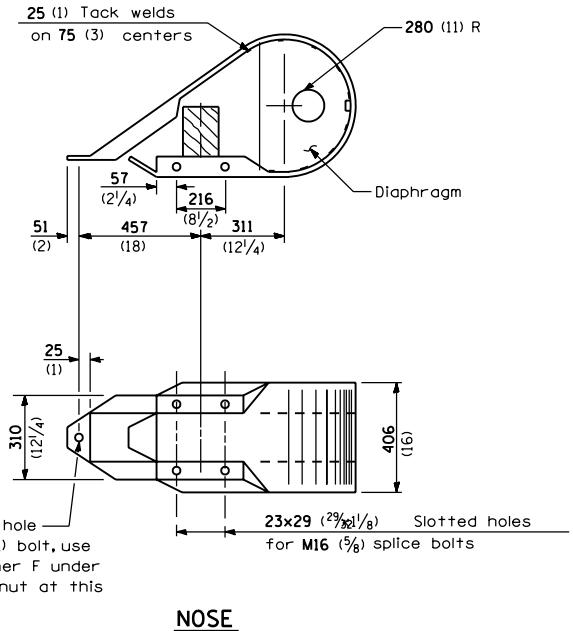

NOSE

(1 ea.)

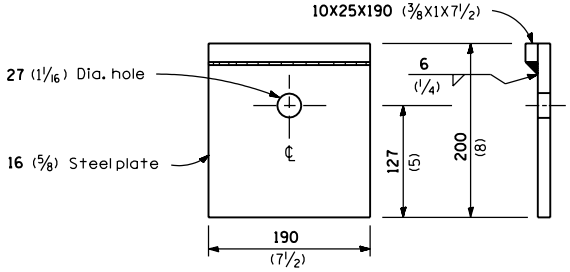

BEARING PLATE K

(1 ea.)

All dimensions are in millimeters (inches) unless otherwise shown.

Illinois Department of Transportation

APPROVED January 1, 2000
ENGINEER OF LOCAL ROADS AND STREETS

APPROVED January 1, 2000
ENGINEER OF DESIGN AND ENVIRONMENT

ISSUED 1-1-97

TRAFFIC BARRIER TERMINAL TYPE 1

(Sheet 2 of 2)

STANDARD B.L.R. 23-1