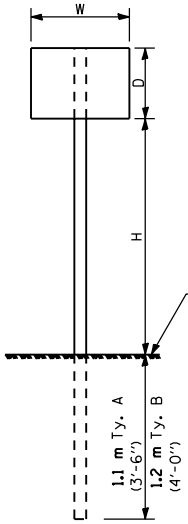

ONE POST INSTALLATION

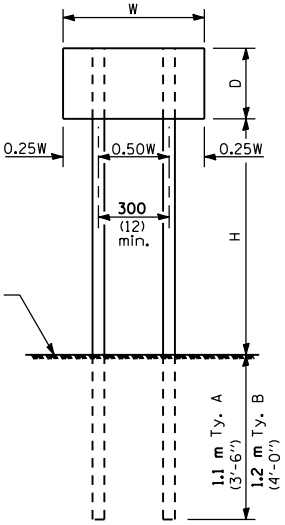

TWO POST INSTALLATION

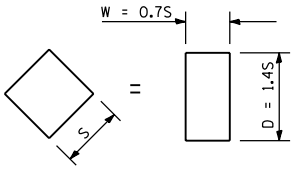

For diamond shaped sign with side S as shown, use required post size for a sign with W = 0.7S and D = 1.4S.

SIGN DEPTH (D)	H	NO. AND TYPE OF POST FOR SIGN WIDTH (W)				
		300 (12)	450 (18)	600 (24)	750 (30)	900 (36)
450 (18)	1.5 m (5'-0")	A	A	A	A	A
	1.7 m (5'-6")	A	A	A	A	A
	1.8 m (6'-0")	A	A	A	A	B
	2.0 m (6'-6")	A	A	A	A	B
	2.1 m (7'-0")	A	A	A	A	B
	2.3 m (7'-6")	A	A	A	A	B
	2.4 m (8'-0")	A	A	A	A	B
	2.6 m (8'-6")	A	A	A	B	B
	2.7 m (9'-0")	A	A	A	B	B
600 (24)	1.5 m (5'-0")	A	A	A	A	B
	1.7 m (5'-6")	A	A	A	A	B
	1.8 m (6'-0")	A	A	A	B	B
	2.0 m (6'-6")	A	A	A	B	B
	2.1 m (7'-0")	A	A	A	B	B
	2.3 m (7'-6")	A	A	A	B	B
	2.4 m (8'-0")	A	A	A	B	2A
	2.6 m (8'-6")	A	A	B	B	2A
	2.7 m (9'-0")	A	A	B	B	2A
750 (30)	1.5 m (5'-0")	A	A	A	B	B
	1.6 m (5'-6")	A	A	A	B	2A
	1.8 m (6'-0")	A	A	A	B	2A
	2.0 m (6'-6")	A	A	A	B	2A
	2.1 m (7'-0")	A	A	B	B	2A
	2.3 m (7'-6")	A	A	B	B	2A
	2.4 m (8'-0")	A	A	B	B	2A
	2.6 m (8'-6")	A	A	B	2A	2A
	2.7 m (9'-0")	A	A	B	2A	2A
900 (36)	1.5 m (5'-0")	A	A	B	B	2A
	1.7 m (5'-6")	A	A	B	B	2A
	1.8 m (6'-0")	A	A	B	B	2A
	2.0 m (6'-6")	A	A	B	2A	2A
	2.1 m (7'-0")	A	A	B	2A	2A
	2.3 m (7'-6")	A	A	B	2A	2A
	2.4 m (8'-0")	A	B	B	2A	2A
	2.6 m (8'-6")	A	B	B	2A	2B
	2.7 m (9'-0")	A	B	2A	2A	2B
1.2 m (4'-0")	1.5 m (5'-0")	A	A	B	2A	2A
	1.7 m (5'-6")	A	B	B	2A	2A
	1.8 m (6'-0")	A	B	B	2A	2A
	2.0 m (6'-6")	A	B	2A	2A	2B
	2.1 m (7'-0")	A	B	2A	2A	2B
	2.3 m (7'-6")	A	B	2A	2B	2B
	2.4 m (8'-0")	A	B	2A	2B	2B
	2.6 m (8'-6")	B	B	2B	2B	2B
	2.7 m (9'-0")	B	2A	2B	2B	2B

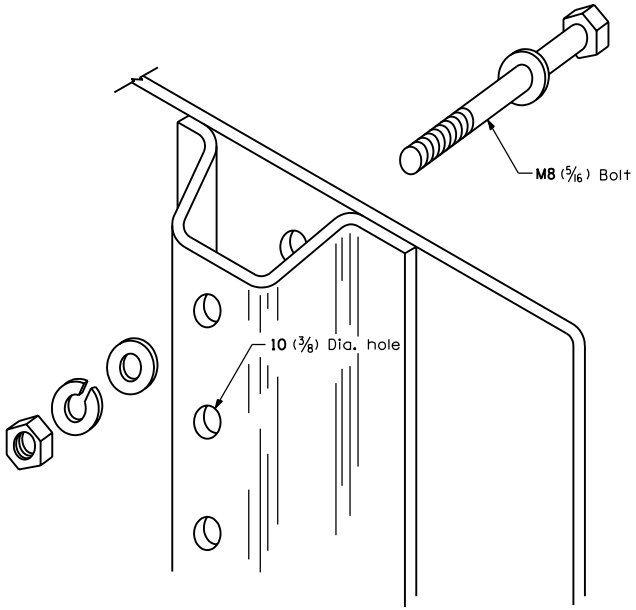

DETAIL OF MOUNTING SIGN TO POST

NOTE: Minimum of 2 bolts per post required.

GENERAL NOTES

DESIGN: Current AASHTO Standard Specifications for Structural Supports for Highway Signs, Luminaires and Traffic Signals.

LOADING: for 95 km/h (60 mph) wind velocity with 30% gust factor, normal to sign.

SOIL PRESSURE: Minimum allowable soil pressure 120 kPa (1.25 tsf).

See Standard 720011 for details of Types A and B posts.

All dimensions are in millimeters (inches) unless otherwise shown.

Illinois Department of Transportation

PASSED January 1, 1997
ENGINEER OF POLICY AND PROCEDURES

APPROVED January 1, 1997
ENGINEER OF DESIGN AND ENVIRONMENT

ISSUED 1-1-97

DATE	REVISIONS
1-1-97	Renum. Standard 2363-2.
6-15-94	Moved G.N. to Specs
	Added Metric

APPLICATIONS OF TYPES A & B METAL POSTS (FOR SIGNS & MARKERS)

STANDARD 729001