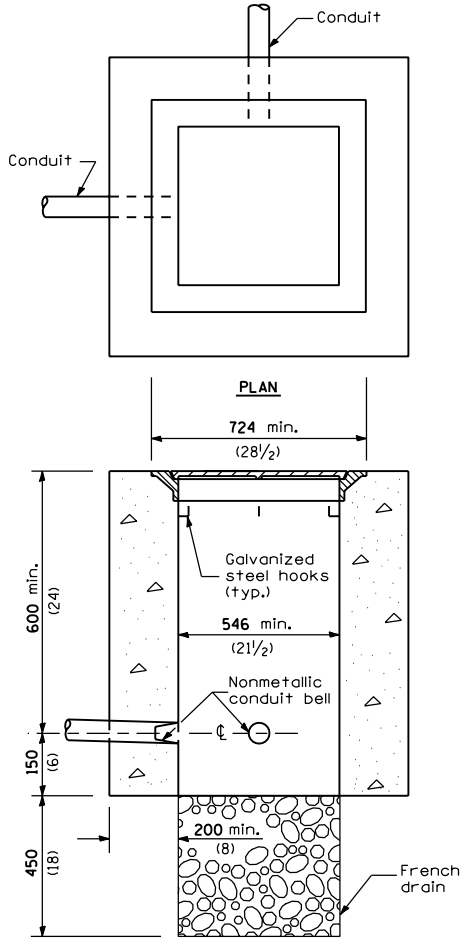

ELEVATION

PC CONCRETE

(Frame and cover **64 kg** (140 lbs.) min.)

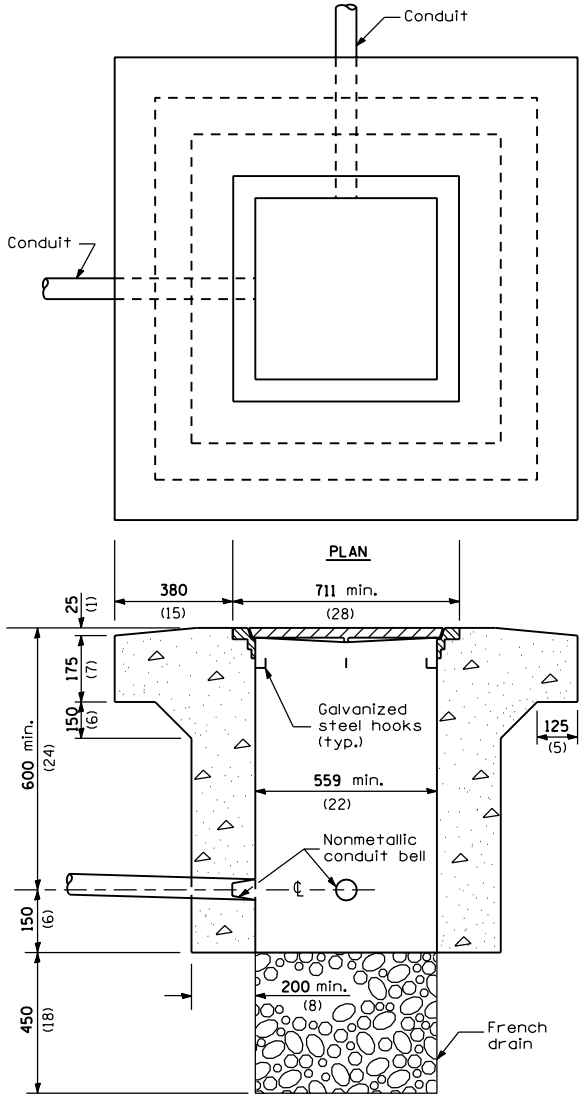

ELEVATION

PC CONCRETE - HEAVY DUTY

(Frame and cover **118 kg** (260 lbs.) min.)

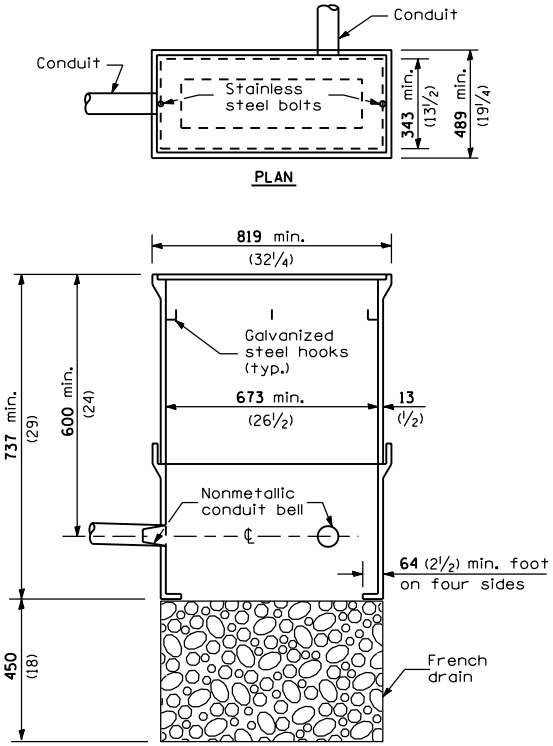

ELEVATION

POLYMER CONCRETE

All dimensions are in millimeters (inches) unless otherwise shown.

Illinois Department of Transportation

APPROVED January 1, 1997
ENGINEER OF OPERATIONS

APPROVED January 1, 1997
ENGINEER OF DESIGN AND ENVIRONMENT

ISSUED 1-1-97

DATE	REVISIONS
1-1-97	Renum. Standard 2368-2.
	Rev. casting & inside
	dim. for heavy duty.
2-1-95	Del. note. Incr. F & G
	width for heavy duty.
	Rev. mort. to poly. conc.

CONCRETE HANDHOLES

STANDARD 814001