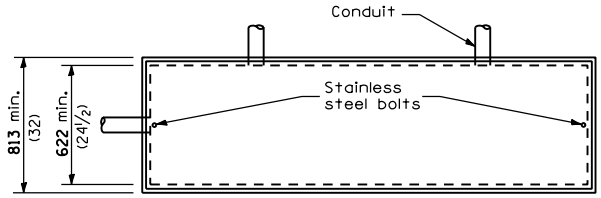


PLAN

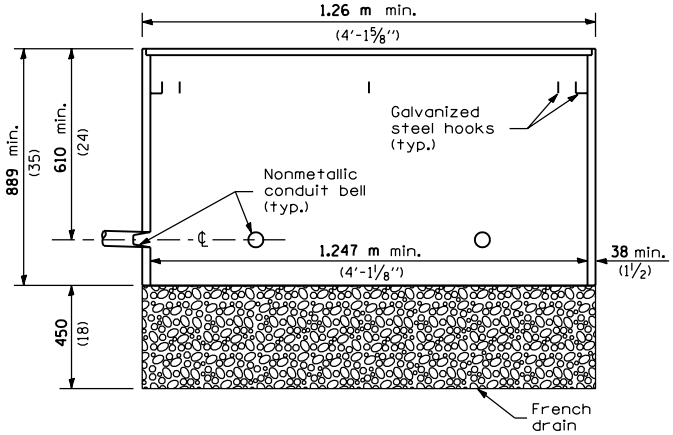


ELEVATION

## POLYMER CONCRETE

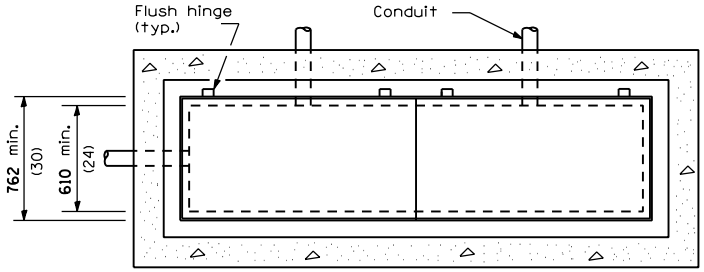


PLAN

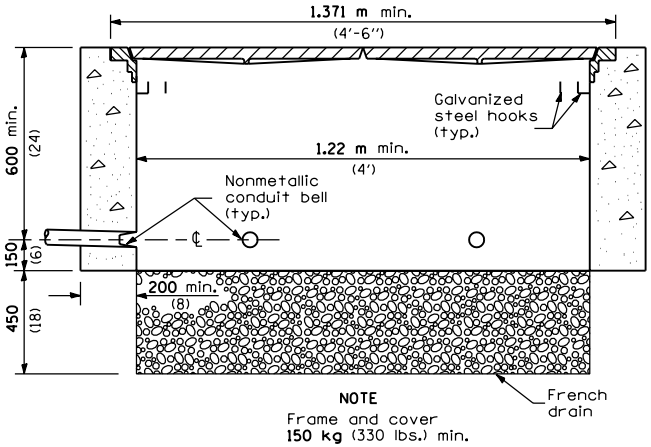


NOTE
Frame and cover
150 kg (330 lbs.) min.

ELEVATION

## CONCRETE

All dimensions are in millimeters (inches) unless otherwise shown.

Illinois Department of Transportation

APPROVED January 1, 1997
ENGINEER OF OPERATIONS

APPROVED January 1, 1997
ENGINEER OF DESIGN AND ENVIRONMENT

ISSUED 1-1-97

| DATE | REVISIONS |
|---|---|
| 1-1-97 | Renum. Standard 2369-2. |
| | |
| | |
| 2-1-95 | Moved notes to Specs. |
| | Rev. mortar to polymer |
| | concrete. Added metric. |

# DOUBLE HANDHOLES

**STANDARD 814006**