INDEX OF
BDE PROCEDURE MEMORANDUMS
New Series

Memo No.	Date/Status	Subject
1-00	4/3/00	New Series of BDE Procedure Memorandums
2-00	4/3/00	Project Files Documentation
3-00	*See disposition table*	*Land Survey Monuments*
4-00	*See disposition table*	*Rules and Regulations Governing Sealing of Abandoned Water Wells*
5-00	4/3/00	Value Engineering Program
6-00	4/3/00	Local Participation in Spot Safety Improvement Projects
7-00	*See disposition table*	*FHWA Oversight & Involvement on Federal-Aid Projects*
8-00	4/3/00	Federal Participation in Stockpiling of Salvage Materials
9-00	4/3/00	Surplus Excavation Disposal
10-00	*See disposition table*	*Subgrade Construction Under Rigid Pavements*
11-00	*See disposition table*	*Selection of Full Depth Asphalt Pavement Surface Course Thickness and Asphalt Cement Grade*
12-00	*See disposition table*	*Policy for the Use of Bituminous Surfaces*
13-00	*See disposition table*	*Pipe Culverts and Storm Sewers*
14-00	*See disposition table*	*Roadside Seeding in Areas Disturbed By Construction*
15-02	4/19/02	Procedures to Minimize Motorists' Costs and Inconvenience
16-00	4/3/00	Quality Assurance/Quality Control Guidelines for Work By Consulting Engineers
17-04B	12/1/04	Architectural and Engineering Report and Negotiation Guidelines for Engineering Agreements and Supplements
18-00	*See disposition table*	*Procedures for Highway Project Noise Analyses*
19-00	*See disposition table*	*Procedures for Concurrent NEPA/404 Processes*
20-00	*See disposition table*	*FHWA Interstate Access Approval*
21-01	*See disposition table*	*Air Quality Information for the "Affected Environment" Section of EISs and EAs*
22-01	*See disposition table*	*Documentation of Congestion Management System Alternatives*
23-01	7/24/01	Pavement Patching for Multilane Jointed Plain Concrete Pavement (JPCP), Jointed Reinforced Concrete Pavement (JRCP), Asphaltic Concrete (AC) Overlaid JPCP and AC Overlaid JRCP
24-02	*See disposition table*	*Earthwork Quantities*
25-01	*See disposition table*	*In-Stream Work and Erosion Control for Bridges/Culverts*
26-02A	6/7/02	Compliance with Asbestos Requirements For Highway Bridges
27-02	7/1/02	Temporary Concrete Barrier
28-02	7/1/02	Validity of Special Waste Assessment Results
29-02	*See disposition table*	*Policy Resurfacing Program*
30-02A	*See disposition table*	*Roadside Barriers, Median Barriers, and Terminals*

Memo No.	Date/Status	Subject
31-03	3/19/03	Incidental Taking Authorization Procedures
32-03	3/19/03	Changes in Section 4(f) Applicability for Actions Involving U.S. Coast Guard Permits
33-03	7/11/03	Wetlands Compliance Procedures
34-04	2/6/04	Impact Attenuators (Crash Cushions)
35-03	8/1/03	Detectable Warnings for Curb Ramps, and Other Locations
36-03	10/14/03	Guardrail
37-03	10/14/03	Documenting Microscale Analysis Information
38-04	1/2/04	Errata for the BDE Manual 2002 Edition
39-04	3/8/04	Concrete Barrier
40-04	6/30/04	Addressing Impaired Waters/TMDLs in Project Environmental Documentation
41-04	6/30/04	Delegation of Approval Authorities to Districts
42-04	8/31/04	Changes in the BDE Manual Guidance on Air Quality and Related Subjects
43-04	10/8/04	Coordination with IDNR on Natural Resource Issues

BDE Procedure Memorandums – Revision History (beginning 6/30/04)

Memo No.	Revision Date	Revision(s)	Authorized By
17-04A	6/30/04	Modified "Architectural and Engineering Report and Negotiation Guidelines for Engineering Agreements and Supplements" as follows: Page 1 Corrected reference number for BDE 17-04A. Page 4 Revised wording on Startup Agreement and Supplemental Agreements. Page 7 Revised item 13 on consultant evaluations/deliverables. Page 9 Added ISO form identification number.	Michael L. Hine (Signature on PM original)
40-04	6/30/04	Issued new PM to provide guidance on how to address Impaired Waters/TMDLs in project environmental documentation.	Michael L. Hine (Signature on PM original)
41-04	6/30/04	Issued new PM on delegation of approval authorities to districts.	Michael L. Hine (Signature on PM original)
42-04	8/31/04	Issued new PM on changes in BDE Manual information regarding air quality and related subjects.	Michael L. Hine (Signature on PM original)
43-04	10/8/04	Issued new PM to revise information in BDE Manual Chapter 22 concerning coordination with IDNR on Natural Resource Issues	Michael L. Hine (Signature on PM original)
17-04B	12/1/04	Issued revised PM to make changes in the "Architectural and Engineering Report and Negotiation Guidelines for Engineering Agreements and Supplements" to make them conform to ISO 9001 requirements.	Michael L. Hine (Signature on PM original)

DISPOSITION OF
***BDE* PROCEDURE MEMORANDUMS**
New Series

Memo No.	Subject	Disposition
3-00	Land Survey Monuments	Incorporated in Section 58-8 of the BDE Manual 2002 Edition
4-00	Rules and Regulations Governing Sealing of Abandoned Water Wells	Incorporated in Section 58-7 of the BDE Manual 2002 Edition
7-00	FHWA Oversight & Involvement on Federal-Aid Projects	Incorporated in Section 31-7 of the BDE Manual 2000 Edition
10-00	Subgrade Construction Under Rigid Pavements	Incorporated in Section 54-2.01(f)7 of the BDE Manual 2002 Edition
11-00	Selection of Full Depth Asphalt Pavement Surface Course Thickness and Asphalt Cement Grade	Incorporated in Sections 53-4.08(c), & 54-5.01(h)(7), of the BDE Manual 2002 Edition
12-00	Policy for the Use of Bituminous Surfaces	Incorporated in Section 53-4.08(e) of the BDE Manual 2002 Edition.
13-00	Pipe Culverts and Storm Sewers	Incorporated in Section 40-3.07 of the BDE Manual 2002 Edition.
14-00	Roadside Seeding in Areas Disturbed By Construction	Incorporated in Section 59-7.15 of the BDE Manual 2002 Edition.
18-00	Procedures for Highway Project Noise Analyses	Incorporated in Section 26-6 of the BDE Manual 2002 Edition.
19-00	Procedures for Concurrent NEPA/404 Processes	Incorporated in Section 22-4 of the BDE Manual 2002 Edition.
20-00	FHWA Interstate Access Approval	Incorporated in Chapter 37 of the BDE Manual 2002 Edition. (PM proposed for re-issuance in the future to clarify items under discussion with FHWA.)
21-01	Air Quality Information for the “Affected Environment” Section of EISs and EAs	Incorporated in Sections 24-3.05 & 25-3.07(d) of the BDE Manual 2002 Edition.
22-01	Documentation of Congestion Management System Alternatives	Incorporated in Sections 23-1.05(d), 23-4.02, 24-3.06, & 25-3.08 of the BDE Manual 2002 Edition.
24-02	Earthwork Quantities	Incorporated in Section 64-2.04(a) of the BDE Manual 2002 Edition.
25-01	In-Stream Work and Erosion Control for Bridges/Culverts	Incorporated in Sections 28-2, 39-3.03, 59-8.02, & 59-8.04 of the BDE Manual 2002 Edition.
29-02	Policy Resurfacing Program	Incorporated in Section 53-4.05(a), (b), & (d) of the BDE Manual 2002 Edition.
30-02A	Roadside Barriers, Median Barriers, and Terminals	Incorporated in Sections 38-5.01(a), 38-6.06, & 38-7.04(d) of the BDE Manual 2002 Edition.

Illinois Department of Transportation
2300 South Dirksen Parkway / Springfield, Illinois / 62764

BDE PROCEDURE MEMORANDUM

NUMBER: I-00

SUBJECT: New Series of BDE Procedure Memorandums

DATE: April 3, 2000

This memorandum supersedes BDE Procedure Memorandum 92-1, dated September 16. 1992.

With the issuance of the BDE Manual, we have eliminated the need for most of the current BDE Procedure Memorandums because their contents have been incorporated into the Manual. We also have incorporated the contents of most of the outstanding Design Memorandums and BLE Procedure Memorandums. To consolidate the remaining memorandums, we are hereby initiating a new series of BDE Procedure Memorandums. This new series will have a different format and numbering system and will replace the previous BDE Procedure Memorandums, Design Memorandums, and BLE Procedure Memorandums. Effective with this transmittal, we are deleting all previously issued memorandums in these series. The attached indexes indicate the disposition of the content of each memorandum. (We also are attaching an index that shows the disposition of sections from the former Design Manual and Location and Environment Manual. This information is not directly related to the new series of Procedure Memorandums but we believe it is appropriate to issue it with the other information on disposition of previous policy and procedures.)

As each item number in the new Procedure Memorandum series is assigned to a transmittal, the number will stay with that subject until such time as the number may be retired. An original transmittal will use the item number within the series followed by the last two digits of the year of issuance. Any future updates to that transmittal will use the original item number but will end with the last two digits of the year of the update. If more than one update to a given memorandum is issued in the same year, the number will include a letter suffix after the item number.

At this time, we are issuing the first group of memorandums in the new series, along with an index for those memorandums. We will continue to use BDE Procedure Memorandums as the means for disseminating changes in procedures and policies in the interim between the issuance of annual updates to the BDE Manual.

Engineer of Design and Environment Michael L. Hine

Attachments

DISPOSITION OF
***BDE* PROCEDURE MEMORANDUMS**
Original Series

Memo No.	Subject	Disposition
92-1	BDE Procedure Memoranda	Revised and reissued as BDE Procedure Memorandum 1-00, April 3, 2000.
95-2	Evaluation of Consultant's Performance	Incorporated in Chapter 8 of the BDE Manual, 11/99.
93-3(R)	Criteria for Coordination with SCS & IDOA	Incorporated in Section 26-10 of the BDE Manual, 10/97.
93-4	Environmental Class of Action Determination Procedures	Incorporated in Section 23-2 of the BDE Manual, 10/97.
93-5	Material Selection at Intersections	Incorporated in Section 54-1.05 of the BDE Manual, 11/99.
96-6	Environmental Class of Action Determination Process: Guidance for Resource Impact Analysis and Documentation	Incorporated in Section 23-2 of the BDE Manual, 10/97.
93-7	Pavement Patching of State Highways Including Interstate Highways	Incorporated in Chapter 53 of the BDE Manual, 11/99.
96-8	Planning/Design Phase Special Waste Procedures	Incorporated in Section 27-2 of the BDE Manual, 10/97.
94-9	Booklet - Criteria for Metric Highway Design	Incorporated in Part V of the BDE Manual, 11/99.
94-10	Earthwork	Incorporated in Section 64-2.02 of the BDE Manual, 10/97.
94-11	Daily Production Rates	Incorporated in Section 66-2.03 of the BDE Manual, 10/97.
94-12	Accessibility Standards for the Disabled	Incorporated in Section 58-1 of the BDE Manual, 11/99.
94-13	Indirect and Cumulative Impacts	Incorporated in Section 22-6.02 of the BDE Manual, 10/97.
94-14	Supplemental Design Guidelines For Expressways	Incorporated in Chapter 45 of the BDE Manual, 11/99.
94-15	Change in AD 1006 Form Requirements	Incorporated in Section 26-10 of the BDE Manual, 10/97.
94-16	Selection of Full Depth Asphalt Pavement Surface Course Thickness and Asphalt Cement Grade	Reissued as BDE Procedure Memorandum 11-00, April 3, 2000.
95-17	Quality Assurance/Quality Control Guidelines for Work By Consulting Engineers	Reissued as BDE Procedure Memorandum 16-00, April 3, 2000.
95-18	Coordination with the Department of the Interior	Incorporated in Section 22-5.04 of the BDE Manual, 10/97.
97-19	Pipe Culverts and Storm Sewers	Reissued as BDE Procedure Memorandum 13-00, April 3, 2000.

DISPOSITION OF
***BDE* PROCEDURE MEMORANDUMS**
Original Series

Memo No.	Subject	Disposition
95-20	Revised "3 R" Policies in Metric Units for Arterials, Collectors, and Unmarked Routes on the State Highway System	Incorporated in Chapter 49 of the BDE Manual, 11/99.
95-21	Policies and Procedures for Accommodating Bicycle Travel in Highway Improvements	Incorporated in Chapter 17 of the BDE Manual, 6/99.
95-22	FHWA Oversight & Involvement on Federal-aid Projects	Revised and reissued as BDE Procedure Memorandum 7-00, April 3, 2000.
95-23	New Truck Lengths Authorized on State Highways	Incorporated in Section 36-1.08 of the BDE Manual, 11/99.
96-24	Soliciting Views from the Public and Interested Persons for Historic Preservation Act Compliance	Incorporated in Section 26-5 of the BDE Manual, 10/97.
96-25	Change in Mailing Address for Circulating Environmental Impact Statements to the USEPA	Deleted April 3, 2000. (No longer needed since FHWA handles submittals of DEISs and FEISs to USEPA in Washington.)
97-26	Specialty Items	Incorporated in Section 63-4.04 of the BDE Manual, 10/97.
97-27	Surplus Excavation Disposal	Reissued as BDE Procedure Memorandum 9-00, April 3, 2000.
97-28	Intersection Design Near Railroads	Incorporated in Section 36-8 of the BDE Manual, 11/99.
97-29	Report Format for 3P and SMART Projects	Incorporated in Section 12-3.08 of the BDE Manual, 11/99.
97-30	Responding to Freedom of Information Act Requests for Special Waste Investigation Information	Incorporated in Section 27-2.10 of the BDE Manual, 11/99.
97-31	Cooperating Agency Contact Procedures	Incorporated in Sections 24-2 and 25-2 of the BDE Manual, 10/97.
98-32	Erosion and Sediment Control	Incorporated in Section 59-8 of the BDE Manual, 11/99.
99-33	Value Engineering Program	Reissued as BDE Procedure Memorandum 5-00, April 3, 2000.
99-34	Roadside Seeding in Areas Disturbed By Construction	Reissued as BDE Procedure Memorandum 14-00, April 3, 2000.
00-35	Procedures to Minimize Motorists' Costs and Inconvenience	Reissued as BDE Procedure Memorandum 15-00, April 3, 2000.

DISPOSITION OF
***BDE* PROCEDURE MEMORANDUMS**
Original Series

Memo No.	Subject	Disposition
00-36	Architectural and Engineering Report and Negotiation Guidelines for Engineering Agreements and Supplements	Refer to BDE Procedure Memorandum 17-02, 6/7/02.

1215jb.doc

DISPOSITION OF
DESIGN MEMORANDUMS

Memo No.	Subject	Disposition
95-1	Introduction of Numbered Design Memoranda	Deleted April 3, 2000.
2		Deleted previously.
87-3	Special Provisions and Incidental Work	Incorporated in Sections 66-1.03 and 66-1.04 of the BDE Manual, 10/97.
87-4	Project Files Documentation	Reissued as BDE Procedure Memorandum 2-00, April 3, 2000.
96-5	Mailbox Turnouts	Incorporated in Section 58-5 of the BDE Manual, 11/99.
87-6	Local Participation in Spot Safety Improvement Projects	Reissued as BDE Procedure Memorandum 6-00, April 3, 2000.
95-7	Bituminous Concrete Surface Course Class I on Waterproofed Bridge Decks	Incorporated in Section 53-4.02 of the BDE Manual, 11/99.
95-8	Selection of Highway Design Grades	Incorporated in Section 33-6.04 of the BDE Manual, 11/99.
95-9	Architectural and Engineering Report and Negotiation Guidelines for Engineering Agreements and Supplements	Incorporated in Chapter 8 of the BDE Manual, 11/99. Also refer to BDE Procedure Memorandum 17-02, 6/7/02.
95-10	Bridge Omission Tapers	Incorporated in Section 49-3.09 of the BDE Manual, 11/99.
11		Deleted previously.
95-12	Land Survey Monuments	Reissued as BDE Procedure Memorandum 3-00, April 3, 2000.
95-13	Joint Local Agency-State Agreements	Incorporated in Section 5-1.03 of the BDE Manual, 11/99.
14		Deleted previously.
15		Deleted previously.
95-16	Reflective Cracking of Bituminous Concrete Overlays	Incorporated in Section 53-4.01 of the BDE Manual, 11/99.
17		Deleted previously.
87-18	Temporary Bridges	Incorporated in Section 55-3.09 of the BDE Manual, 11/99.
87-19	Bridge Embankment Quantities	Incorporated in Section 66-2.04 (G) of the BDE Manual, 10/97.
90-20	Rules and Regulations Governing Sealing of Abandoned Water Wells	Reissued as BDE Procedure Memorandum 4-00, April 3, 2000.
95-21	Bridge Condition Reports	Incorporated in Section 39-3.02 of the BDE Manual, 11/99.

DISPOSITION OF
DESIGN MEMORANDUMS

Memo No.	Subject	Disposition
87-22	Prefinal Review of District Prepared Plans	Incorporated in Section 66-4 of the BDE Manual, 10/97.
23		Deleted previously.
87-24	General Hydraulics-Hydraulic Data	Incorporated in Chapter 40 of the BDE Manual, 11/99.
95-25	Temporary Sidewalks During Construction	Incorporated in Section 17-3.06 of the BDE Manual, 11/99.
87-26	Federal Participation in Stockpiling of Salvage Materials	Reissued as BDE Procedure Memorandum 8-00, April 3, 2000.
95-27	Plan Preparation and Field Location of Utilities	Incorporated in Chapter 6 of the BDE Manual, 11/99.
87-28	Submittal of Detailed Plans to Utility Companies	Incorporated in Chapter 6 of the BDE Manual, 11/99.
96-29	Guidelines for Upgrading Existing Interstate Routes for Safety Features	Incorporated in Chapter 50 of the BDE Manual, 11/99.
95-30	Settlement of Bridge Approach Shoulders	Incorporated in Section 53-4.06 of the BDE Manual, 11/99.
95-31	Bridge Improvement Coordination	Incorporated in Chapter 39 of the BDE Manual, 11/99.
32		Deleted previously.
90-33	Deck Slab Repair Quantities	Incorporated in Section 66-4.01 of the BDE Manual, 10/97.
34		Deleted previously.
95-35	General Hydraulics – Division of Water Resources Permit Criteria	Incorporated in Chapter 40 of the BDE Manual, 11/99.
95-36	Revisions to Approved Design Reports, Project Reports and Public Commitments	Incorporated in Chapter 64 and Part III of the BDE Manual, 10/97.
37		Deleted previously.
38		Deleted previously.
39		Deleted previously.
95-40	Reduced Traffic Control for Roads Closed to Through Traffic	Incorporated in Chapter 55 of the BDE Manual, 11/99.
95-41	Rehabilitation of Interstate Shoulders Not Associated with Pavement Resurfacing	Incorporated in Section 53-4.06 of the BDE Manual, 11/99.
95-42	Erosion Control	Incorporated in Section 59-8 of the BDE Manual, 11/99.
95-43	Subgrade Construction Under Rigid Pavements	Reissued as BDE Procedure Memorandum 10-00, April 3, 2000.
44		Deleted previously.
96-45	Guidelines For Resurfacing of Highways on the State System including Interstate Highways	Incorporated in Section 53-4 of the BDE Manual, 11/99.

DISPOSITION OF
DESIGN MEMORANDUMS

Memo No.	Subject	Disposition
95-46	Pavement Subsealing	Incorporated in Section 53-4 of the BDE Manual, 11/99.
95-47	Policy for the Use of Bituminous Surfaces	Incorporated in Section 53-4.02 of the BDE Manual, 11/99. (*The content of Section 53-4.02 is modified by BDE Procedure Memorandum 12-00, dated April 3, 2000.*)
95-48	Policy for Documentation of Floodplain Encroachment Designs	Incorporated in Chapter 40 of the BDE Manual, 11/99.
49		Deleted previously.
95-50	Earthwork Quantities for Separate Grading and Paving Contracts	Incorporated in Section 64-2.04(b) of the BDE Manual, 10/97.
95-51	Trees	Incorporated in Chapter 59 of the BDE Manual, 11/99.
95-52	Rehabilitation of Interchange Ramps	Incorporated in Section 53-4.05 of the BDE Manual, 11/99.
95-53	Policy for Incentive and Disincentive Clauses	Incorporated in Section 66-2.04 of the BDE Manual, 10/97.
95-54	Shoulder Rumble Strips	Incorporated in Section 53-4.06 of the BDE Manual, 11/99.
55		Deleted previously.
56		Deleted previously.
92-57	Documentation of the Hydraulic Design of Pavement and Roadside Drainage Facilities	Incorporated in Chapter 40 of the BDE Manual, 11/99.

1216jb.doc

DISPOSITION OF
***BLE* PROCEDURE MEMORANDUMS**

Memo No.	Subject	Disposition
95-1	Federal Freedom of Information Act and Preliminary Environmental Documents	Incorporated in Section 22-3.11 of the BDE Manual, 10/97.
95-2	Integrated Process for Environmental Surveys, Studies, and Associated Preliminary Coordination	Incorporated in Section 27-1 of the BDE Manual, 10/97.
95-3	Assessment and Documentation of Floodplain Encroachments for Federal-aid Projects	Incorporated in Section 26-7 of the BDE Manual, 10/97.
95-4	Procedures/Documentation Requirements for Use of the Categorical Exclusion Nationwide Section 404 Permit	Incorporated in Section 28-4 of the BDE Manual, 10/97.
95-5	Coordination of Projects with the Corps of Engineers	Incorporated in Section 22-5.03 and Section 28-4 of the BDE Manual, 10/97.
95-6	Coordination of Projects Involving Federal Lands	Incorporated in Section 22-5.02 of the BDE Manual, 10/97.
95-7	Applicability of Section 4(f) to Wetlands	Incorporated in Section 26-2.04(c) of the BDE Manual, 10/97.
95-8	Historic Bridges; Programmatic Section 4(f) Evaluation and Approval	Incorporated in Part III, Appendix A of the BDE Manual, 11/99.
95-9	Applicability of Section 4(f) to Architecturally Significant Historic Buildings	Incorporated in Section 26-2.04(d) of the BDE Manual, 10/97.
95-10	Programmatic Section 4(f) Evaluations and Approvals for Minor Improvements	Incorporated in Part III, Appendix A of the BDE Manual, 11/99.
95-11	Section 4(f) “Constructive Use”	Incorporated in Section 26-2.08 of the BDE Manual, 10/97.
95-12	CERCLIS List - Use and Documentation in Reports	Incorporated in Section 22-6.03 of the BDE Manual, 10/97.
95-13	Bridges on Curve	Incorporated in Section 32-3.07 of the BDE Manual, 11/99.
95-14	Effort to Reduce the Degree of Skew on Bridges	Incorporated in Section 39-4.09 of the BDE Manual, 11/99.
95-15	Rehabilitation of High Speed, Multi-Lane Highways	Incorporated in Part V of the BDE Manual, 11/99.
95-16	Interchange Ramp Terminal Cross-Sections	Incorporated in Chapter 37 of the BDE Manual, 11/99.
95-17	Processing of Project Reports for the Highway Safety Program	Incorporated in Section 12-5.07 of the BDE Manual, 11/99.
95-18	Review and Processing of Design Reports, Project Reports and Other Related Documents	Incorporated in Section 12-5 of the BDE Manual, 11/99.

DISPOSITION OF
***BLE* PROCEDURE MEMORANDUMS**

Memo No.	Subject	Disposition
95-19	Processing Access Control Revisions for Freeways/Expressways on the State Highway System	Incorporated in Chapter 37 of the BDE Manual, 11/99.
95-20	Changes in Access to the Interstate or State Freeway System	Incorporated in Chapter 35 of the BDE Manual, 11/99.
95-21	Traffic Signal Warrants for Improvements Involving Existing Traffic Signals	Incorporated in Section 57-4.04 of the BDE Manual, 11/99.

1217jb.doc

Disposition of Design Manual Sections

Design Manual Section	New BDE Manual Chapter
Section 1 Administration:	
Subject 1-000 Organization and Functions	Chapter 1 Organizations and Functions
Subject 1-100 Highway Systems	Chapter 43 Highway Systems
Subject 1-200 Programming	Omitted
Subject 1-300 Highway Financing	Omitted
Subject 1-400 Agreements	Chapter 5 Local Agency Agreements
Subject 1-500 Consulting Engineering Firms	Chapter 8 Consultant Projects
Section 2 General Design Policies:	
Subject 2-000 General	Part V Design of Highway Types
Subject 2-100 Highway Hardware	Chapter 38 Roadside Safety
Section 3 Location and Planning:	
Topics 3-001 and 3-020 Planning and Location	Chapter 11 Phase I Studies
Topic 3-060 Federal-Aid Programming	Omitted
Topic 3-070 Access Control Fencing	Chapter 35 Access Control
Topic 3-080 Establishing a Freeway	Chapter 12 Phase I Study Reports
Topic 3-090 Road Closures	Chapter 11 Phase I Studies
Subject 3-100 Utility Adjustments	Chapter 6 Utility Accommodation
Subject 3-200 Railroad-Highway Improvements	Chapter 7 Railroad Coordination
Subject 3-300 Roadside Development	Chapter 59 Landscaping / Erosion Control
Subject 3-400 Weighing Stations	Chapter 16 Rest Areas and Weigh Stations
Subject 3-500 Rest Areas	Chapter 16 Rest Areas and Weigh Stations
Subject 3-600 Highway Lighting	Chapter 56 Highway Lighting
Section 4 Bridges and Structures	Chapter 39 Structure Planning/Geometrics
Section 5 Surveying	Omitted (Aerial Surveys to Furnish)
Section 6 Drainage	Chapter 40 General Drainage Procedures
Section 7 Pavement Design	Chapter 54 Pavement Design and Chapter 53 Pavement Rehabilitation
Section 8 Plan Development/Contract Letting	Part VII Plans and Contracts
Topic 8-010 Maintaining Traffic	Chapter 55 Maintenance and Protection of Traffic Through Work Zones Chapter 14 Work Zone Traffic Management Studies

Disposition of L&E Manual Sections

L&E Section	New BDE Manual Chapter
Section 1 Administration	Chapter 1 Organizations and Functions Chapter 2 Project Development Network (Phase I) Chapter 3 Project Development Network (Phase II)
Section 2 General Design Policies	Part IV Roadway Design Elements
Section 3 Engineering Policies	Chapter 14 Intersection Design Studies Chapter 15 Interchange Design Studies Chapter 17 Bicycle And Pedestrian Facilities
Section 4 Public Involvement	Chapter 19 Public Involvement Guidelines
Section 5 Location Studies	Chapter 11 Corridor and Design Stuides Chapter 12 Phase I Engineering Reports
Section 6 Environment	Part III Environmental Procedures

Illinois Department of Transportation
2300 South Dirksen Parkway / Springfield, Illinois / 62764

BDE PROCEDURE MEMORANDUM

NUMBER: 2-00

SUBJECT: Project Files Documentation

DATE: April 3, 2000

This memorandum supersedes and replaces Design Memorandum 87-4, dated April 15, 1987.

Background

The purpose of this Memorandum is to prescribe the Design record keeping requirements necessary to document actions taken and conclusions reached in arriving at the project design, and to support claims for Federal reimbursement.

Applicability

The procedures in this memorandum are applicable to both Federal and Non-Federal projects.

Procedures

Project files should contain the following project-related records where applicable:

1. Programming data
2. Letting plans, Special Provisions and estimate
3. Supplemental Specifications applicable to the project
4. Computations
   a. Field survey notebooks and traverse computations
   b. Geometric computations
   c. Drainage computations and hydraulic analyses
   d. Structural computations for box culverts, bridges and structures
   e. Pavement design and economic analysis
   f. Lighting computations
   g. Quantity computations
   h. Unit price work sheets
5. Shop drawings
6. Third party agreements and force account estimates
7. Letters authorizing utility adjustments, preliminary engineering, force account by third parties and construction.

To the extent practicable, all computations retained by an office should be stored together on a project basis, and should contain an index indicating the file contents and the location and identification number of supporting documents filed elsewhere in the same office.

Computation sheets shall be numbered and the total number of pages indicated. They shall be bound with a cover sheet and identified. They shall be signed or initialed and dated by the person performing or checking them.

Where offsets from standardized tables are used, as in the design of three-centered curves and channelization approach treatments, appropriate notations should be made.

All values obtained through computation or use of standardized tables should be checked, preferably on an independent basis. For those pay items where agreements may be reached to make payment on the basis of planned quantities, an independent check shall be performed and noted. The resolution of any differences between original and checked computations shall be noted.

Where computations are performed by computer, an independent check is not required. However, the computation output sheet should be reviewed for obvious mistakes, and a copy included in the project files bearing the date and initials of the person accepting the output.

Due to the diversity of design activities within the Department of Transportation, it is not practical that the complete project files be stored in any one office or at any one location within an office. Documents should be retained in the office responsible for originating them. For example, Geometric computations, Drainage computations and Quantity computations should be filed in the District Office while Programming data and the Engineer's Estimate would be filed in the Central Office, Bureau of Design and Environment, and Structural Computations for bridges would be filed with the Bureau of Bridges and Structures. The following tabulation indicates those records which will be retained in the Central Office and those which should be retained in the District Office:

Central	District
Programming Data	Letting Plans and Special Provisions
Engineer's Estimate	Field Survey Data and Computations
Structural Computations	Aerial Survey Data and Computations
Lighting Computations (except District 1)	Geometric Computations

Central (Continued)	District (Continued)
Shop Drawings	Drainage Computations
Railroad Agreements	Pavement Design
Consultant Contracts	Quantity Computations
Letters of Authorization	Preliminary Estimate
	Utility Agreements

Documentation for Federal projects shall be retained for a minimum period of three years after FHWA final payment of the project. Documentation for Non-Federal projects shall be retained for a period of three years after project acceptance. (Records may be retained for longer periods if required by local records disposal plans). A listing of Federal Highway projects for which final payment has been received is periodically distributed by the Bureau of Budget and Fiscal Management. This listing may be used as a guide in scheduling records disposal.

In addition to the above, certain records must be retained for longer periods beyond those stated in the Federal-Aid Policy Guide 49 CFR 18.42. Records to be retained for seven (7) years after payment of final voucher include: extra work or change orders; auditor's work papers: and right-of-way certificates and maps. Records to be retained for twenty (20) years include: title sheet; typical cross-section sheets; and special layout sheets showing geometric features.

Microfilm may be substituted for the original documents after final payment of Federal funds.

Engineer of Design and Environment Michael L. Hine

Illinois Department of Transportation
2300 South Dirksen Parkway / Springfield, Illinois / 62764

BDE PROCEDURE MEMORANDUM

NUMBER: 5-00

SUBJECT: Value Engineering Program

DATE: April 3, 2000

This memorandum supersedes and replaces BDE Procedure Memorandum 99-33, dated May 1, 1999.

Background

Under 23 CFR, Part 627, the FHWA requires a program be established to improve project quality, reduce project costs, foster innovations, eliminate unnecessary and costly design elements, and to ensure efficient investments through the use of Value Engineering (VE).

Applicability

The procedures in this memorandum are applicable to all highway projects on the National Highway System (NHS) with an estimated cost of $25 million or more.

Definitions

Highway Project - Projects with an estimated cost of $25 million or more and which are studied and documented in a single Phase I report. Such projects may encompass multiple construction contracts.

Value Engineering (VE) - The systematic application of recognized techniques by a multi-disciplinary team to identify the function of a product or service, establish a worth for that function, generate alternatives through the use of creative thinking, and provide the needed functions to accomplish the original purpose of the project, reliably and at the lowest life-cycle cost without sacrificing safety, necessary quality, and environmental attributes of the project.

Procedures

(a) **Project Selection**. Each district identifies applicable projects during the preparation of the multi-year program. Due to the complexity and scope of large projects, more than one VE study may be desirable. Other projects not meeting the definition may be selected for this program.

(b) **Project Cost.** Costs associated with environmental studies, preliminary engineering, final design, land acquisition and construction should be used in determining the selected project's cost. The project cost includes state, local agency, and Federal-aid highway funds.

(c) **Scope of Studies**.

(1) Initiation of VE Study. Schedule VE studies in such a manner so as not to cause delay of the project. For a Phase I report with multiple construction contracts, develop a plan for conducting the VE study(s) based on the Phase I considerations and the nature and complexity of the work type, (e.g., One VE study may cover alike construction projects.) A single VE study should cover as many construction contracts under the single Phase I report as practicable and beneficial. Initiate the VE study no later than the time the construction plans are 50% complete and to allow for the implementation of the recommendations without delaying the project.

(2) Team Makeup. The VE team, selected by the district, consists of individuals not personally involved in the design of the project. The team leader should have attended the NHI course on Value Engineering or have equivalent experience in the preparation of VE studies. When making up the team take into account the following:

- Draw team members from either the district or central office;
- Consider individuals from specialty areas depending on the project scope;
- Assign personnel from construction, maintenance, and studies and plans (as applicable);
- Include representatives from environment, operations, and land acquisition as necessary;
  and
- Include individuals from the public and other agencies when in the public interest.

Qualified consultants may be retained to conduct VE studies provided the consultant has not worked on the subject project.

(3) Process. To best accomplish the goals of Value Engineering, the districts have considerable latitude in determining the type, size, and complexity of a VE study. Value engineering studies should follow widely recognized problem solving principles.

(4) Final Report. Each Study concludes with a formal VE report which outlines the decisions and recommendations and is presented to the district engineer or his/her representative. Each district establishes a procedure for prompt review and implementation of the approved recommendations. When any recommendation is a major change to an approved Design Report or is a design exception to policy, the

recommended change is coordinated through the appropriate central bureau.

(5) Monitoring. Each district appoints a VE coordinator who is knowledgeable in VE studies. The VE coordinator's responsibilities include monitoring each VE study from initiation through the final report, reviewing the report, and assisting in the implementation of the findings. During the month of October, each year, the district VE coordinator sends the Bureau of Design and Environment's VE coordinator a list which itemizes the total number of VE studies conducted over the past year and the estimated cost savings for each study. BDE will summarize the information and forward it to the FHWA.

Engineer of Design & Environment Michael L. Hine

Illinois Department of Transportation
2300 South Dirksen Parkway / Springfield, Illinois / 62764

BDE PROCEDURE MEMORANDUM

NUMBER: 6-00

SUBJECT: Local Participation in Spot Safety Improvement Projects

DATE: April 3, 2000

This memorandum supersedes and replaces Design Memorandum 87-6, dated April 15, 1987.

To insure that all municipalities are treated equitably, all spot safety improvement projects which involve joint participation by the department and a local agency shall be programmed for Federal-aid participation.

In the event that Federal funds are not available to fund all projects at the time of the letting, selected projects shall be deferred until Federal funds become available.

To determine which projects should be deferred, the Engineer of Project Development and Implementation shall coordinate with the Engineer of Traffic Operations in the Bureau of Operations to establish an appropriate priority list.

Engineer of Design and Environment Michael L. Hine

Illinois Department of Transportation
2300 South Dirksen Parkway / Springfield, Illinois / 62764

BDE PROCEDURE MEMORANDUM

NUMBER: 8-00

SUBJECT: Federal Participation in Stockpiling of Salvage Materials

DATE: April 3, 2000

This memorandum supersedes and replaces Design Memorandum 87-26, dated April 15, 1987.

The purpose of this memorandum is to set forth guidelines for determining the extent of Federal participation allowed in the cost of salvaging and stockpiling materials which cannot be reused in the project. This does not apply to material salvaged from Bituminous Surface Removal or Texturing Existing Pavement which becomes the property of the Contractor for future recycling. The material should be stockpiled either on the project limits or at a State-owned storage site a reasonable distance off the project limits if necessary to prevent a potential roadside safety problem. The amount of participation will be limited to the following:

1. If the material can be utilized on other Federal-aid routes, participation may be obtained for stockpiling the material.

2. If the material is to be retained by the Contractor, participation may be obtained for salvaging the material provided the Special Provisions indicate that the salvage value is to be reflected in the Contractor's bid price.

3. If the material can be utilized on non-Federal-aid routes, Federal participation for stockpiling will ordinarily be limited to the dollar amount established by an alternate bid item for Contractor disposal.

4. If the material has no use, participation will be allowed for the disposal of the material as specified in Article 202.03 of the Standard Specifications.

Engineer of Design and Environment Michael L. Hine

Illinois Department of Transportation
2300 South Dirksen Parkway / Springfield, Illinois / 62764

BDE PROCEDURE MEMORANDUM

NUMBER: 9-00

SUBJECT: Surplus Excavation Disposal

DATE: April 3, 2000

This memorandum supersedes and replaces BDE Procedure Memorandum 97-27, dated March 25, 1997.

Applicability

This information is applicable to all state highway projects.

Procedures

The purpose of this memorandum is to set forth guidelines for designers to show areas on the plans where the Contractor may waste suitable excess excavation.

Article 202.03 of the Standard Specifications directs the Contractor to dispose of excess waste material which results from the construction operations. The Contractor is directed to dispose of it off of the project right-of-way unless permission is received from the Engineer to place it within the project limits. Since the Contractor has some uncertainty as to whether s/he will be able to place this material within the right-of-way a higher bid may result. In many cases it is acceptable to waste this material on the right-of-way when the placement will not adversely affect environmentally sensitive areas, safety, drainage or aesthetics. When the designer knows that the construction operations will result in excess excavation s/he should attempt to find locations within the project limits to place this material.

Factors to be considered in selecting locations include:

- Environmental: The area should not contain wetlands or other environmentally sensitive areas.

- Drainage: The designer should be certain that drainage will not be adversely affected by any excavation placed on the project.

- Safety: The wasted material should not create sight distance problems or mounds which could affect a vehicle which has left the roadway.

Areas where it may be permissible to waste this material include flattening front slopes, filling in depressions, interchange infields, and in general the area between the top of the back slope and the R.O.W.

The designer should show the areas where the Contractor can waste material on the plans and include a schedule showing Station to Station, offset, thickness allowed and quantity of material which can be wasted. The designer should also include the quantity of material which will still need to be wasted off of the project.

Engineer of Design and Environment Michael L. Hine

Illinois Department of Transportation
2300 South Dirksen Parkway / Springfield, Illinois / 62764

BDE PROCEDURE MEMORANDUM

NUMBER: 15-02

SUBJECT: Procedures to Minimize Motorists' Costs and Inconvenience

DATE: April 19, 2002

This memorandum supersedes BDE Procedure Memorandum 15-00 dated April 3, 2000. Item number 2 under Procedures has been revised.

Background

The following procedures promote increased use of measures to reduce delays and inconvenience for motorists during highway construction. The primary focus is on projects involving high volumes of traffic or severe impacts on businesses, however, some of the measures also are applicable to other types of projects. If used effectively, these measures will allow the Department to complete projects in a timely manner to meet the demands of increasing traffic and congestion while minimizing disruptions to the traveling public.

Applicability

The following procedures are applicable to construction or reconstruction projects on the state highway system, effective immediately.

Procedures

1. Additional Shoulder Thickness

   All new construction or reconstruction projects on the state system which involve the construction of new shoulders shall meet the guidelines described below. The additional shoulder thickness is intended to allow the shoulders to be used to carry traffic during current and future construction improvements.

   - 2-lane major principal arterials – These highways should normally have 8 foot to 10 foot paved shoulders. These shoulders could be used to carry traffic when needed. When the 20-year projected traffic exceeds 2000 multiple unit trucks (MU) per day or 10,000 Average Daily Traffic (ADT) the shoulders shall be constructed to the same thickness as the pavement. The 2000 MU threshold is based on the traffic that would require a shoulder thickness greater than 200mm (8 inches) to handle the occasional load.

- 4-lane highways – When the 20-year projected traffic exceeds 3000 MU's per day or 25,000 ADT, shoulders shall be built to the same thickness as the adjoining pavement. The MU threshold is based on the traffic that would require thicker pavement to carry the load. While the inside shoulder is only 1.8m (6 feet) wide and would not normally be used as a lane, it will still allow traffic to be shifted away from the closed lane for patching and paving operations. At locations where the 20 year projected ADT is less than 25,000 the traffic should be examined at peak times. If the expected one-way Vehicles Per Hour (VPH) exceeds 1700 the shoulder thickness shall be the same thickness as that of the pavement. When it is anticipated that the shoulders will be used for an extended period of time (more than 3 years) during the design life of the pavement, the shoulders shall be designed to pavement standards, utilizing the same pavement design, details and materials as the mainline pavement.

- Highways of 6 or more lanes – Build all shoulders as pavement, utilizing the same pavement design, details and materials as the mainline pavement. This will allow for keeping at least two, and in some cases, three lanes open at all times, as warranted by the high ADT on these types of highways.

2. <u>Pavement and Shoulder Resurfacing</u>

To improve the flow of traffic and safety in work zones the following resurfacing policy has been developed.

On all four lane interstates and other freeways, all four lane expressways, other four lane highways where the ADT exceeds 25,000 or peak one-way VPH exceeds 1700, and two lane highways where the ADT exceeds 10,000 or peak one-way VPH exceeds 800, and where significant traffic delays are expected the sequence of resurfacing operations shall satisfy the following requirements:

(a) Before paving in a lane, the adjacent lane and its shoulder must be at the same elevation.

(b) Each lift of resurfacing shall be completed, including shoulders, before the next lift is begun.

(c) Elevation differences between lanes shall be eliminated within twelve calendar days.

When the above criteria are met, a special provision shall be included to implement this requirement.

On all roadways with more than four lanes the sequence of resurfacing operations or staging plans shall be included in a special provision or on the plans.

The contractor's sequence of operations should be discussed at the pre-construction conference.

3. Expanded Use of Lane Rental Contracts

Lane rental is a contracting technique whereby either the contractor bids the number of days of work requiring lane closures as part of the contract, or the Department sets the number of days for which such closures are allowed. If the contractor finishes early, an incentive is paid. If the contractor exceeds the number of days allowed, a disincentive payment is deducted from the contract for each day the limit is exceeded. This type of contract forces the contractor to schedule resources and perform work in a more timely manner.

Contracts utilizing a lane rental specification should be considered on all high volume, multi-lane projects, such as interstates and expressways. A traffic capacity analysis for these projects should be completed to determine the level-of-service to be anticipated during construction. In addition, these projects shall have a queuing analysis completed to determine the anticipated traffic backups at different times during the day and week. Once a traffic capacity analysis and queuing analysis are complete a decision may be made on whether or not to use a lane rental specification. If a lane rental specification is used, this information will aid in determining the average road user benefit cost.

All interstate and expressway projects which involve patching shall include lane rental specifications. The lane rental specification must apply to the patching operation and may be applied to the whole project. A traffic capacity analysis and queuing analysis shall be prepared to determine the anticipated back-ups at different times during the day and week. This information is then used in determining the average road user benefit cost for purposes of developing the Lane Rental Specification.

4. Increased Use of Completion Date Contracts

As traffic volumes increase, so do the impacts to the motoring public and businesses during construction. To lessen these impacts, the use of Completion Date Contracts is encouraged as well as the use of Incentive/Disincentive specifications.

Completion Date Contracts and Completion Date Contracts with Incentive/Disincentive provisions shall be:

- Used on all multi-lane roadway projects with more than 25, 000 ADT.

- Used on all routes in urban areas where construction has the potential to severely impact the adjacent businesses.

- Considered on projects where there is a need to control the completion of the project. Projects where completion is anticipated in the fall of the year may require a completion date to help ensure the work is completed and does not extend over the winter period. Large projects which will be let in multiple contracts should contain provisions to keep the overall project on schedule. Completion dates shall also be used to avoid conflicts with special events.

Chapter 66 of the BDE Manual contains additional guidelines and instructions on the use of Completion Date Contracts and Incentive/Disincentive clauses.

5. Consolidation of Projects

During the annual and multi-year programming process and as Phase I work is initiated, future construction work on interstates and other highways on the principal arterial system shall be closely examined. Short sections of work, in close proximity to each other, and planned for completion over several years should be combined into one or more larger projects. To the extent possible, projects shall be scheduled so that they are completed in one construction season. Completion date and/or lane rental specifications should also be included when required. Smaller projects including shoulder work and patching shall be combined into single projects.

Every effort should be made to schedule and/or consolidate projects to provide more years of construction-free driving. This procedure is not intended to create “mega” projects, but to program work more effectively. Large projects should not all be let on the same letting, but it may be beneficial to let projects in the same area on consecutive lettings so work is completed during the same time period.

6. Prohibit Weekend Lane Closures

On roadways with ADT of 25,000 or more all lanes shall be open to traffic from 3:00 P.M. Friday to 12:00 midnight Sunday except where structure construction, or major rehabilitation makes it impractical. When patching and resurfacing are performed on these routes, lane closures are often in place and cause extensive backups. By restricting the work on weekends, all traffic lanes are available to accommodate the higher weekend volumes of traffic. Where the ADT exceeds 25,000 the construction plans shall contain the ADT on the cover sheet.

A traffic capacity analysis and a queuing analysis should still be completed. On some routes ADT’s may be lower on weekends and it would be beneficial to allow or require work on weekends. In these cases contracts should contain specification to allow such work.

Projects with less than 25,000 ADT on which traffic volumes are still relatively high, especially interstates, shall also have a traffic capacity analysis and a queuing analysis completed to evaluate the possible benefit of prohibiting weekend lane closures.

7. Additional Signage/Public Notification

On interstates, expressways and other high volume routes where traffic delays are anticipated during construction additional signage will be needed and efforts to notify the public shall be included.

a. Coordination. Coordinate work with local agencies, other districts, other states, other agencies, and with other contracts within the district to ensure alternate routes and detour routes will be free of construction during their use.

b. Advance Publicity. Provide advance publicity of all forthcoming interstate projects. This not only applies to large urban projects but also to smaller city and rural projects. Diversion of a portion of local commuter traffic will help even in rural areas. Advance publicity also can be valuable in other projects which have high impact/visibility to a community or to a travel corridor.

c. Preconstruction Signing. If practical, place changeable message signs in advance of construction projects on interstates and other high volume routes at least two weeks prior to work beginning. These signs will be used to alert motorists of the impending work, when it will start, expected delays, or other appropriate information that may encourage motorists to find alternative routes. Also, use newspapers, radio, and television to alert motorists of upcoming work.

d. Construction Signing. Erect changeable message signs during construction at appropriate exits in advance of lane closures to advise motorists when and where delays are expected. Provide alternative routing suggestions where a good alternative is available and significant delays are expected. Changeable message signs may need to be located before the closest exit if the best alternative route to avoid the delays is at a more distant exit. Fixed signs may also be necessary on the mainline to help convey alternative routing information. Proper signing also must be provided along the alternative route.

e. Additional signing. On projects where long delays are expected or the use of alternative routes is anticipated additional signing farther from the projects shall be included. Signs should be placed far enough from the beginning of the project so that motorists are informed of the construction work and possible delays to better prepare them for delays and to allow motorists to consider the use of alternative routes.

8. Night/Non-Peak Hour Construction

On high volume roadways the Traffic Management Analysis (TMA) should consider limiting construction to non-peak or nighttime hours. All TMA's prepared for roadways with greater than 25,000 ADT shall include a traffic capacity analysis and a queuing analysis. When the one-way VPH exceeds 1700 or the level of service (LOS) drops to E or F excessive back-ups will occur. Under these situations work should be restricted to other times of the day.

Once the traffic peaks and expected queues have been reviewed, the Traffic Control Plan can be developed. Under the above situations construction should not be permitted during certain time periods for each direction of travel. This provides the contractor with some flexibility in scheduling work.

Under certain conditions it may be beneficial to require work be done only at night. This decision should be made after close examination of the Traffic Capacity Analysis and Queuing Analysis. In cases where the traffic volumes remain high throughout the day but drop significantly during the night, where traffic delays would be continuous throughout the day, or to provide longer continuous work periods night construction should be considered.

Before requiring night construction, consider the following factors:

- Noise level ordinances that may prohibit certain construction activities at certain times.
- Noise and light impacts on the surrounding community.
- Neighborhood traffic impacts due to detours or alternative routes.
- Impacts to businesses.
- Community resistance.

When night construction is required by the contract, include the following:

- A lighting specification detailing the minimum lighting requirements.
- Additional signing and increased use of changeable message signs to alert traffic.
- Increased Public Relations efforts to notify the surrounding community.
- Restrictions to limit work hours to 7:00 P.M. to 6:00 A.M. Hours may be adjusted according to the traffic analysis.

9. Lane Closure Meetings

Each district shall institute periodic lane closure meetings. These meetings shall be held with counties, municipalities, and other agencies (i.e. Toll Highway Authority, etc.) within the district's boundaries and those immediately adjacent to the district. Meetings shall also be held with adjoining districts and states which may be impacted by future projects.

A Letter of Understanding with adjoining states is required for all projects that abut the state line.

Meetings should address future roadway improvements for both the district and the other agency which involve lane closures, lane restriction, stage construction, or detours. All parties should work to program projects to minimize conflicts. The result of these meetings should allow all parties involved to schedule projects so that fewer conflicts exist for motorists and to ensure alternate routes and detour routes will be free of construction during their use.

Engineer of Design and Environment Michael L. Hine

Illinois Department of Transportation
2300 South Dirksen Parkway / Springfield, Illinois / 62764

BDE PROCEDURE MEMORANDUM

NUMBER: 16-00

SUBJECT: Quality Assurance/Quality Control Guidelines for Work By Consulting Engineers

DATE: April 3, 2000

This memorandum supersedes and replaces BDE Procedure Memorandum 95-17, dated February 1, 1995.

Background

The purpose of this memorandum is to establish guidelines to assist consulting engineering firms in preparing Quality Assurance/Quality Control (QA/QC) plans.

Applicability

The procedures in this memorandum are applicable to all engineering/architectural contracts with the department.

Procedures

An acceptable QA/QC plan is required for all engineering/architectural contracts. This includes district-wide, statewide and construction engineering projects.

QA/QC will be part of the negotiation process for each project. Discussions of the QA/QC procedures should begin at the scope of services meeting and the discussions could continue through the negotiating sessions. If an acceptable QA/QC plan cannot be developed by the selected consultant, steps will be taken to begin negotiations with the firm that was ranked second at the selection meeting.

Attached to this memorandum are the "Quality Assurance /Quality Control Guidelines for Work by Consulting Engineers", effective November 1, 1994.

Contact the Agreements Unit (BDE) at 217/782-3408 if there are questions concerning the guidelines.

Engineer of Design and Environment Michael L. Hine

Attachment

INTRODUCTION

The department for several years has been striving to improve the quality of the product delivered by the consultant industry. In general, firms used on IDOT work deliver a good product or service. There are instances where less than adequate performance has resulted in errors and/or delays. This has resulted in costs not only to the citizens of the state but to the firms involved in the project.

Many of the firms that demonstrate best performance for the department were using some form of quality assurance/quality control (QA/QC); therefore, in January 1992, the department instituted QA/QC for all IDOT work performed by consultants.

QA/QC will be part of the negotiation process for each project. Discussions of the QA/QC procedures should begin at the scope of services meeting and continue through the negotiation sessions. If an acceptable QA/QC plan cannot be developed by the selected consultant, the department will initiate negotiations with the firm that was ranked second at the selection meeting.

These guidelines have been developed to assist firms in preparing a QA/QC plan and to set forth concepts that may improve existing QA/QC plans.

DEFINITIONS

Calculations:

Written documentation of assumptions, analysis, and conclusions for design of an element of a project.

Checklist:

A list of things, names, etc., to be checked off or referred to for verifying, comparing, ordering, etc.

Communication:

Giving or exchanging of information, signals, or message as by talk, gestures, or writing. Communication is required throughout the process, is the responsibility of everyone, and must be open.

Compliance:

The act of following the stated quality assurance plan. An act of complying with a requirement, directive, etc.

Computations:

Written documentation of the figuring of quantities for a project.

Computer Program Verification:

Assurance that a computer program correctly performs the operations specified in a numerical model. Usually accomplished by comparing program results to (1) a hand calculation, (2) an analytical solution or approximation, (3) a verified program designed to perform the same type of analysis, or (4) a comparison with a test case provided by the vendor of the program.

Consultant:

The firm providing professional services as a party to a Standard Agreement (IDOT Standard Agreement Provisions for Consultant Services, 2000). An expert who is called on for professional or technical advice or opinions.

Corrective Action:

Measures taken to rectify conditions adverse to quality and, where necessary, to preclude repetition.

Department:

The Department of Transportation of the State of Illinois.

Design Control:

Requirement providing assurance that a design is defined, controlled, and verified.

Documentation:

Any written or pictorial information describing, defining, specifying, reporting, or certifying activities, requirements, procedures, or results.

Final Documents:

Approved document and approved changes thereto.

Performance:

The act of carrying out the stated objectives on a project.

Planning:

Those activities needed to assure that the correct people are performing the correct tasks using the correct tools in the correct sequence. The end product should be identified and kept in mind when performing planning activities to ensure that the end product contains the required quality.

Project Budget:

A comprehensive description of the costs associated with all the services required of the consultant, including labor costs, direct expenses, overhead costs, and profit.

Project Team:

The Department's and the Consultant's staff assigned to the project with specified duties and responsibilities, participating together in a cooperative manner.

Project Resources:

All things available to the project team to complete the project, including people, tools, information, equipment, etc.

Project Manager:

The individual assigned by the Consultant to act as the liaison between the consultant and the Department in matters relating to the achievement of project requirements, including budget control, schedules, milestones, and quality objectives.

Project Schedule:

A comprehensive description of all significant services required of the CONSULTANT and of all actions required of the DEPARTMENT and Approving Parties by the obligations of the AGREEMENT, together with the durations and/or dates for performing these services and actions.

Quality:

Meeting valid requirements so that the product produced is suitable for its intended use (quality in fact). Providing what is expected (quality in perception).

Quality Assurance:

All those planned and systematic actions necessary to provide adequate confidence that a structure, system, or component will perform satisfactorily in service. Also see attached.

Quality Assurance Manager:

The individual assigned by the Consultant to have full authority and responsibility for generating, updating, monitoring, and maintaining the quality assurance program, and responsibility for verifying conformance to the QA requirements as set forth by the Department and applicable codes and standards.

Quality Assurance Plan:

A document describing the implementation of the Quality Assurance Program on a specific project, including organizational responsibilities, applicable procedures, and other information required to address client (contractual) quality requirements. The plan may also address any unique contractual requirements or modifications.

Quality Assurance Procedures:

A quality assurance document that outlines a planned and systematic action for various quality affecting activities requiring quality control.

Quality Control: (See attached)

A system for maintaining desired standards in a product or process, especially by inspecting samples of the product.

QA Records:

A completed document that furnishes evidence of the quality of items or activities affecting quality. A record is an authentic, official copy (or original) of a document retained to attest to past decisions, actions, or events.

Scope of Services:

All the actions required of the consultant to complete the obligations for the project.

Training:

In-depth instruction provided to personnel to develop and demonstrate initial proficiency in the application of selected requirements, methods, and procedures, and to adapt to changes in technology, methods, or job responsibilities.

Valid Requirements:

Those requirements established so that the resulting product will satisfy the customer's expectations on schedule and within planned resources.

Verification:

The act of reviewing, inspecting, testing, checking, auditing, or otherwise determining (and documenting) whether items, processes, services, or documents conform to specified requirements. Assuring that the project team is doing the right thing and that the work being performed (or that has been performed) is performed correctly.

ELEMENTS OF A QA/QC PLAN

I. PROJECT TEAM

This section should include a list of key personnel from in-house staff, outside consultants and client liaison. A typical project team should include:

- Project Manager
- Client Liaison
- Technical Support Staff
- Outside Consultants
- QA/QC Reviewer

This section should also include a brief description of the key members' responsibilities.

II. WRITTEN PROJECT PLAN

A. PROJECT SCOPE

This section should include a brief description of the project and the purpose and need for the project. The matter of possible future expansion of the facilities should be considered and addressed. Will the project be done in English or metric units? Will the project include more than one contract (i.e. two or more sections)? For the majority of projects there will be a single contract. Anything significantly different for this project should be noted in this section.

B. SUBCONSULTANT'S ROLE

All subconsultants should be listed and identified. The scope of work each is responsible for should be clearly delineated. The subconsultants' key project personnel and telephone numbers should be listed. All deliverables with time frames need to be identified. These deliverables can be from the subconsultant to the consultant and in certain instances vice versa.

C. STANDARDS AND GUIDELINES

All appropriate manuals and memorandums applicable to the project should be listed.

D. TIME SCHEDULE

This section should be developed with a considerable amount of thought. The success of the project can often hinge on the time schedule.

The schedule should include the estimated agreement date, start-up meeting date and periodic milestones. The number of milestones will likely vary considerably depending on the size and type of project. It is important that these not be minimized.

Deliverables with dates for submittals to various parties to the agreement should be established. Reasonable float time and review time should be incorporated in the overall schedule.

In-house quality assurance reviews should be scheduled in accordance with the various milestones and deliverables. These should be scheduled several times during the project rather than as a final, comprehensive check.

Report phase milestones and preliminary submittal date needs to be scheduled. Startup date for preliminary design along with milestones and submittal date to IDOT should be listed.

Periodic meetings with IDOT will be required. These should be identified up-front and be coordinated with the various deliverables and the review thereof. It is recognized that these may change at various times due to circumstances. The entire Time Schedule is a dynamic schedule and may be reviewed and adjusted periodically.

Starting date for final design along with any overlap with the preliminary design needs to be identified. Periodic milestones during this stage should be listed.

E. MANHOUR BUDGET

A manhour budget should be prepared by classification and broken down by work tasks. It is advisable that percent of total budget expected to be expended at various milestones be determined. This should assist the consultant in monitoring progress and assist in providing early alerts if there is a problem with the budget.

F. RESOURCE MATERIAL

This section should consist of a listing of pertinent information available for the project including items such as:

- Existing drawings
- Previous reports
- Soil borings
- TS&L
- Boundary surveys
- Easements

G. ESTIMATED CONSTRUCTION BUDGET

This section should note the anticipated total construction cost. It is important this cost be kept in mind because if during the course of design the consultant has reason to believe the cost will be greater he should so advise IDOT. The goal is to avoid unpleasant surprises further down the road.

Cost limitations by segment, where applicable, need to be identified and listed.

H. SPECIAL CONDITIONS

If the project has any special requirements, they should be set forth in this section. Special construction materials are sometimes required for a project and if so should be noted.

III. PROJECT CONTROL

A. PROCEDURES

Procedures for quality control are often in the form of check lists. The procedures are intended to assure completeness of the function and conformance of the project.

1. Engineering and Environmental Studies/Plan Preparation

a. Scoping/Field Checks

This procedure should itemize basic elements to be reviewed and evaluated during the initial field inspection of a project. The basic elements should include, but are not limited to, inspection of pavement condition, logical termini, drainage problems, hazards, existing guardrail condition, handicap accessibility, evidence of wells, gas pumps or storage tanks, and other environmental considerations.

b. Contents of Submittals

This procedure should provide a consistent definition of the content of the various key submittals.

1. Preliminary Reports
2. Prefinal Reports
3. Final Reports
4. Preliminary Plans
5. Prefinal Plans
6. Final Plans

c. Special Provision Preparation

This procedure should define the proper preparation of a contract special provision and provide a procedural method to assure a clearinghouse for unnecessary special provisions.

2. Design Calculations

a. Quantity Calculations

b. Checking Calculations

3. Computer Inputs/Outputs

This procedure should define the software applications and the process for verifying results.

4. Documentation of directives. Meeting minutes and telephone communications

This procedure should provide guidelines for consistent documentation of project decisions and directives.

5. Dissemination of correspondence and documents

This procedure should provide guidelines for consistent dissemination of project decisions and directives.

B. PROJECT RECORDS

The intent of this section is to specify the requirements for the preparation and maintenance of project records generated by the Project Team. The key features of these requirements are summarized as follows:

- Records are legible, identifiable and retrievable,
- Records are protected from damage or loss, and
- Responsibilities for routing, maintaining, accessing, transferring, and long-term storage are specified.

Project records generated during project work activities may include, but are not limited to: informational records, field records, data compilation and testing records, data interpretation records, calculation and computer records, telephone messages, and draft and final reports.

The Department expects that quality records will be maintained to demonstrate achievement of the required quality and that the QA/QC plan is being followed. Pertinent subconsultant quality records should be an element of these records.

Where agreed contractually, quality records shall be made available for review by the Department for an agreed period.

COMPLIANCE STATEMENTS

All agreements will contain language that requires "statements of compliance" with the QA/QC plan that was prepared by the consultant and approved by the department.

Statements of compliance are required on an interim basis and at the conclusion of the work.

The interim statements of compliance would be required throughout the project at each major milestone. For example, a statement of compliance would be made for a typical contract plans project at the preliminary plans, pre-final plans and tracings/final documents stages. The interim statements of compliance would be satisfied with a sentence added to the consultant's letter of transmittal which states that the plans were prepared in compliance with the approved QA/QC plan.

The final statement of compliance will be on the department's form (see Attachment A).

VERIFICATION PROCESS

The department will review selected projects to verify that the consultant's plan as approved by the department has been followed.

Selection of jobs to be reviewed will consider type of work, size of project, district or central bureau, and level of performance so that the results of the review will be meaningful.

The review will be conducted at the consultant's office. Participants would include, but not be limited to, the consultant's project manager, consultant's QA/QC manager, district/central office project manager and representatives from the department's central bureaus.

Generally, the review would be one-half day and would occur prior to completing the work. The firm being reviewed would be furnished questions and/or statements to assist in preparation for the review meeting. The review meeting would begin with a brief overview of the QA/QC plan by the consultant. The department's review team would then proceed through the questions/statements previously furnished to the consultant.

A report will be prepared by the review team and a copy will be furnished to the consultant.

The purpose of the verification process is not limited to determining if the QA/QC plan is being followed. An important outcome of the process will be to find innovative ideas that can be shared with others and to identify areas that could be modified to improve quality.

The districts or central bureaus may conduct their own verifications in addition to the formalized process described above.

In the event of non-compliance with the QA/QC plan, certain actions by the department may occur but it is essential that the consultant demonstrate to the department that corrective action has been taken to assure future compliance. The agreements will state that non-compliance could result in termination of the contract and/or have an affect on the firm's prequalification status. Non-compliance that leads to less than satisfactory performance would be a consideration in the selection of firms for work in the future.

Illinois Department of Transportation

Affidavit of Completion

Route _____

Section _____

County _____

Job No. _____

Firm Name _____

PTB No. _____

State of _____

County of _____

Affidavit

The undersigned, having completed the professional services required by its Agreement, dated _____ , with the State of Illinois and any subsequent agreed modifications thereto, on the above Route(s) and Section(s), being duly sworn on oath, says that all sums of money due to its employees, subcontractors or suppliers for any labor, material (including freight and demurrage charges), apparatus, fixtures, or equipment used in performing such services and all damages, direct or indirect, suffered or claimed on account of such services, have been paid except for the _____ from whom the attached consents(s) to such final payment have been obtained.

To the best of my / our knowledge, information and belief, the professional services were performed in compliance with the Quality Control / Quality Assurance Plan approved by the Department.

_____

By _____

Subscribed and sworn to before me this _____ day of _____ .

(SEAL)

_____

My commission expires _____

ATTACHMENT A

Illinois Department of Transportation
2300 South Dirksen Parkway / Springfield, Illinois / 62764

BDE PROCEDURE MEMORANDUM

NUMBER: 17-04B

SUBJECT: Architectural and Engineering Report and Negotiation Guidelines for Engineering Agreements and Supplements

DATE: December 1, 2004

This memorandum supersedes and replaces BDE Procedure Memorandum 17-04A dated June 30, 2004. This memorandum is being issued to transmit changes in the attached "Architectural and Engineering Report and Negotiation Guidelines for Engineering Agreements and Supplements" to make them conform to ISO 9001 requirements.

Background

The purpose of this memorandum is to provide guidelines for the districts to conduct negotiations with consulting firms.

Applicability

The districts will be responsible for the negotiating meetings leading to agreement execution for all Division of Highways agreements except the few agreements which are statewide in scope.

Procedures

The department schedules the time, date and location of the negotiation meeting, along with the project description in the Professional Transportation Bulletin. When the Agreements Unit notifies the firm of their selection, they are reminded of the scheduled meeting date. The firm is also notified that if there is a conflict with the meeting date they should contact the district. Also, the Consultant is informed at this time to send into the Agreements Unit the current payroll rates by classification and employee name of the Consultant's transportation staff and any subconsultants, and all potential direct cost information.

The district will inform the Consultant that the current Standard Agreement Provisions for Consultant Services and all forms are available on the department's internet site.

Attached to this memorandum is "Architectural and Engineering Report and Negotiation Guidelines for Engineering Agreements and Supplements." It is essential that the instructions and guidelines contained in this attachment be followed and that the report be fully completed and sent to the Agreements Unit with the proposal package for <u>all prime and supplemental agreements.</u>

Items 3, 4, 5, 6 & 7 may be skipped for supplemental agreements. The Consultant must submit to the department current payroll rates for their staff and any subconsultant for supplemental agreements. Failure to do this will cause the department to use old rates on file.

The Agreements Unit will use this report and process the agreement for signature in the usual manner. The attachment may be duplicated as needed for each use.

Engineer of Design and Environment Michael L Hinz

Attachment

Illinois Department of Transportation
2300 South Dirksen Parkway / Springfield, Illinois / 62764

ARCHITECTURAL AND ENGINEERING REPORT AND NEGOTIATION GUIDELINES FOR ENGINEERING AGREEMENTS AND SUPPLEMENTS

Project Information:
Consultant _____
IDHR # _____
Phase _____
Route _____
Project No _____
Section _____
County _____
Job No._____
PTB #_____
Complexity Factor (R) _____

Consultant Information:
Contact Person _____
Phone Number _____
Fax Number _____
E-Mail Address _____
Overnight Carrier _____
_____
Meeting Date(s) _____

The memorandum transmitting this Report should state the district's approval of man-hours, percent of participation, direct cost, and Quality Assurance Plan. An explanation and justification must be given if the negotiated fee is over 10% of the original estimate given to the Selection Committee for a Prime Agreement (Phase I or Phase II of a two-phase Agreement). A completed Consultant Agreement Approval Sheet (CAAS) must also be provided. Additionally, justification and explanation must be given in the CAAS for all supplemental agreements.

Within 3 to 5 business days of the initial negotiation meeting with the district, the consultant has submitted the following to the BDE (by fax or e-mail):

CONSULTANT

- ☐ Payroll by employee name & classification
- ☐ Direct Costs

SUBCONSULTANT(S)

- ☐ Payroll by employee name & classification
- ☐ Direct Costs

Three copies of the items shown below shall be submitted to the Agreements Unit in the Bureau of Design and Environment after negotiations for any prime or supplemental agreement are completed and accepted by the district.

- ☐ District's independent man-hour and direct cost estimate
- ☐ Draft scope of services with bar chart/schedule (previously e-mailed by district to BDE)
- ☐ A/E Report & Negotiation Guidelines for Engineering Agreements & Supplements (BDE 17-04B)
- ☐ Minutes of negotiation meeting(s) and attendance roster(s)
- ☐ Cost Estimate of Consulting Services (CECS)

- ☐ Itemized breakdown of direct costs (must match those previously e-mailed by consultant to BDE)
- ☐ Average hourly rates for each item and overall (classification titles must match those previously e-mailed by consultant to BDE) (BDE 2392)
- ☐ Approved QC/QA or Revised QC/QA
- ☐ Consultant Employee Utilization Form (for Prime Agreements only) (BDE 2350)
- ☐ EEO/AA/Title VI Section Form (for Prime Agreements only) (PM 1981)
- ☐ District Consultant Scoping and Negotiation Check Sheet

The Consultant proposes to utilize the following subconsultant(s). The necessary copies of the above items should also be included in the proposal package for any subconsultant.

_____ _____

_____ _____

_____ _____

_____ _____

_____ _____

1. Circulate an Attendance Roster showing names, affiliation, and title.

2. Assign the responsibility of preparing the meeting minutes to the Consultant.

(ITEMS 3-7 MAY BE SKIPPED FOR SUPPLEMENTAL AGREEMENTS)

3. Discuss with the Consultant the Non-Discrimination and EEO provisions in Sections 2.64 and 2.65 of the Standard Agreement Provisions for Consultant Services (SAPCS). Has the Consultant read Sections 2.64 and 2.65 of the SAPCS? ☐ yes or ☐ no. If not, have them do so. Do they agree to comply with the letter and spirit of these provisions? ☐ yes or ☐ no.

4. Review and discuss the forms prepared by the Consultant showing employee utilization (Consultant's Employee Utilization Form) and EEO/AA Form (PM 1981). Have the Consultant include details on EEO in the minutes, such as: hiring and number of additional personnel and their classifications.

5. Is minority and female employee utilization proposed for this project as high proportionally as it is in the overall staff of the firm? ☐ yes or ☐ no

   If not as high, discuss _____

6. Attach a completed copy of the "Consultant's Employee Utilization Form" (available on the IDOT website @ www.dot.state.il.us). The District's recommendation on the acceptability of the Consultant's minority and female employee utilization posture as set out in the attached Form and the reason(s) for the recommendation are as follows:

   _____

   If the recommendation is "posture unacceptable", include in the above the Consultant's reaction toward revising the proposed staffing plan.

7. Does the Consultant have any questions on Sections 1 and 2 of the SAPCS? If you are unable to answer any of the questions, list them here for Central Office response.

_____

8. The amount of explanation needed is dependent on the Consultant's past experience with the department. Indicate an "X" in the appropriate box, by the items which you discussed with the Consultant in the meeting:

Section 2.13 – Quality Assurance.

☐

Notify the Consultant if contract is Limited/No Review.

Review the Consultant's Quality Control and Quality Assurance Plan (QC/QA).

The QC/QA must be reviewed and approved by the district.

Tell the Consultant that the QC/QA can be modified ONLY by written acceptance of the District Chief Engineer.

Tell the Consultant hours for QC/QA should be broken out in cost estimate and invoice when billed.

The QC/QA should be reviewed during supplemental agreement negotiations and modified if applicable. Attached is a copy of the approved/revised QC/QA to this report.

Phase I and II Only

The Consultant will be required to certify compliance with the approved QC/QA plan. The certification must be sent to the district at each milestone submittal (preliminary plans, draft reports, soil report, drainage study, etc.).

The certification can be in a form of an additional statement in the transmittal letter when submitting the preliminary plans or draft report to the department. Final certification shall be on the form prescribed by the department.

Phase III Only

The consultant will be required to certify compliance with the approved QC/QA plan. The certification must be sent to the district at the 50% and 99% of the construction contract completion in conjunction with normal documentation reviews.

The certification can be in a form of an additional statement in the transmittal letter to the department. Final certification shall be on the form prescribed by the department.

Section 2.21 – Completion Date.

☐

Phase I and II Only

The anticipated date of completion and overall review time must be determined and discussed. Explain that the purpose of the completion date is to establish a basis for possible renegotiation of remaining fee if the department delays the project due to "no fault of Consultant". The agreed anticipated date of completion is _____, based upon a starting date of _____.

The department's review times are as follows:

- 30-45 Calendar days if letting is scheduled within 6 months.
- 45-60 Calendar days if letting is scheduled within the 5-year program.
- 90 Calendar days if the letting is NOT scheduled within the 5 year program.

Phase III Only

The tentative letting date is _____, the estimated start date is _____, and the estimated completion date is _____based upon the tentative construction schedule. The estimated construction cost is $_____.

Discuss with the Consultant if the district will request the use of a Start-Up Agreement (**State Funds ONLY**). ☐ yes or ☐ no. If yes, emphasize the use of a Start-Up Agreement will not be approved unless the prime Consultant's and all subconsultant's payroll rate/classification and direct cost information has been approved. Discuss with the Consultant that the authorization date of the Start-up agreement will be the Start date for the project and should be used for escalations and extensions.

Supplemental Agreements:
Starting Date for work on this supplemental agreement _____
Completion date for the work on this supplemental agreement _____
Will the proposed supplemental agreement change the project schedule? ☐ yes ☐ no.
If yes, the agreed anticipated completion date for the project is _____.

Section 2.24 – Subconsulted Work.

☐

Point out that any firm to be used for subconsulted work must be prequalified and approved by the department. A draft of the subconsultant agreement must be reviewed and approved prior to execution and authorization of the work. The department will not have to review the draft agreement if the Consultant is planning to use the standard subconsultant agreement available on the IDOT website.

Section 2.26 – Accuracy of Work.

☐

Point out that the Standard Agreement Provisions of Consultant Services stipulates the following relative to errors, omissions, and/or negligent acts.

The Consultant shall be responsible for the accuracy of the work and shall promptly make necessary revisions or corrections resulting from his/her errors, omissions, or negligent acts without additional compensation.

The Consultant shall respond to the department's notice of any errors and/or omissions within 24 hours. Notification shall be by telephone, followed by Certified Mail. The Consultant may be required to visit the project site if directed by the department.

The Consultant may be required when making their corrections to send personnel to the appropriate office (District or Central Bureau).

The Consultant shall be responsible for any damages incurred as a result of his/her errors, omissions and/or negligent acts and for any losses or costs to repair or remedy construction incurred as a result of his/her errors, omissions, and/or negligent acts according to the Department's Policy on consultant errors and omissions.

The Consultant should be aware the department will not check such items as end areas on cross sections, detailed dimensions, and calculations except on a random basis.

Section 2.27 – Publications.

☐

Does the Consultant have all BDE Procedural Memoranda and Informational Memoranda and has the Consultant been receiving the new series of BDE Memoranda? The District should contact the Policy and Procedures Section in the Bureau of Design and Environment to make arrangements for a Consultant to receive a set of memoranda if the firm needs a current set.

The BDE Procedure and Informational Memoranda have been furnished by the District. (PE I only)

Phase III Only
Does the consultant also have all Construction Memoranda?

The District should contact the Bureau of Construction to make arrangements for a consultant to receive a set of the memoranda if the firm needs a current set.

Section 2.29 – Revision of Work.

☐

Departmental approval is required prior to doing the work. The agreement will provide the basis of payment and authorization of additional work.

Section 2.69 – Additional Compensation.

☐

Emphasize the importance of the provisions of this Section which require the Consultant to notify the department before they begin work for which they propose to claim an additional fee.

Section 2.81 – Partial Payments/Invoices.

☐

Inform the Consultant that their work progress will be monitored and that, if at any time their billing costs on an actual cost agreement exceeds the upper limit of compensation multiplied by the approved percentage of completion shown on the progress reports, the firm's total partial payments shall be limited to this amount. The Liaison Engineer will confer promptly with the Consultant to rectify the costs over running the progress of work.

Inform the Consultant that invoices are available on the department's Internet site. Discuss which form should be used and how it should be filled out. Discuss the backup information that the Consultant will be required to submit with the invoice.

Section 2.85 – Adjustments to Compensation.

☐

For an actual cost agreement with a duration of 18 months or less, the Consultant should review the work completed at 50%, 75%, and 90% of the upper limit of compensation and furnish the department the cost of services still remaining. If the cost of services still remaining at the 75% and 90% completed exceed the upper limit, the Consultant shall immediately notify the department.

When duration of an actual cost agreement exceeds 18 months, the Consultant shall review the work accomplished and make an itemized estimate showing the cost incurred and cost of the services still required to complete their obligation on a quarterly basis and the result of the review shall be submitted to the department 25 days following March 31, June 30, September 30 and December 31 of each calendar year. In addition, the Consultant shall make such a review and submit said report when the cost incurred approaches 90% of the upper limit of compensation.

Section 2.86b(3) – Reimbursements.

☐

Salaries of principals and other salaried personnel: When work is to be performed by a principal or another employee which is normally performed by lower rated employees, the estimates and billings must be based on reasonable hourly rates as would be paid to employees hired to perform the specific task in question.

The maximum total compensation for partners, principals and employees is $60.00 per hour ($124,800 annually) that may be charged directly to the contract. Compensation that may be charged indirectly to the overhead is subject to the cost criteria of the Federal Acquisition Regulations less direct compensation.

9. Be sure the firm's name, address and the project description on page 1 of the agreement is accurate. The geographic limits of the project, including limits of work on crossing routes, is the primary emphasis here because the scope of work within those limits is described in Section 2 of the agreement. The applicable standard scope section(s) of the SAPCS must be read through, in conjunction with the modifications contained in the specific agreement, in order to fully review the scope of work. The scope should clearly provide for all the services needed for any future part(s), phases and/or section(s).

10. E-mail an approved copy of all prime and supplemental scope of services and bar chart to the Agreements Unit Chief. For supplemental agreements, is there a project schedule change? ☐ yes or ☐ no. If yes, include dates in Section III and a revised bar chart as part of the supplemental agreement which is e-mailed.

    Phase III Only
    In lieu of a bar chart, the estimated completion date is _____.

11. **Prime Agreement:** Has the Consultant submitted the required payroll rate/classification and the direct cost information to Bureau of Design and Environment? ☐ yes or ☐ no. Have all subconsultants submitted the required payroll rate/classification and direct cost information to Bureau of Design and Environment? ☐ yes or ☐ no. If no, explain reasons:
    _____

    Supplemental Agreement: Is the Consultant proposing to utilize payroll rate/classifications and direct cost information from the previously approved agreement? ☐ yes or ☐ no.
    If no, has the consultant submitted new rates to BDE? ☐ yes or ☐ no.
    (This also applies for all subconsultants).

    Payroll Classification Descriptions: Has the Consultant provided descriptions of their payroll classifications to you? ☐ yes or ☐ no.
    If no, please inform them that they are required to submit them to you prior to your negotiation meeting.
    (This also applies for all subconsultants.)

12. Inform the Consultant a man-hour summary breakdown by prequalification area is required. These figures will be used to compute the percentage of work effort per category. The percentages may be adjusted during the life of the project based upon any supplemental agreements. The district must review and concur in the man-hour breakdown before submittal to Bureau of Design and Environment. The breakdown is summarized as follows:

Work Category	Percent*

*For supplemental agreements, the percent includes the prime and previous supplements.

13. Inform the Consultant that evaluations will be performed upon the submittal of the deliverables listed below:

_____
_____
_____
_____
_____
_____

Evaluations will be sent to the President of the firm
President _____
Address _____
_____ _____

The prime Consultant will be evaluated in the categories listed in item 12 above.

The subconsultant(s) will be evaluated as follows

Subconsultants	Prequalification Category	%

Furnish the Consultant (subconsultant) with copies of the evaluation forms to be used.

Was the specific evaluation criteria discussed with the Prime Consultant and subconsultants? ☐ yes or ☐ no. If no, explain why.

_____
_____
_____

(Item 14 is not applicable for Phase III)

14. If structure plans are included, the District is required to obtain the Bureau of Bridges and Structures (BBS) input for the meeting. The Agreement must show who will check the shop drawings and show the structure numbers.

Structure Number	County	Letting Date	Consultant
_____	_____	_____	_____
_____	_____	_____	_____
_____	_____	_____	_____

*Are the man-hours within the limits established by BBS? ☐ yes or ☐ no. If no, explain the differences and why _____
_____

15. Does the staffing plan agree with the plan set forth in the Statement of Interest? ☐ yes or ☐ no. If no, describe the differences and why. Has this been discussed with the proper Central Bureau/Section? _____
_____
_____
_____

16. It is recommended that the basis of payment for this work should be _____
Reason(s)_____
_____

17. If the negotiated fee for this work is over 10% of the district estimate given to the Selection Committee, a detailed explanation and justification must be given for the additional work or overrun, and a Consultant Agreement Approval Sheet (CAAS) submitted.

18. Funding for this contract will be as follows:

Fiscal Year	Amount	Program Code Number(s)
_____	_____	_____
_____	_____	_____
_____	_____	_____
_____	_____	_____

The estimated fee for work to be negotiated at a later date:

Phase I $_____ Phase II $_____

19. If PE is not included in the annual program, describe arrangements being made to have it added (attach correspondence):
_____
_____
_____

(Item 20 is not applicable for Phase III)

20. Indicate status of design approval below. Show dates of receipt of design approval. If you use an anticipated date, you must notify the Agreements Unit once design approval has been received, or if the anticipated design approval date changes.

Route	Section	Design Approval Date	Structure No. (If Applicable)
_____	_____	_____	_____
_____	_____	_____	_____
_____	_____	_____	_____
_____	_____	_____	_____

Risk Management.

Will it be necessary to proceed with construction plan preparation prior to design approval?
☐ yes or ☐ no. If yes, state why.

_____
_____
_____

21. The Consultant was advised that the Complexity Factor (R) of _____ will be used in determining the upper limit of compensation.

For Cost Plus Fixed Fee Contracts.
Determination of the fixed fee for cost plus fixed fee contracts is:

Fixed fee = 0.145 [DL+R(DL) + OH(DL) + DC]
Where: DL = Direct Labor
DC = In House Direct Cost
R = Complexity Factor
OH = Overhead Rate (Current SEFC)

22. The Consultant should be given the necessary forms for preparation of estimates and cost. Forms are available on the IDOT website.

(ITEM 23 MAY BE SKIPPED FOR DLM METHOD OF COMPENSATION).

23. The Consultant should prepare the "Cost Estimate of Consultant Services" using the additives submitted with their current "Statement of Experience and Financial Condition".

24. State and Federal regulations require a pre-agreement audit. If this audit discloses costs not in accordance with those used, an adjustment in the estimate will be made by the Agreements Unit and the Consultant will be informed of this.

25. Provide the address where checks to the Consultant are to be mailed:

Address:_____

City:_____State_____Zip_____

Submitted by _____

Date _____

Phone Number _____

Illinois Department of Transportation
2300 South Dirksen Parkway / Springfield, Illinois / 62764

BDE PROCEDURE MEMORANDUM

NUMBER: 23-01

SUBJECT: Pavement Patching for Multilane Jointed Plain Concrete Pavement (JPCP), Jointed Reinforced Concrete Pavement (JRCP), Asphaltic Concrete (AC) Overlaid JPCP and AC Overlaid JRCP

DATE: July 24, 2001

This memorandum supercedes the information found in Section 53-4.01 of the BDE Manual, providing new and additional guidance in the patching of JPCP, JRCP, AC Overlaid JPCP and AC Overlaid JRCP.

Background

This procedure memorandum was developed to establish patching guidelines to reduce the inconvenience to motorists.

Applicability

The following procedures are applicable to all projects involving patching on roadways with four lanes or more, both divided and undivided. This procedure is effective beginning with the November 9, 2001 letting.

Procedures

The following procedures establish design guidelines for use of patching on JPCP, JRCP, AC Overlaid JPCP and AC Overlaid JRCP.

- Full- and Partial-Depth Undowelled Bituminous Patches (Class D). Full- and Partial- Depth Class D patches shall be specified for use on all projects involving:
  - previously resurfaced jointed concrete pavements.
  - patching and resurfacing of bare jointed concrete pavements.
  - patching of jointed pavements which are scheduled to be resurfaced within one year.
- Full-Depth Dowelled Patches (Class B). Class B patches shall only be specified for use on bare jointed pavement that is not scheduled to be resurfaced within one year.

Engineer of Design and Environment Michael L. Hine

Illinois Department of Transportation
2300 South Dirksen Parkway / Springfield, Illinois / 62764

BDE PROCEDURE MEMORANDUM

NUMBER: **26-02A**

SUBJECT: **Compliance with Asbestos Requirements For Highway Bridges**

DATE: **June 7, 2002**

This memorandum supersedes BDE Procedure Memorandum 26-02, dated April 19, 2002. The procedures contained herein shall govern the Department's compliance with the asbestos requirements in 40 CFR Part 61 for work on highway bridges under State jurisdiction until such time as the procedures are modified or rescinded.

Background

In an October 19, 2001 letter, the Region 5 Office of the U. S. Environmental Protection Agency (USEPA) approved an IDOT request for a waiver from the asbestos notification requirements under 40 CFR Part 61.145 for highway bridges [as defined in 23 CFR 650.403(a)] determined not to involve asbestos in the bridge deck wearing surface or waterproofing membrane. The initial group of bridges covered by the waiver is included in a list for each District, provided as an attachment to this memorandum. USEPA Region 5 also has approved IDOT's proposed approach for addressing bridges in which involvement of asbestos in the bridge deck wearing surface or waterproofing membrane is unconfirmed. Application of this approved approach will allow for exempting other bridges from the asbestos notification requirements upon confirmation by IDOT that the bridge deck wearing surface and waterproofing membrane, if one is present, do not contain asbestos.

These procedures do not address the evaluation of asbestos in structures such as tender houses associated with bridges. Work affecting such structures should be coordinated with the Asbestos Abatement Unit in the central Bureau of Administrative & Facility Services for compliance with applicable inspection and notification requirements. This coordination should be initiated sufficiently in advance of the commencement of work that would affect the structures to allow time for accomplishing any necessary investigations and paperwork.

These procedures also do not address the evaluation of and response to asbestos in pipes, conduits, or other such utilities associated with bridges. The owners of the pipes, conduits, etc. shall be responsible for determining whether

they involve asbestos and for ensuring compliance with applicable requirements for any work that could disturb regulated asbestos that the pipes, conduits, etc. may contain. If unexpected pipes or conduits are encountered (e.g., embedded in the concrete bridge components) work affecting the pipes or conduits shall be suspended until ownership has been determined and any necessary inspection, testing, and notification has been completed.

The following sections of this memorandum describe the procedures for documenting application of the notification waiver for bridges in the initial group and for applying and documenting the approved approach for addressing bridges with unconfirmed asbestos involvement. They also describe the notification procedures and special provision to be followed for bridges involving bituminous overlays and waterproofing membranes that are confirmed to contain asbestos.

Bridge lists coordinated with EPA for purposes of the asbestos notification waiver request were prepared in cooperation with the Bureau of Urban Program Planning, Planning Services Section on the basis of information provided by the Districts. If errors or omissions are found in the lists, they should be brought to the attention of the Planning Services Section in Urban Program Planning and the Bridge Planning Section in the Bureau of Bridges and Structures.

Applicability

The procedures in this memorandum are applicable to all highway bridges under State jurisdiction.

Procedures

For all projects that will involve bridge demolition (removal or wrecking of any load-supporting structural member), reconstruction, rehabilitation, or deck repair, the District must determine and document applicability of the asbestos notification requirements. The District will be responsible for complying with the asbestos notification requirements for any work that will disturb a bridge deck wearing surface or waterproofing membrane that contains asbestos. (See note in the “Background” section regarding structures such as tender houses and pipes or conduits associated with a bridge that may contain asbestos.)The asbestos notification determination should be completed as far in advance as practical of the anticipated date for beginning construction work to allow sufficient time for compliance with notification requirements, if applicable. The asbestos notification determination and documentation for highway bridges shall be accomplished in accordance with the following procedures. For purposes of documenting the asbestos determination finding, a single “Asbestos Determination Certification Form” (Attachment 1) can be used to

cover multiple structures when the same asbestos determination finding applies. The group form would then be submitted to the Bridge Planning Section of the Bureau of Bridges and Structures and a copy included in the District files and Phase I Engineering Report for each project involving one of the covered structures, as described in these procedures.

Bridges on Approved No Asbestos (Waiver) List

With this memorandum, each District is being provided a list of bridges covered by the notification waiver as of October 19, 2001, the date of USEPA approval of the waiver. This list is labeled "State Owned Bridges - No Asbestos" and is included as Attachment 4. For bridges included in this list, the District should complete the "Structure Identification" and "Certification" sections of the "Asbestos Determination Certification Form" (Attachment 1), and check box number 1 in the "Asbestos Determination" section. A copy of the completed form should be included in the District files and in the Phase I Engineering Report when a project is proposed involving demolition, reconstruction, or rehabilitation of the bridge, or repair of the deck on the bridge. This will document the basis for determining that the bridge does not contain asbestos in the bridge deck wearing surface or waterproofing membrane and is exempt from the asbestos notification requirements.

Bridges on Confirmed/Unconfirmed List

With this memorandum, each District also is being provided a second list of bridges that either are known to contain asbestos or for which the presence or absence of asbestos is unconfirmed. This list is labeled "Bridges Under Investigation for Asbestos" and is included as Attachment 5. For bridges listed as having known asbestos involvement, refer to the procedures in the section below on "Asbestos Involvement Confirmed." For unconfirmed cases, proceed with the following steps for evaluation.

Evaluation Based on Available Information

In accordance with the approach approved by USEPA, if a bridge is included in the list of bridges under investigation for asbestos and is unconfirmed for asbestos involvement, the District should first examine available information (e.g., file information, bridge plans) to attempt to verify whether asbestos is present in the bridge deck wearing surface or waterproofing membrane. If the District confirms on the basis of its information that asbestos is involved, refer to the procedures in the section below on "Asbestos Involvement Confirmed." If the District confirms on the basis of its information that asbestos is not involved, it should complete the "Structure Identification" and "Certification" sections of the "Asbestos Determination Certification Form," and check box number 2 in the "Asbestos Determination" section. The District shall submit a

copy of the completed form to the Bridge Planning Section of the Bureau of Bridges and Structures at the time the asbestos determination is made. Bridges covered by a signed Asbestos Determination Certification Form indicating that no asbestos is present will be exempt from the EPA asbestos notification requirements upon submittal of the signed certification form to the Bureau of Bridges and Structures. These bridges will be re-coded as "Asbestos Investigation Status: Complete" and "Bridge Contains Asbestos: N" on the list of bridges under investigation for asbestos. The Bureau of Bridges and Structures will provide the affected District(s) and Illinois EPA (which administers the asbestos requirements in Illinois on behalf of USEPA) updates to the bridge list for any month in which changes occur. A copy of the completed Asbestos Determination Certification Form should be included in the District files and in the Phase I Engineering Report when a project is proposed involving demolition, reconstruction, or rehabilitation of the bridge, or repair of the deck on the bridge.

Evaluation Based on Sampling and Testing

If information available to the District is not sufficient to confirm whether or not a bridge involves asbestos, the procedures in Attachment 2, "Sampling and Testing Procedure for Asbestos in Bituminous Bridge Deck Wearing Surface or Waterproofing Membrane" should be applied. If the results of testing confirm that asbestos is not involved, complete the "Structure Identification" and "Certification" sections of the "Asbestos Determination Certification Form" and check box number 3 in the "Asbestos Determination" section. The District shall submit a copy of the completed form to the Bridge Planning Section of the Bureau of Bridges and Structures at the time the asbestos determination is made. Bridges covered by a signed Asbestos Determination Certification Form indicating that no asbestos is present will be exempt from the EPA asbestos notification requirements upon submittal of the signed certification form to the Bureau of Bridges and Structures. These bridges will be re-coded as "Asbestos Investigation Status: Complete" and "Bridge Contains Asbestos: N" on the list of bridges under investigation for asbestos. The Bureau of Bridges and Structures will provide the affected District(s) and Illinois EPA updates to the bridge list for any month in which changes occur. A copy of the completed Asbestos Determination Certification Form should be included in the District files and in the Phase I Engineering Report when a project is proposed involving demolition, reconstruction, or rehabilitation of the bridge, or repair of the deck on the bridge.

If the test results indicate that the bridge deck wearing surface and/or waterproofing membrane do contain asbestos, refer to the procedures in the "Asbestos Involvement Confirmed" section, below.

Asbestos Involvement Confirmed

For bridges that are confirmed to involve asbestos in the bridge deck wearing surface and/or waterproofing membrane, if one is present, complete the "Structure Identification" and "Certification" sections of the "Asbestos Determination Certification Form" and check box number 4 in the "Asbestos Determination" section. A copy of the completed form should be included in the District files and in the Phase I Engineering Report when a project is proposed involving demolition, reconstruction, or rehabilitation of the bridge, or repair of the deck on the bridge. For structures that the "Asbestos Investigation Status" is shown as "Not Complete" in the list of bridges under investigation for asbestos (Attachment 5), the District also should submit a copy of the completed form to the Bridge Planning Section of the Bureau of Bridges and Structures at the time the asbestos determination is made. The information in the list will be re-coded to indicate "Asbestos Investigation Status: Complete" and "Bridge Contains Asbestos: Y" and updates will be provided to the affected District(s) and Illinois EPA for any month in which changes occur in the list.

The District will be responsible for ensuring compliance with the asbestos notification requirements for demolition or renovation of bridges involving deck wearing surfaces or waterproofing membranes containing asbestos. A completed "Notification of Demolition and Renovation" form (available at *http://www.epa.state.il.us/air/asbestos/index.html*) must be submitted to Illinois EPA at least 10 working days prior to commencing any work that would disturb any of the bituminous materials containing asbestos. A sample notification form is attached (Attachment 3) to provide guidance on the type of information that should be entered. Illinois EPA has advised that the start date and complete date for demolition and asbestos removal are key items of information for the notification. If exact dates are not known at the time the initial notification form is submitted estimated dates may be used. Revised notification must then be submitted to correct the information when the actual start and complete dates have been determined. The revised notification still must satisfy the requirement for submittal at least 10 working days prior to commencing any work that would disturb any of the bituminous materials containing asbestos. Since the notification forms generally will require information from both the contractor and the District, it is suggested that, where practical, the notification forms should be prepared at the pre-construction conference.

The District also will be responsible for ensuring that the special provision for "Asbestos Waterproofing Membrane and Asbestos Bituminous Concrete Surface Removal (BDE)" is included in the contract for work involving removal of bridge deck wearing surfaces or waterproofing membranes containing asbestos. The District also may wish to include a general note in the project plans or in the project commitment file to indicate that asbestos is present and will be subject to a special provision.

At such time as removal operations are completed for all asbestos bituminous concrete surface and asbestos waterproofing membrane on a bridge, the District should complete the "Structure Identification" and "Certification" sections of the "Asbestos Determination Certification Form," check box number 5 in the "Asbestos Determination" section, and submit a copy of the completed form to the Bridge Planning Section in the Bureau of Bridges and Structures. The information in the bridge list will be re-coded to indicate "Bridge Contains Asbestos: N" and updates will be provided to the affected District(s) and Illinois EPA for any month in which changes occur. Bridges covered by a signed Asbestos Determination Certification Form indicating that all asbestos-containing materials have been removed will be exempt from the EPA asbestos notification requirements upon submittal of the signed certification form to the Bureau of Bridges and Structures. A copy of the completed form should be included in the District files. For bridges that remain in place following removal of the asbestos-containing materials, a copy of the form also should be included in the Phase I Engineering Report for future work involving demolition, reconstruction, or rehabilitation of the bridge, or repair of the deck on the bridge.

When the bridge list indicates that all of the asbestos bituminous concrete surface and asbestos waterproofing membrane has been removed from all highway bridges in the State, the Bridge Planning Section in the Bureau of Bridges and Structures will advise the Bureau of Design and Environment (BDE). BDE will notify the Illinois EPA in writing and request approval to discontinue the asbestos determination and tracking procedures for highway bridges. Upon receipt of approval from IEPA/USEPA, the procedures in this memorandum will be rescinded.

Engineer of Design and Environment Michael L. Hine

Attachments

Illinois Department of Transportation

Asbestos Determination Certification

Structure Identification

Structure Number(s) (000-0000):

Asbestos Determination

☐ 1. The identified structures were included in the list that the USEPA exempted from the asbestos notification requirements in its letter of October 19, 2001.

☐ 2. The identified structures were unconfirmed for asbestos involvement as of October 19, 2001 but have subsequently been determined, on the basis of information available in the District office, not to involve asbestos in a bituminous bridge deck wearing surface or waterproofing membrane.

☐ 3. The identified structures were unconfirmed for asbestos involvement as of October 19, 2001 but have subsequently been determined, through testing, not to involve asbestos in a bituminous bridge deck wearing surface or waterproofing membrane. The test results were obtained in conformance with the approved "Sampling and Testing Procedures for Asbestos in Bituminous Bridge Deck Wearing Surface or Waterproofing Membrane" (Attachment 2 to BDE Procedure Memorandum 26-02).

☐ 4. The identified structures have been determined to involve asbestos in a bituminous bridge deck wearing surface and/or waterproofing membrane. The District will ensure compliance with the asbestos notification requirements for work on these structures that could disturb the asbestos-containing materials. The District also will ensure that the special provision for "Asbestos Waterproofing Membrane and Asbestos Bituminous Concrete Surface Removal (BDE)" is included in any contract for demolition of these structures or for other work involving removal of the existing bituminous bridge deck wearing surface and/or waterproofing membrane.

☐ 5. The identified structures had been determined to involve asbestos in a bituminous bridge deck wearing surface and/or waterproofing membrane. Removal operations have been completed for all asbestos bituminous concrete surface and asbestos waterproofing membrane on the identified structures.

Certification

Name: _____ Position Title: _____

Office Address: _____

_____ Phone Number: ( ) _____

_____ _____

Signature Date

Sampling and Testing Procedure for Asbestos in Bituminous Bridge Deck Wearing Surface or Waterproofing Membrane

Applicability

The following sampling and testing procedures shall be applied to State and local highway bridges that have in place a bituminous bridge deck wearing surface or bituminous waterproofing membrane and available information is insufficient to verify whether or not either of these components contains asbestos. Asbestos determination for applicable bridges must be completed prior to commencing any work that would disturb the wearing surface or waterproofing membrane. The determination must be made sufficiently in advance of the commencement of construction or demolition work to allow compliance with the notification requirements of the asbestos national emissions standards (40 CFR Part 61).

Sampling

The purpose of this sampling procedure is to obtain one or more representative samples of the bituminous wearing surface and/or waterproofing membrane, if one is present, for asbestos determination. At least one sample must be taken from each representative portion of the suspect bridge deck overlay material. If portions of a bridge deck involve overlay materials installed at different times, each such area must be sampled. If there is any reason to suspect that overlay materials might be different, even though they appear uniform, they should be sampled separately. Use of a licensed asbestos inspector for conducting the sampling is not required provided the protocol described below is followed.

Before initiating sampling, prepare a plan-view diagram of the bridge deck indicating the approximate dimensions, the area(s) of the deck surface to be sampled, and the sample location(s). If more than one sample will be taken, number the sample locations on the diagram and use the corresponding numbers when labeling each sample. The sampling diagram should be retained in the project files at least until testing of the samples has been completed and any areas of the bridge deck requiring application of the special provision for “Asbestos Waterproofing Membrane and Asbestos Bituminous Concrete Surface Removal (BDE)” have been identified.

Samples shall be removed with a minimum 2 inch diameter core drill. The depth of each sample shall be sufficient to include the full thickness of both the bituminous wearing surface and the waterproofing membrane, if one is present. For each sampling operation, sufficient water shall be applied before and during the core drilling to prevent generation of airborne dust as a result of the drilling and removal of the sample. Upon removal of the core sample, it shall immediately be placed in a resealable plastic sample bag. Each sample bag shall be labeled with the structure number (000-0000); route identification; county; water body or facility crossed; name and employer (if other than IDOT) of the person removing the sample, and sample number keyed to the diagram of the bridge deck showing the sample location(s).

Testing

The samples of the bituminous bridge deck wearing surface and/or bituminous waterproofing membrane shall be tested for the presence of asbestos using the Polarized Light Microscopy (PLM) method specified in Section 1 of Appendix E, Subpart E, 40 CFR part 763. The testing shall be performed by a laboratory that has National Voluntary Laboratory Accreditation Program (NVLAP) or National Environmental Laboratory Accreditation Program (NELAP) accreditation for asbestos fiber analysis using the PLM method and is equipped for performing analysis of nonfriable organically bound asbestos using Gravimetric Reduction.* If a bituminous waterproofing membrane layer is present, testing shall be conducted on portions of the sample from both the waterproofing membrane layer and the wearing surface layer.

Materials which are determined, through application of the specified testing method, to contain more than one percent asbestos are classified as Category II nonfriable Asbestos Containing Materials (ACM). Work that would disturb Category II nonfriable ACM is subject to the notification requirements in 40 CFR part 61.145. Removal of such materials shall be accomplished in accordance with the Statewide special provision for "Asbestos Waterproofing Membrane and Asbestos Bituminous Concrete Surface Removal (BDE)."

* A listing of laboratories that are accredited for asbestos testing through the NVLAP is available at *http://ts.nist.gov/ts/htdocs/210/214/scopes/plmtm.htm*.
Information concerning laboratories that are accredited through the NELAP is available at *http://www.epa.gov/ttn/nelac/accreditlabs.html*.

ATTACHMENT 3

REC. NO. _____

NOTIFICATION OF DEMOLITION AND RENOVATION

IL 532 1296
APC 430 Rev.03/00

Illinois Environmental Protection Agency P.O. Box 19276, Springfield, IL 62794-9276

THIS INFORMATION IS REQUIRED: NESHAP-40CFR-SUBPART M-61.145, Rev. Nov. 20, 1990

ALL SECTIONS MUST BE COMPLETED TO AVOID NOTICE VIOLATION

1. TYPE OF NOTIFICATION (O-Original/R-Revised/C-Canceled): [Enter appropriate letter.]

2. TYPE OF OPERATION (R-Renovation/D-Demo/A-Annual/O-Ordered Demo/E-Emergency Renovation): [Enter R or D.]

3. FACILITY DESCRIPTION (~~Building Name~~): Highway Bridge - Structure # ___ - ____

Address: Bridge carrying [facility carried] over [feature crossed] - [Location]

City: [Name of nearest town/city.]	County: [County name.]	State: IL	ZIP: [Enter if in town/city.]

Location of Asbestos Containing Material (ACM) in structure: [Indicate location - e.g., bituminous deck wearing surface.]

Bldg. Size: N/A	# of Flrs. N/A	Age: [Age of bridge.]	Present Use: Highway Bridge

Prior Use: —	Future Use (Demo): —

4. IS ASBESTOS PRESENT? (Y) N

5. WORK HOURS:* [Beginning hour] a.m. [Ending hour] p.m.

6. SCHEDULED DATE DEMOLITION: (As applicable) Start: [mo/day/year] Complete: [mo/day/year]

7. SCHEDULED DATE ASBESTOS REMOVAL: Start: [mo/day/year] Complete: [mo/day/year]

8. REGULATED ASBESTOS CONTAINING MATERIAL TO BE REMOVED (RACM):		**NONFRIABLE ASBESTOS NOT TO BE REMOVED (Demolition):**		**NONFRIABLE ASBESTOS TO BE REMOVED:**	
		CATEGORY I	CATEGORY II	CATEGORY I	CATEGORY II
Pipes (Ln. Ft.)					
Surface Area (Sq. Ft.)	[Enter #]				[Enter #]
Volume (Cu. Ft.)					

9. ASBESTOS REMOVAL CONTRACTOR: [Identify Contractor or Sub-contractor performing asbestos bitum. removal.]

Address: [Contractor/Sub-contractor Address]		City: [C/S-C City]
State, Zip: [C/S-C State, Zip]	Contact: [C/S-C Contact]	Phone: [C/S-C Phone]

10. DEMOLITION CONTRACTOR: [Identify Contractor or Sub-contractor performing bridge demolition.]

Address: [C/S-C Address]		City: [C/S-C City]
State, Zip: [C/S-C State, Zip]	Contact: [C/S-C Contact]	Phone: [C/S-C Phone]

11. OWNER NAME: Illinois Department of Transportation

Address: [Enter District Office Address]		City: [D.O. City]
State, Zip: [D.O. Zip]	Contact: [D.E. Name or District Contact]	Phone: [D.O. Phone]

12. WASTE TRANSPORTER: [Enter information provided by Contractor.]

Address: "		City: "
State, Zip: "	Contact: "	Phone: "

13. WASTE DISPOSAL SITE: [Enter information provided by contractor]

Address: "		City: "
State, Zip: "	Landfill Permit #: "	Phone: "

-AGENCY USE ONLY-

Date Received: Input to ACTS: To Region 1 2 3

Post Mark Date: To Cook/City: Champaign: LaSalle:

Springfield: Rockford: Moline: Marion:

[Guidance on the asbestos notification requirements is available under the Air/Asbestos topic on the web site for USEPA Region 5 (http://www.epa.gov/region5/).]

14. PROCEDURE, INCLUDING ANALYTICAL METHOD, USED TO DETECT THE PRESENCE OF ASBESTOS.

[Enter description of method - e.g., review of file information, sampling/testing using PLM.]

ILLINOIS LICENSE NUMBER OF INSPECTOR: Not required for highway bridges.

NAME OF ANALYTICAL TESTING LABORATORY: [Enter name of lab if testing was conducted.]

15. DESCRIPTION OF PLANNED DEMOLITION OR RENOVATION WORK:

[Enter description.]

METHODS TO BE EMPLOYED INCLUDING DEMOLITION OR RENOVATION TECHNIQUES.

[Enter information - provided by contractor.]

16. DESCRIPTION OF WORK PRACTICES AND ENGINEERING CONTROLS TO BE USED TO PREVENT EMISSIONS AT THE DEMOLITION OR RENOVATION SITE:

Removal of bituminous bridge deck wearing surface and waterproofing membrane, if one is present, will be accomplished in conformance with the IDOT Special Provision for "Asbestos Waterproofing Membrane and Asbestos Bituminous Concrete Surface Removal (BDE)."

17. IS DEMOLITION ORDERED BY A GOVERNMENTAL AGENCY? Y (N) (If Yes, a signed copy of Order must be attached.)

Governmental representative ordering the activity:

Title: Date of Order: Ordered Demolition Date:

18. FOR EMERGENCY RENOVATIONS: N/A

Date and Hour of Emergency:

Description of the Sudden, Unexpected Event (e.g. structure in danger of eminent collapse):

19. DESCRIPTION OF PROCEDURES TO BE FOLLOWED IN THE EVENT THAT UNEXPECTED ASBESTOS IS FOUND OR PREVIOUSLY NONFRIABLE ASBESTOS MATERIAL BECOMES CRUMBLED, PULVERIZED, OR REDUCED TO POWDER.

If unexpected asbestos is found, work that would disturb the asbestos will be suspended until any necessary inspection, testing, and notification to IEPA has been completed and a course of action that complies with 40CFR 61, Subpart M, has been determined.

20. I CERTIFY THAT AT LEAST ONE REPRESENTATIVE, TRAINED IN THE PROVISIONS OF 40 CFR PART 61, SUBPART M, SHALL BE ON-SITE DURING DEMOLITION OR RENOVATION, HAVING IN HIS OR HER POSSESSION, FOR INSPECTION, EVIDENCE THAT THE REQUISITE TRAINING HAS BEEN ACCOMPLISHED.

I CERTIFY THE ABOVE INFORMATION IS CORRECT.

Signature of Owner/Operator Date
(Original Signature Only, Photocopy Not Valid)

*Not required under NESHAPS.

Mail this form to: IL Environmental Protection Agency, Attn: Asbestos Unit, P.O. Box 19276, Springfield, IL 62794-9276

ATTACHMENT 4

State Owned Bridges – No Asbestos

(A list for each district has been provided to the respective District Office.)

ATTACHMENT 5

State Owned Bridges Under Investigation For Asbestos

(A list for each district has been provided to the respective District Office. Updates to the lists will be transmitted to the affected District Offices when changes occur.)

Illinois Department of Transportation
2300 South Dirksen Parkway / Springfield, Illinois / 62764

BDE PROCEDURE MEMORANDUM

NUMBER: 27-02

SUBJECT: Temporary Concrete Barrier

DATE: July 1, 2002

Background

Crash testing criteria for highway safety features was previously detailed under National Cooperative Highway Research Program (NCHRP) Report 230 (Published 1980). This report recommended testing and using NCHRP Report 230 devices but did not require their use. In 1993, the Transportation Research Board issued NCHRP Report 350 "Recommended Procedures for the Safety Performance Evaluation of Highway Features". The purpose of this report was to present uniform guidelines for the crash testing of both permanent and temporary highway safety features and recommended evaluation criteria to assess test results. This report provided six test levels. Test Level 3 using an 1800 lb. (820 kg) car and 4400 lb. (2000 kg) pickup truck at 60 mph (100 km/h) is considered the basic test level. FHWA adopted the NCHRP Report 350 as a national guideline and initially required all devices, both permanent and temporary, used on the National Highway System to meet these guidelines effective October 1, 1998.

As relatively few temporary concrete barriers met these test requirements, FHWA in an agreement with AASHTO and ARTBA provided for a phase-in of increasingly stringent requirements. As of October 1, 2000 all temporary concrete barrier was required to transfer both moment and tension between segments in addition to meeting Report 230 guidelines. The existing State Standard 704001 meets these requirements and has continued to be produced and installed. The connection used in Illinois's New Jersey barrier along with four other connections meeting the combined criteria were identified in the AASHTO Roadside Design Guide as "Tested and Operational."

However, to meet federal requirements as of October 1, 2002, any <u>new</u> temporary concrete barrier used must meet NCHRP Report 350 Test Level 3 guidelines. Existing barriers meeting the 230 testing requirements may be used during a phase out period as long as they remain serviceable. As noted above, Illinois's New Jersey barrier is approved for use for a period of time as it's connection is one of the five identified in the AASHTO Roadside Design Guide as "Tested and Operational"; however, it does not meet NCHRP 350 Test Level 3.

The shape of the temporary concrete barrier plays a role in safety performance. In crash tests, the F-shape has proven to be the most successful in reducing the lift of vehicles and in preventing rollover of smaller vehicles. Illinois will begin using the F-shape barrier in a configuration approved under NCHRP Report 350 Test Level 3.

This Procedure Memorandum is intended to provide guidance for the usage of temporary concrete barrier on State Highways in Illinois.

Applicability

The procedures in this memorandum are applicable to all State Highway projects.

Procedures

The following procedures establish design guidelines for use of temporary concrete barrier.

Temporary concrete barriers are widely used in work zones to shield motorists as well as workers. The impact performance of the barrier depends, among other factors, on segment length and mass, the manner in which segments are joined, the joint rotation, and the manner in which segments are anchored.

The new Illinois F-shape barrier dimensions are not the same as the existing New Jersey shape. The length and width of the new barrier will be 12.5 ft. (3.8 m) and 22.5 in. (570 mm), respectively. These dimensions will need to be considered during the design process. Related Standards will also be updated to reflect the new length. All NCHRP 350 temporary concrete barriers were tested on bare pavement. Therefore, Styrofoam shall not be used with the new Illinois F-shape barrier but will continue to be required with the existing New Jersey barrier.

The barrier unit at each end of the installation shall be anchored to the pavement to prevent overturning and lateral deflections greater than those obtained during the NCHRP 350 tests. The terminal section will no longer be allowed for use with either the New Jersey or the F-shape barriers. The approach end(s) of the temporary barriers shall be protected with a NCHRP 350 Test Level 3 approved device such as a multiple array of sand filled plastic barrels or a Type 3, Special Terminal. Single barrel arrays are not approved for use. Consideration should be given to the frequency of nuisance hits and to protecting the construction hazard and workers when selecting the appropriate crash cushion. If the speeds warrant the use of a NCHRP 350 Test Level 2 approved device (45 mph [70 km/h] or less), the designer shall state such in the Special Provisions.

A minimum offset of 2 ft. (600 mm) from the travel lane to the temporary concrete barrier is desirable. When lateral displacement of the barrier cannot be tolerated, it may be necessary to anchor the barrier to the underlying

surface to prevent lateral movement. At locations where a hazard exists within 3.5 ft. (1.1 m) of the temporary concrete barrier, the barrier shall be anchored to the pavement. The designer should state in the plans or special provision when the barriers need to be anchored.

FHWA is allowing the use of any previously existing temporary concrete barrier that meets Report 230 for the duration of the barrier's service life. In an agreement with FHWA, the Department has set a phase out date of January 1, 2008. Existing New Jersey barrier can be used through the completion of a project past the phase out date. When existing temporary New Jersey barrier is in place and used as a permanent installation, the barrier may continue to remain in place until the next rehabilitation project as long as it is in good condition and does not have a history of frequent hits. The "Quality Standard for Work Zone Traffic Control Devices" by the Bureau of Operations shall be used to determine if existing barrier is considered suitable for use. Mixing of the existing New Jersey barrier and the F-shape barrier will not be permitted in a continuous run of barrier.

When specifying State owned barrier, the designer should state in the plans or special provisions where the storage site is located. The plans should also include a statement to indicate where the barriers are to be returned at the completion of the project. In addition, we should state what we will provide. The State typically provides the barrier and connecting pins.

Engineer of Design and Environment Michael L. Hine

Illinois Department of Transportation
2300 South Dirksen Parkway / Springfield, Illinois / 62764

BDE PROCEDURE MEMORANDUM

NUMBER: **28-02**

SUBJECT: **Validity of Special Waste Assessment Results**

DATE: **July 1, 2002**

This memorandum modifies the information in Section 27-2.07 of the BDE Manual. The changes addressed in this memorandum will be incorporated in the Manual in a future update.

Background

Section 27-2.07 of the BDE Manual currently recognizes that, in accordance with American Society for Testing and Materials (ASTM) standards, property audits for special waste/regulated substance contamination should only be considered valid for a period of six months.

Departmental Policy D&E-11 on "Identifying and Responding to Regulated Substances in Highway Project Development" provides that due care must be taken to ensure that the risks and liabilities posed by special waste/regulated substance contamination are appropriately recognized and considered in project decisions. To meet the intent of D&E-11, the results of prior examinations of the project area for special wastes/regulated substances should be validated prior to proceeding with key project decisions if more than six months have elapsed since the examinations were completed. The procedures in this memorandum provide guidance on the decision points and time frames for reevaluating and/or reinitiating project examinations for special waste/regulated substance contamination.

Applicability

The procedures in this memorandum are applicable to all State highway projects.

Procedures

If more than six months have elapsed since the last examination of a project for special waste/regulated substance contamination [i.e., District screening/sign-off or preliminary environmental site assessment (PESA)], the District must validate the examination results before proceeding with arrangements for

further special waste/regulated substance investigations, before submitting draft or final environmental or Phase I engineering documents for approval, or before initiating land acquisition. (Examples of further special waste/regulated substance investigations would include PESA for projects covered by a District sign-off and preliminary site investigation (PSI) or remedial investigation/feasibility study (RI/FS) for projects covered by a PESA.) The validation review should include a check for new reported releases (lists provided or referenced by BDE) and new land uses of potential concern. If changes are identified, a PESA should be conducted to evaluate the new reported release(s) and/or new potential land use concern(s).

If three years or more have elapsed since the last examination for special waste/regulated substance contamination (District screening and sign-off or PESA), the entire project should be reevaluated as a new action prior to proceeding with arrangements for further special waste/regulated substance investigations, before submitting draft or final environmental or Phase I engineering documents for approval, or before initiating land acquisition. If a project was initially screened and cleared by the District, the reevaluation after three years may again consist of District screening and clearance, provided no changes have occurred in the project area that would alter the findings upon which the original clearance was based.

If a PSI was conducted for a project and five years or more have elapsed since it was completed, the entire project should be evaluated for regulated substances as a new action and a new PESA must be conducted prior to proceeding with the aforementioned project actions.

When validation of the results of special waste/regulated substance evaluations is necessary, the review should consider any changes in the proposed action, the affected environment, anticipated special waste/regulated substance involvement, and proposed measures for addressing the special waste(s)/regulated substance(s). For studies requested through BDE, sufficient detail must be provided to support a decision on whether a new PESA or PSI is necessary.

Engineer of Design and Environment Michael L. Hine

Illinois Department of Transportation
2300 South Dirksen Parkway / Springfield, Illinois / 62764

BDE PROCEDURE MEMORANDUM

NUMBER: **31-03**

SUBJECT: **Incidental Taking Authorization Procedures**

DATE: **March 19, 2003**

This memorandum supersedes BDE Procedures Memorandum 31-02, dated September 23, 2002, and supplements the information in Section 26-9.06 of the BDE Manual. This memorandum includes changes to clarify the point in the project development and implementation process at which an incidental taking authorization must be in place on undertakings that will involve an incidental taking. The procedures described in this memorandum will be incorporated in the BDE Manual in a future update.

Background

Section 11 of the Illinois Endangered Species Protection Act (520 ILCS 10/11) states that where a State or local agency evaluates its actions through the Endangered Species Act consultation process with the Illinois Department of Natural Resources (IDNR), the agency shall be deemed to have complied with its obligations under the Act, provided the agency action shall not result in the killing or injuring of any Illinois-listed animal species or provided that authorization for taking a listed species has been issued in accordance with Sections 4, 5, or 5.5 of the Act. Based on this language, the endangered species consultation process can be used to establish compliance with the Act for all impacts of agency actions on Illinois-listed plant species. The consultation process also can establish compliance for effects of agency actions on Illinois-listed animal species, provided the action will not result in killing or injuring of any of the species. However, if the agency action will result in killing or injuring of a listed animal species, the only way compliance with the Act can be established for that aspect of the action is by obtaining an authorization for "taking". (Section 2 of the Act defines "take" to mean, in reference to animals, "…to harm, hunt, shoot, pursue, lure, wound, kill, destroy, harass, gig, spear, ensnare, trap, capture, collect, or to attempt to engage in such conduct." This definition covers killing or injuring of listed animal species.)

Section 5.5 of the Act sets forth "incidental taking" provisions whereby IDNR may authorize a "taking" that is incidental to, and not the purpose of, the carrying out of an otherwise lawful activity. IDNR has promulgated detailed procedures for the incidental taking authorization process in Administrative Rules. (Refer to BDE Information Memorandum 01-35 for information regarding Section 5.5 of the Act and the Administrative Rules for the incidental taking

authorization process, published in the Illinois Register August 3, 2001.) Where an IDOT project will result in killing or injuring of an Illinois-listed animal species, the incidental taking authorization process will be the means of establishing compliance with the Act for that impact to the species.

Applicability

The procedures in this memorandum are applicable to all State highway projects.

Procedures

As discussed in the "Background" section, the requirements for obtaining an incidental taking authorization will apply to any project that will result in killing or injuring of Illinois-listed animal species. The need for requesting an incidental taking authorization will be based on a thorough evaluation of the likelihood that the project will result in the killing or injuring of any Illinois-listed animal species. This evaluation will consider available data and/or the results of field studies regarding the actual occurrence of Illinois-listed animal species (not just the existence of suitable habitat) within the specific area that will be affected by the project. It will also consider the potential for the undertaking to actually impact the species such that they may be killed or injured. IDNR staff responsible for administering the incidental taking authorization requirements has advised that they will recommend obtaining an incidental taking authorization only if there is a high likelihood, or near certainty that listed animal species will be killed or injured by an agency action. (They have clarified that they have no authority to require an agency to request an incidental taking authorization and can only make recommendations. However, they also pointed out that if an agency's action results in killing or injuring of an Illinois-listed animal species and does not have an incidental taking authorization, the agency could be subject to the penalty provisions in Section 9 of the Endangered Species Protection Act.)

Recommendations for obtaining an incidental taking authorization may be included in IDNR's coordination responses (e.g., for a Biological Resource Review, Agency Action Report, or Detailed Action Report). Another possibility is that the district and/or BDE may determine that an incidental taking authorization is needed, based on the results of field studies or other available information. If an incidental taking authorization is determined to be necessary, the application process should be initiated as soon as possible after the need for the authorization is confirmed. The Endangered Species Protection Act and the implementing rules on incidental taking provide that the authorization for incidental taking must be in place before a taking occurs. To ensure appropriate compliance with this requirement on highway projects, the incidental taking authorization must be in place prior to awarding the contract for the work that will cause the incidental taking, unless the potential incidental taking issue is not identified until after such contract has been awarded. If the

potential incidental taking is identified after award, the authorization still must be in place before proceeding with the work that would result in a taking. It is recommended that coordination with IDNR for a potential incidental taking be initiated as early as practical to afford maximum flexibility for considering and accommodating alternatives to avoid, minimize, and mitigate the taking. The avoidance alternatives and minimization/mitigation measures will ultimately be reflected in the conservation plan, which will provide the information IDNR will use in making its decision on approval or denial of the authorization request. Although there currently is no requirement for having the incidental taking authorization prior to design approval, coordination with IDNR on the incidental taking issues should occur prior to that point to ensure that project plans reflect decisions (e.g., regarding minimization and mitigation measures for the proposed incidental taking) that are acceptable to IDNR for purposes of approving the incidental taking authorization. Failure to do so may result in potentially costly project/plan changes and delays later in project development or implementation (e.g., if IDNR does not accept the minimization and mitigation measures as planned or stipulates additional measures as a condition for approving the incidental taking authorization).

When the need for an incidental taking authorization is identified during Phase I, the public notice procedures required for the incidental taking authorization should be coordinated to coincide with other public involvement activities for the project to the extent practical.

If the district receives a recommendation from IDNR or BDE to obtain an incidental taking authorization and subsequently determines that the incidental taking authorization will not be pursued (e.g., because changes in the project have eliminated the need), the district shall provide written notification to the BDE. The notification shall be provided as soon as possible after the determination is made and shall include an explanation of the reason(s) for not seeking the incidental taking authorization.

When authorization for incidental taking is determined necessary, the following procedures will apply, unless the IDNR has approved special “programmatic” procedures for the category of action and species involved. In such case, the approved alternate procedures will govern.

1. The district will be responsible for preparing the required Conservation Plan* and newspaper notice for compliance with the incidental taking

* *The State implementing rules for the incidental taking requirements provide that a Habitat Conservation Plan approved by the U.S. Fish and Wildlife Service pursuant to Section 10 of the Endangered Species Act of 1973 may be submitted in lieu of a Conservation Plan as otherwise required under the State rules. The rules also provide that an authorization to take an endangered or threatened species under the terms of a biological opinion issued by the U.S. Fish and Wildlife Service pursuant to Section 7 of the Endangered Species Protection Act of 1973 may be submitted in lieu of a Conservation Plan.*

authorization rules (17 Ill. Adm. Code 1080, distributed via BDE Information Memorandum 01-35). BDE will provide information and technical assistance, as needed, to help the district in preparing the plan and notice. (This may include, for example, biological data on the affected species, recommendations for mitigation measures, data and information regarding the effect of the proposed taking on the likelihood of the survival of the listed species, and information identifying participants that will be involved in implementing portions of the Conservation Plan).

Conservation Plan – The Conservation Plan must contain the following, at a minimum:

a. A description of the impact likely to result from the proposed taking of the listed animal species that would be covered by the authorization, including, but not limited to:
   (1) Legal description, if available, or detailed description including street address and map of the area to be affected by the proposed action and information indicating the ownership or control of the affected property;
   (2) Biological data on the affected species;
   (3) Description of the activities that will result in taking (killing or injuring) of the endangered or threatened animal species; and
   (4) Explanation of the anticipated adverse effects on the listed species.
b. Measures that will be taken to minimize and mitigate the impact on the listed animal species and the funding that will be available to undertake those measures, including, but not limited to:
   (1) Plans to minimize the area affected by the proposed action, the estimated number of individuals of the endangered or threatened species that will be taken, and the amount of habitat affected;
   (2) Plans for management of the area affected by the proposed action that will enable continued use of the area by endangered or threatened species;
   (3) Description of all measures to be implemented to minimize or mitigate the effects of the proposed action on the endangered or threatened species;
   (4) Plans for monitoring the effects of measures implemented to minimize or mitigate the effects of the proposed action on the endangered or threatened species;
   (5) Adaptive management practices that will be used to deal with changed or unforeseen circumstances that affect the effectiveness of measures instituted to minimize or mitigate the effects of the proposed action on the endangered or threatened species; and
   (6) Verification that adequate funding exists to support and implement all mitigation activities described in the Conservation Plan.

c. A description of alternative actions considered that would not result in take of an Illinois-listed animal species and the reasons that each of those alternatives was not selected. A “no action” alternative shall be included in this description of alternatives.
d. Data and information to indicate that the proposed taking will not reduce the likelihood of the survival of the endangered or threatened animal species in the wild within the State of Illinois, the biotic community of which the species is a part, or the habitat essential to the species’ existence in Illinois.
e. An implementing agreement, which shall include, but not be limited to:
   (1) The names and signatures of all participants in the execution of the Conservation Plan;
   (2) The obligations and responsibilities of each of the identified participants with schedules and deadlines for completion of activities included in the Conservation Plan and a schedule for preparation of progress reports to be provided to the IDNR;
   (3) Certification that each participant in the execution of the Conservation Plan has the legal authority to carry out their respective obligations and responsibilities under the Conservation Plan;
   (4) Assurance of compliance with all other federal, State and local regulations pertinent to the proposed action and to execution of the Conservation Plan; and
   (5) Copies of any final federal authorizations already issued for the proposed taking, if any.

<u>Newspaper Notice</u> – The notice for publication in the newspaper as described later in these procedures, must include the following, at a minimum:

a. The name of the district contact person and the district office mailing address;
b. A map or description that clearly shows or describes the precise location and boundaries of both the area to be affected by the proposed project and any areas to be affected by provisions of the Conservation Plan and is sufficient to enable local residents to readily identify the subject areas. It must include towns, bodies of water, local landmarks, or any other information that would identify the subject areas. If a map is used, it shall indicate the north direction;
c. A summary of the incidental taking for which authorization is being requested;
d. A summary of the measures that will be instituted to minimize and mitigate the effects of the proposed incidental taking;
e. The location where a copy of the Conservation Plan is available for inspection;
f. The street and e-mail address of the IDNR office to which comments on the Conservation Plan may be submitted; and

g. The closing date for receipt of written comments on the Conservation Plan. (The closing date must allow at least 30 days from the last date the notice will be published in the newspaper as discussed in 5, below.)

2. After the district, in consultation with BDE, as necessary, has prepared the Conservation Plan and proposed newspaper notice, it shall submit two (2) copies of each to BDE.

3. BDE will complete a final review of the Conservation Plan and notice. After resolving any comments with the district, BDE will forward the Conservation Plan and notice to IDNR.

4. Within 30 days of receipt of the Conservation Plan and notice, IDNR will either respond that the Conservation Plan is complete and the newspaper notice is satisfactory or will provide an indication of any deficiencies identified in the Conservation Plan or notice.

5. If IDNR identifies deficiencies in the Conservation Plan or notice, BDE will coordinate with the district and IDNR as necessary to resolve the deficiencies. When IDNR advises that the Conservation Plan is complete and the notice is satisfactory, the district shall proceed with publication of the notice. It shall be placed in a newspaper of general circulation in the locality of the proposed action at least once a week for three (3) consecutive weeks. At least fourteen (14) days must elapse between the first and last publication of the notice. Concurrent with the first publication in a local newspaper, the notice also shall be published one time in the official State newspaper. Prior to, or concurrent with, publication of the first newspaper notice, the district shall make one or more copies of the complete Conservation Plan available for review at the nearest public library in the county or counties in which the proposed action will occur. The district also shall provide a copy of the complete Conservation Plan to the Executive Director of the Illinois Endangered Species Protection Board at IDNR headquarters.

6. The Incidental Taking rules in 17 Ill. Adm. Code 1080.30 provide that comments on the Conservation Plan may be submitted to IDNR for up to thirty (30) days following the last publication of the newspaper notice. The rules also indicate that "…IDNR shall, upon receipt of written comments, transmit a copy of the comments to the applicant." As comments submitted on the Conservation Plan are received from IDNR, BDE will forward them to the district. The district, in consultation with BDE, will prepare a written summary in accordance with the requirements in the Incidental Taking rules. The summary will include a list of all persons or organizations making comments, a list of the criticisms, suggestions, and issues raised, and an analysis of each comment, including a description of any revisions to the Conservation Plan made in response to public comment. The written summary of comments should be completed as quickly as possible in order that it

can be submitted to the IDNR Office of Resource Conservation within ten (10) days after the close of the public comment period, as required by Section 1080.30 of the Incidental Taking rules.

7. The IDNR Office of Resource Conservation must complete its review of the Conservation Plan and issue its decision on the incidental taking authorization request within 120 days after the date of the first publication of the notice in the newspaper. IDNR may authorize the incidental taking if it finds that the taking will meet all requirements as stipulated in 17 Ill. Adm. Code 1080.40(a). If IDNR finds that the Conservation Plan does not meet all of the stipulated requirements, it may require additional terms and conditions to assure that the requirements will be met. BDE will coordinate with the district and IDNR as necessary to resolve any identified deficiencies in the Conservation Plan and to respond to any additional terms and conditions proposed by IDNR. Upon receipt of the written notice from IDNR concerning its decision on the incidental taking application, BDE will forward the notice to the district. Work that would cause the killing or injuring of an Illinois-listed animal species shall not be commenced until IDNR has issued an incidental taking authorization for the work.

BDE will be available to provide technical assistance to the district, as necessary, in implementing the approved Conservation Plan and any additional terms and conditions required.

Engineer of Design and Environment Michael L. Hine

Illinois Department of Transportation
2300 South Dirksen Parkway / Springfield, Illinois / 62764

BDE PROCEDURE MEMORANDUM

NUMBER: 32-03

SUBJECT: Changes in Section 4(f) Applicability for Actions Involving U.S. Coast Guard Permits

DATE: March 19, 2003

This memorandum supplements the information in Section 26-2.04 of the BDE Manual. The information in this memorandum will be incorporated in the Manual in a future update.

Section 4(f) of the Department of Transportation Act (49 USC 303), applies to agencies of the U.S. Department of Transportation (USDOT). Until recently, the U.S. Coast Guard (USCG) was a part of USDOT and, therefore, had responsibilities for administering Section 4(f) requirements, as applicable, on projects under its jurisdiction (e.g., actions requiring Section 9 permits for construction of bridges or causeways across navigable waters). The USCG has now been made a part of the Department of Homeland Security and, effective with this transfer, no longer has Section 4(f) responsibilities.

The USCG has advised that it will continue to evaluate Section 9 permit applications received prior to March 1, 2003 under Section 4(f) procedures that were in place when the applications were received. For any permit applications received after March 1, 2003, USCG will have no Section 4(f) responsibilities.

Engineer of Design and Environment Michael L. Hine

Illinois Department of Transportation
2300 South Dirksen Parkway / Springfield, Illinois / 62764

BDE PROCEDURE MEMORANDUM

NUMBER: 33-03

SUBJECT: Wetlands Compliance Procedures

DATE: July 11, 2003

BACKGROUND:

Federal Executive Order 11990 applies special requirements for addressing the impacts of federal projects on wetlands. Wetlands also are subject to regulation under the federal Clean Water Act (33 USC 1251-1376) as a part of the Section 404 permit process and the Section 401 Water Quality Certification requirements (33 CFR Parts 320 through 330). In addition, the Illinois Interagency Wetland Policy Act of 1989 (20 ILCS 830) and the implementing rules for the Act (17 Ill. Adm. Code 1090) address State policy for wetlands which is reflected in this Department's Wetlands Action Plan (attached) for compliance with the Act and rules.

These controls require project planners to avoid and minimize adverse impacts to wetlands as a first course of action and to compensate for any unavoidable adverse wetland impacts, typically by providing replacement wetlands acreage of comparable or better quality and type. These directives also require coordination with regulatory and natural resource agencies to evaluate the impacts of project alternatives and to determine appropriate compensation for any unavoidable adverse wetland impacts. The procedures in this memorandum address the key steps for compliance with the wetlands requirements and the documentation and coordination contacts associated with each step.

APPLICABILITY:

The procedures in this memorandum apply to the following:

All State highway projects which would:

(a) involve acquisition of additional right of way or easements (temporary or permanent);

(b) require a drainage structure runaround or any in-stream work;*

(c) potentially affect a recognized natural area/nature preserve or a location where a State-listed or Federal-listed species is known to occur; or,

(d) potentially affect a wetland within existing right-of-way, as identified through National Wetland Inventory (NWI) maps or other wetlands information source which the District Office possesses, and

Borrow, waste, and contractor-use areas.*

*(Note: For contractor-furnished borrow, waste, and use areas and for contractor-proposed drainage structure runarounds affecting areas beyond the limits of Phase I environmental surveys conducted for the project, BDE will perform the initial screening for wetlands as described in section 1, below. For any wetlands that will be potentially affected by these contractor-furnished facilities, the contractor will be responsible for obtaining delineations of the wetlands in accordance with the current Federal wetlands delineation manual. The contractor also will be responsible for complying with applicable permitting and compensation requirements for any unavoidable adverse wetland impacts resulting from these contractor-furnished facilities. The procedures in this memorandum are not intended to cover compliance actions for contractor-furnished facilities.)

PROCEDURES:

The following procedures establish the normal process and associated responsibilities for addressing wetland compliance issues.

1. <u>Identification and Description of Wetland Resources</u>

In response to submittal of an Environmental Survey Request form for a proposed project, BDE will use available information (e.g., National Wetland Inventory maps, aerial photos, soils maps) to determine whether wetlands are, or may be, present in the area the project will potentially affect. If the information clearly indicates that no wetlands are present in or near the project vicinity, BDE will provide the District a sign-off indicating that further compliance with the wetlands requirements will not be necessary unless the scope or location of the project changes such that it would potentially affect locations beyond the area previously reviewed and cleared for wetlands. The target turnaround time for this initial screening phase will be 45 days from the date the Environmental Survey Request form is received. If the information indicates there are, or may be, wetlands in or near the project vicinity, BDE will send the project for survey by the Illinois Natural History Survey (INHS). The target turnaround time for providing wetland delineations through the INHS will be six months to one year from the date the Environmental Survey Request form is received. If the INHS surveys delineate no wetlands in or near the project vicinity, BDE will provide the survey results to the District with a sign-off as described above. If the INHS surveys identify wetlands in or near the project vicinity, BDE will provide the wetland delineations and a wetland survey report to the District with a request for submittal of a Wetland Impact Evaluation (WIE) form when the extent of unavoidable adverse wetland impacts has been determined. Wetland delineation and classification will be in accordance with Section IV of the IDOT Wetlands Action Plan.

2. Analysis of Avoidance and Minimization Alternatives

When wetlands occur in the area a project will affect, the District must consider location and design alternatives to avoid and minimize adverse wetland impacts to the extent practical (including consideration of the "no action" alternative, alternative alignments, and design aspects such as steepening slopes, reducing median and lane widths, and using overland bridges to minimize encroachment into wetlands). This analysis will begin in the planning phase and shall continue as details are further developed in the design phase.

The environmental documentation for the project should include information on any measures taken to avoid and minimize adverse wetland impacts. To ensure that consideration is given to avoiding and minimizing wetland impacts as design work proceeds, the delineated boundaries of wetlands that will or could be affected by the project shall be shown on design plan sheets when the plans are prepared.

3. Wetland Impact Evaluation

The District must complete a WIE form and submit it to BDE for all projects that are surveyed for wetlands and determined to have wetlands within the study area. The WIE form should be submitted after the District has completed the analysis of avoidance and minimization alternatives and has determined the likely extent of unavoidable adverse wetland impacts the project will entail. The information in the WIE form will indicate whether or not the project involves unavoidable adverse wetland impacts and will provide the basis for determining whether it qualifies as a Programmatic Review Action or Standard Review Action. BDE will also use the information in the WIE form for tracking and periodic reporting on wetland impacts and avoidance of wetland impacts for IDOT projects, as required by the Interagency Wetland Policy Act and implementing rules.

If the project will avoid adverse wetland impacts, the WIE and the environmental documentation for the project should reflect the determination that adverse wetland impacts will not occur. BDE will provide a sign-off indicating that further action for compliance with State and Federal wetland requirements will not be necessary, unless the scope or location of the project changes such that wetlands would be adversely affected. If such changes occur, coordination with BDE should be reinitiated to determine the steps necessary for compliance.

For Programmatic Review Actions, BDE will respond to the WIE submittal to confirm the processing category and will confer with the District on options for providing the necessary compensation for unavoidable adverse wetland impacts. The target turnaround time for the BDE response to the WIE on Programmatic Review Actions will be 30 days from the date of receipt of the WIE form from the District. The decision on compensation will be documented and implemented as discussed in the following sections of these procedures.

For Standard Review Actions, BDE will coordinate the WIE form, delineations, and wetlands survey report with the Illinois Department of Natural Resources (IDNR), as required by the IDOT Wetlands Action Plan and 17 Ill. Adm. Code 1090.50(a)(1). Upon completion of IDNR's review, BDE will provide the District a copy of IDNR's response and will then confer with the District on options for providing the necessary compensation for unavoidable adverse wetland impacts. The target turnaround time for the response to the WIE on Standard Review Actions will be 120 days from the date of receipt of the WIE form from the District. The decision on compensation will be documented and implemented as discussed in the following sections of these procedures.

4. Compensation Plan Development

After the processing category and amount of anticipated unavoidable adverse wetland impacts have been established for a project, the compensation process can begin. Compensation for unavoidable adverse wetland impacts will be in accordance with the "Policy on Wetlands Impacts and Compensation" in Section V of the IDOT Wetlands Action Plan. (For projects requiring compensation under a Section 404 permit, the Corps of Engineers may, at its discretion, require different ratios on a case-by-case basis. The project will need to comply with the more stringent of the State or Federal compensation requirements.)

If the District and BDE decide to accumulate impacts smaller than 0.3 acre, BDE will document the decision and record the impact amount for tracking against the maximum thresholds for total amounts that can be accumulated as set forth in Section V of the IDOT Wetlands Action Plan. For Standard Review Actions, BDE will inform the IDNR of the decision to accumulate the impacts when the project is coordinated for IDNR review. This decision also should be reflected in the environmental documentation for the project. At such time as the District and BDE determine that accumulated impacts will be debited against a wetland bank or other approved source of wetlands credits, or addressed through inclusion in other project-related wetlands compensation, BDE will provide written notification to IDNR and will update the tracking records for accumulated impacts accordingly.

If the District chooses to pursue providing compensation on-site or from an existing source of wetlands credits for impacts less than 0.3 acre, preparation and processing of an appropriate compensation plan will be necessary, as described below.

For impacts equal to or greater than 0.3 acre, opportunities for on-site compensation must be considered before off-site compensation alternatives are proposed. In addition, options that are off-site but in-basin must be considered before out-of-basin alternatives are proposed. Use of wetland banks or other approved sources of pre-existing wetland credits may be proposed for impacts equal to or greater than 0.3 acre provided this "sequencing" requirement is satisfied.

A. Compensation through Use of Preexisting Wetland Credits

If the District proposes to provide compensation from a wetland bank or other approved source of wetlands credits, a compensation plan in accordance with Section VII A. of the IDOT Wetlands Action Plan will be required. The District should take the lead in preparing the compensation plan. BDE will be available to provide assistance, as needed. If the District proposes use of credits for compensation and credits from an approved IDOT wetland bank are not available, the District should take the lead in finding a suitable source of wetlands credits.

The District should submit one copy of the compensation plan to BDE for review. After BDE review of the compensation plan and resolution of any concerns identified, BDE will coordinate the plan in accordance with Section VI of the IDOT Wetlands Action Plan. Processing steps and timeframes for IDNR response will be as described in the IDOT Wetlands Action Plan. The environmental documentation for the project should summarize the information from the compensation plan and should include evidence of IDNR concurrence in the plan for projects classified as Standard Review Actions.

B. Compensation through Wetlands Restoration, Enhancement, and/or Creation

If compensation will be provided through wetlands restoration, enhancement, and/or creation, the District should take the lead in locating a suitable compensation site(s), giving appropriate consideration to the effect of the applicable compensation ratios on the amount of compensation needed. In selecting potential sites for wetland restoration, the District also should give careful consideration to the need for using sites that contain a majority of hydric soils [see Section 59-7.07(a) of the *Bureau of Design and Environment Manual*]. The district should take the lead in preparing the compensation plan. BDE will be available to provide assistance, as needed.

After the District has identified one or more potential compensation sites, it should submit information to BDE to request a more detailed assessment of the suitability of the sites for wetland compensation purposes. The information provided to BDE should include a map (7.5' topographic map or plat map) showing the location and boundary of the site(s) and should also indicate the size and current ownership of the site(s). In response to this submittal, BDE will make a preliminary site suitability evaluation, based on soils information. If BDE has concerns about the suitability of the site based on this preliminary evaluation, it will confer with the District before proceeding with any further studies or evaluations of the site. If BDE does not identify any immediate site suitability concerns, or if its concerns are resolved, it will forward the information to the Illinois Natural History Survey (INHS) and the Illinois State Geological Survey (ISGS), as appropriate, and have them conduct

further investigations of the hydrology, soils, vegetation, and adjacent land use for the proposed site. (As necessary, BDE will contact the District to confirm that landowner permission has been obtained or that written notification has been provided to the landowner prior to having the INHS/ISGS proceed with the on-site investigations.) BDE will forward the results of the site assessments to the District with recommendations on the suitability of the site for wetland restoration or creation.

For sites that the District wishes to continue to pursue, an Environmental Survey Request form should be submitted to BDE to initiate evaluations of the site for cultural resources and for screening against the Natural Heritage database for endangered and threatened species or Illinois Natural Area Inventory sites. The District should also evaluate the site for special waste in accordance with the procedures in Section 27-2 of the *Bureau of Design and Environment Manual.* For sites on agricultural land, the District will need to coordinate with the Natural Resources Conservation Service of the U.S. Department of Agriculture to obtain certification on the status of wetlands on the site (e.g., prior-converted wetlands, farmed wetlands).

After completion of site evaluations and any necessary coordination for cultural resources, endangered species/natural areas, or special wastes, the District and BDE should confer regarding the suitability of the site for use prior to preparing the conceptual compensation plan or initiating property negotiations with the landowner.

1. <u>Conceptual Compensation Plan</u>

After conferring with BDE and deciding to proceed with proposing use of a particular site for compensation, a conceptual compensation plan should be prepared in accordance with the outline in Section VII B. of the IDOT Wetlands Action Plan and the following:

a. In the description of the proposed wetland compensation site(s), include an indication of its current vegetation characteristics.

b. The conceptual compensation plan should include a description of the monitoring plan that will be used to evaluate the success of the compensation, including the use of measures to correct identified deficiencies or problems. (Monitoring of restored or created wetlands should commence the growing season after completion of the work for the restoration/creation. Compensation projects larger than one acre will be monitored for five years. Compensation projects of one acre or less will be monitored for three years. All monitoring will be conducted by the INHS, through BDE. BDE will accomplish any required coordination of monitoring reports with IDNR and the Corps of Engineers.)

c. The conceptual compensation plan should include a description of the operation, management, and maintenance plan for the site, including procedures to restrict further adverse impacts to the site (such as the use of buffer areas, restricting highway project or other incompatible construction within the wetland compensation area, etc.)

The District shall submit one copy of the conceptual plan to BDE for review. As a part of the initial review, BDE may confer with the Corps of Engineers or the U S Fish and Wildlife Service (USFWS), or both, on a case-by-case basis to obtain a preliminary reaction to the conceptual plan prior to proceeding with further reviews. Any concerns or comments from these agencies will be relayed to the District. After BDE review of the conceptual compensation plan and resolution of any concerns identified, BDE will provide the plan to IDNR for concurrence in accordance with Section VI of the IDOT Wetlands Action Plan. Processing steps and timeframes for response will be as described in the IDOT Wetlands Action Plan. The project environmental documentation should summarize the details of the conceptual compensation plan as concurred in by IDNR. On projects for which an Environmental Impact Statement is prepared, a summary of the conceptual compensation plan information should be in the draft and final statement. If an Environmental Assessment is prepared, the summary conceptual compensation plan information should be in the document when it is made available for public and agency review. If the project qualifies as a Categorical Exclusion, a summary of the conceptual compensation plan information should be in the Phase I engineering report prior to design approval. For projects processed under the ECAD procedures, the conceptual compensation plan information also should be summarized in the ECAD Record.

2. <u>Compensation Design Plan</u>

After the conceptual compensation plan has received the necessary concurrence from IDNR, appropriate information and details for the approved compensation plan should be included in the project design plans. The District should continue to analyze and incorporate, as practical, ways to avoid and minimize adverse wetland impacts as plan preparation progresses. (As a part of the design-phase compensation plan work, the District should proceed with development of any necessary Agreement with the entity or entities that will assume responsibility for long-term management of the compensation wetlands. The Agreement should be submitted to BDE as far in advance of the target letting date for the project as practical.) As appropriate, the design plan documents should include the following details for compensation to be provided through wetland restoration, enhancement, and/or creation.

a. Earthwork: Grading plan with contours of final grading elevations, staging and method of grading, and topsoil stockpile site(s), (unless at contractor's discretion).

b. Planting plan and specifications: Species list, quantities, sizes, form (container-grown, bare root, cutting, sprig), spacing, grouping, staking requirements, timing of planting, weed control, etc.

c. Hydrology: Inflow and outflow points and water control structures.

d. Work schedule: The plans and specifications must reflect the timing of each construction phase for the wetland compensation site as required to ensure the successful establishment of wetland hydrology, plant materials, etc. **The wetlands compensation work should commence prior to or concurrent with the highway project construction work that causes the adverse wetlands impacts requiring the compensation** (i.e., compensation for wetland impacts that would occur under the first contract of a project should commence prior to or concurrent with the work under that contract and should not be put off to be addressed under a subsequent contract.)

e. Special measures: A description should be included in the special provisions or plan notes for any special measures that will be implemented during construction of the wetland compensation site to avoid or minimize unnecessary construction-stage impacts to existing wetlands (e.g., designation of "no-work" areas, restrictions on utility relocation/accommodation that could affect wetlands, placement of geotextile fabric to prevent permanent compaction of wetland soils) and to correct temporary impacts that may occur (e.g., restoration of pre-construction contours, replanting or reseeding of areas in which wetlands vegetation is disturbed or destroyed). The plans also should include notations as necessary to ensure that the wetland compensation site will not be used as a construction staging area, concrete recycling site, temporary stockpile site for spoil soils or topsoil, or other such construction-related uses.

f. Notification to BDE: The plans must include provisions for notifying BDE to facilitate monitoring and reporting on progress in accordance with the approved conceptual compensation plan. This must include notification when the wetlands compensation site construction work begins and when it is completed. In addition, the plans must provide for contacting the BDE Natural Resources Unit regarding any field changes that would affect the approved wetlands compensation plan in order that the changes can be coordinated with IDNR, as necessary, prior to implementation.

The information on hydrology should be described in the plan notes and shown on the plan sheets for grading work. Planting information should be shown on plan sheets for the planting work and in appropriate specifications. Estimates of quantities should be shown in the same way as those for highway construction to provide guidance to contractors bidding on the work. District personnel responsible for plan preparation

should work closely with the District personnel and others, as appropriate, that were involved in the development of the wetlands compensation plan to ensure that the components of the compensation work are completely and accurately reflected in the plans.

The plan information for the wetlands compensation work should be submitted to BDE for review at 50% completion and at 100% completion. The District should address these submittals to the attention of the BDE Natural Resources Unit or should notify the BDE Natural Resources Unit by phone or e-mail when these submittals are being sent. One of these submittals must include an indication of the date the contract that will include the compensation site work is scheduled for letting. If the scheduled letting date subsequently changes, the BDE Natural Resources Unit should be notified. For project tracking purposes, the District also should notify the BDE Natural Resources Unit when the contract involving the wetland compensation site work is awarded and should advise that Unit of the anticipated date that construction work for the compensation site will begin.

When BDE receives the wetlands compensation plan information for review at 100% completion, it will coordinate the plan with IDNR for approval in accordance with Section VI of the IDOT Wetlands Action Plan. Approval also may be required from the Corps of Engineers (and the Corps may want to provide the plan to the USFWS for review and comment prior to making its decision). BDE will coordinate the compensation design plan to obtain the necessary approvals.

When the necessary approvals are received from IDNR and, as appropriate, the Corps of Engineers, BDE will provide the District with documentation of the approvals. The validity period for IDNR's approval of the compensation plan will be as stipulated in Section VI.B of the IDOT Wetlands Action Plan. If the District does not commence implementation of the compensation plan (i.e., acquire the mitigation site and/or begin the earthwork, planting, or other work necessary for the wetland restoration, enhancement, and/or creation) within three years of IDNR's approval, BDE should be contacted to request a reevaluation of site conditions. BDE will reinitiate evaluations of the site by the INHS and/or ISGS, as necessary, and will confer with the District on any changes needed in the compensation plan. BDE will re-coordinate the plan with IDNR, and, as necessary, with the Corps of Engineers, before implementation of the compensation plan may commence.

For projects involving wetland compensation work, it may be beneficial to provide for a pre-bid conference to afford an opportunity to answer any questions regarding the compensation plan.

5. Compensation Plan Implementation

Once the compensation plan has received any needed approvals from IDNR and the Corps of Engineers, the District may proceed with actions necessary to implement the plan. **Projects involving adverse wetlands impacts should not proceed to letting until the wetland compensation plan has been approved.**

A. Compensation Plan for Use of Preexisting Wetland Credits

When the approved plan calls for use of credits from an IDOT bank site, the District and BDE will coordinate to accomplish the necessary accounting for the application of credits on the project. When the approved plan calls for acquiring credits from a commercial bank or other outside source, the District should proceed with the actions necessary to secure the credits for the project. (Piecemeal acquisition of compensation credits for a project is discouraged. To the fullest extent practical, all of the compensation credits required for a project should be provided/acquired concurrently.) The credits must be provided/secured before the associated adverse wetland impacts occur. Once the credits are secured, written confirmation must be provided to BDE to verify compliance with the terms of the approved compensation plan. For purchase of credits from commercial banks, the written confirmation must include documentation from the bank owner/manager indicating that the credits have been purchased. BDE will coordinate the written confirmation with the IDNR and the Corps of Engineers, as necessary.

B. Compensation Plan for Wetlands Restoration, Enhancement, and/or Creation

When compensation will be provided through wetlands restoration, enhancement, and/or creation, careful oversight will be required to ensure that the compensation plan is implemented as approved, including any long-term monitoring and reporting required. **(Implementation of the wetlands compensation site construction work should commence prior to or concurrent with the contract for the highway project construction work that causes the adverse wetlands impacts requiring the compensation.)** This oversight responsibility will apply throughout construction of the compensation site and beyond until success criteria have been met and the compensation site is transferred for long-term management. The considerations described below should be addressed as implementation of the compensation plan proceeds (e.g., through District procedures for tracking and follow-through on commitments, or other suitable means). BDE will have ongoing involvement in the oversight for monitoring activities and in the coordination of the results of those activities with the IDNR and Corps of Engineers, as appropriate.

1. Land Acquisition Phase

a. Parcels necessary for accomplishing the wetlands compensation work should be acquired in a timely manner to facilitate conducting the wetlands work at the proper time in the project construction schedule.

b. If the property will be transferred to an entity other than the IDNR, suitable deed restrictions, conservation easements, or other enforceable legal mechanisms must be included in the documents for transfer of compensation wetlands to prevent future activities at the site(s) that would be incompatible or potentially harmful to the wetlands.

2. Construction Phase

a. It may be beneficial for the pre-construction conference on the project to include discussion of logistics and other issues relating to the wetland compensation plan, as necessary to promote understanding of the objectives of the plan and to respond to any questions or concerns. Depending upon the complexity of the compensation plan, consideration should be given to inviting BDE and District staff that were involved in development of the compensation plan, as well as the planting contractor or other special sub-consultants that will be involved in the wetlands work. The following topics may be appropriate for discussion:
   i. Scheduling in relation to other project construction work
   ii. No-work areas (e.g., existing wetlands or other areas to be avoided)
   iii. Topsoil stockpile sites
   iv. Utility relocation/accommodation issues

b. BDE must be notified at key points in implementation of the wetland compensation plan to facilitate appropriate monitoring and reporting on progress in accordance with the provisions in the approved compensation plan. This must include notification when the wetlands compensation site construction work begins and when it is completed. The notification when the work is finished shall occur within 30 days of completion, and prior to closing out the contract, to afford time for a final check of the site and to allow for accomplishing any associated corrective measures that may be necessary. In response to this notification, BDE will provide a compensation site post-construction evaluation report to IDNR, as required by the IDOT Wetlands Action Plan and the implementing rules for the Interagency Wetland Policy Act.

c. Any proposed field changes that would affect components of the wetland compensation as approved by IDNR and the Corps of Engineers must be coordinated with the BDE Natural Resources Unit prior to proceeding. As necessary, BDE will confer with IDNR and the

Corps of Engineers regarding the effect of the proposed changes on the approved wetland compensation plan.

3. Operations Phase

a. When BDE receives notification from the District that activities for construction of the wetland compensation site have been completed, it will task the INHS and ISGS to begin monitoring of the site in accordance with the monitoring plan component of the compensation plan approved by IDNR and the Corps of Engineers. BDE will review the monitoring reports and then transmit them to the District, with copies to IDNR and the Corps of Engineers, as appropriate. The transmittals and monitoring reports will identify any needed management or maintenance measures for the wetland site and will include an assessment of the progress toward attainment of the site performance standards. The District will be responsible for accomplishing any identified management and/or maintenance measures in accordance with the site management component of the approved wetland compensation plan. BDE will be available to provide guidance as needed.

b. Districts must ensure that maintenance personnel are aware of the location and limits of wetland compensation sites that could be affected by maintenance operations. Wetland compensation sites adjacent to highway rights-of-way must be protected from mowing, weed spraying, or other operations activities where those activities would adversely affect the wetlands.

c. When the monitoring reports indicate that site performance standards have been attained, BDE will include a request for final approval of the compensation site in the transmittal of the monitoring information to IDNR and the Corps of Engineers. The request will offer the option for either agency to request an on-site meeting to inspect the compensation area prior to giving approval. BDE will coordinate with the District on arrangements for on-site meetings, if requested. After IDNR and the Corps of Engineers have approved the compensation site, monitoring will be terminated and the District may begin the process of transferring the site for long-term management. District and central Land Acquisition Bureaus must ensure that transfer of wetlands compensation sites for long-term management complies with Section XI of the IDOT Wetland Action Plan and the provisions of any agreements executed with the entity that is to receive the site.

6. Development of IDOT Wetland Banks

Districts may propose development of IDOT wetland banks for use in providing compensation credits for offsetting unavoidable adverse wetland impacts resulting from highway projects. The following procedures will apply.*

* *If the proposed IDOT wetland bank will be within an area covered by an area-specific Federal or State interagency agreement or directive governing wetland banking activities (e.g., the "Interagency Coordination Agreement on Wetland Mitigation Banking Within the Regulatory Boundaries of Chicago District, Corps of Engineers"), the provisions of that agreement or directive will govern to the extent that its requirements are different from the details in this part of the Wetlands Compliance Procedures. BDE will be available to provide assistance as necessary for complying with applicable alternative requirements and still should be involved in review of information prepared for evaluation of potential banking sites and information for development of the bank prospectus and banking instrument/charter. In addition, BDE still should be involved in coordinating information regarding development of the prospectus and banking instrument with Mitigation Bank Review Team (MBRT) agencies as discussed in these procedures.*

A. Site Identification and Evaluation

The District should take the lead in identifying proposed sites for IDOT wetland bank development. The Corps of Engineers district offices and the local offices of the USFWS, Natural Resources Conservation Service, and IDNR may be able to provide useful information on potential bank sites in their area of jurisdiction. Districts should be aware that some Corps of Engineers district offices may stipulate minimum sizes for banks that will be used to provide compensation credits under the Section 404 permit requirements. Districts should confer with the Corps of Engineers district office(s) that have jurisdiction to determine the nature and applicability of any such constraints.

As with proposed sites for wetlands restoration, enhancement, or creation, after the District has identified a site it wishes to pursue for use as a wetland bank, it should submit information to BDE to request a more detailed assessment of the suitability of the site for wetland compensation purposes. The information provided to BDE should include a map (7.5' topographic map or plat map) showing the location and boundary of the site and should also indicate the size and ownership of the site. In response to this submittal, BDE will make a preliminary site suitability evaluation, based on soils information. If BDE has concerns about the suitability of the site based on this preliminary evaluation, it will confer with the District before proceeding with any further studies or evaluations of the site. If BDE does not identify any immediate site suitability concerns, or if its concerns are resolved, it will forward the information to the INHS and ISGS, as appropriate, and have them conduct further investigations of the hydrology, soils, vegetation, and adjacent land use

for the proposed site. (As necessary, BDE will contact the District to confirm that landowner permission has been obtained or that written notification has been provided prior to having the INHS/ISGS proceed with the on-site investigations.) BDE will forward the results of the site assessments to the District with recommendations on the suitability of the site for wetland banking purposes.

For sites which the District wishes to continue to pursue, an Environmental Survey Request form should be submitted to BDE to initiate evaluations of the site for cultural resources and for screening against the Natural Heritage database for endangered and threatened species or Illinois Natural Area Inventory sites. The District should also evaluate the site for special waste in accordance with the procedures in Section 27-2 of the *Bureau of Design and Environment Manual*. For sites on agricultural land, the District will need to coordinate with the Natural Resources Conservation Service of the U.S. Department of Agriculture to obtain certification on the status of wetlands on the site (e.g., prior-converted wetlands, farmed wetlands).

B. Mitigation Bank Prospectus

To initiate the planning and review process with outside agencies for a proposed bank site, the District will be responsible for preparing a Mitigation Bank Prospectus. Preparation of the prospectus should not begin until site evaluations and any necessary coordination for cultural resources, endangered species/natural areas, or special wastes have been completed and the District and BDE have conferred regarding suitability of the site for banking purposes. After the District and BDE confer and decide to proceed with proposing use of a site for wetland banking purposes, BDE will contact the appropriate Corps of Engineers district(s) and IDNR to obtain their preliminary views on the proposal. BDE will provide the District any information or views provided by the Corps and IDNR for consideration in preparing the prospectus in accordance with the outline below. BDE will be available to provide assistance, as needed.

<u>Prospectus Content</u>

The prospectus provides information that IDNR and the Corps of Engineers will use to evaluate the need for, and technical feasibility of, a proposed mitigation bank. The prospectus should contain the following information:

- The site location, size, and legal description
- A delineation of any wetlands or other jurisdictional areas that may exist at the proposed bank location

- The type of real estate interest proposed for the bank site

- The type of bank proposed (e.g., government agency bank for use in offsetting unavoidable adverse wetland impacts of highway projects)

- The method of credit production (e.g., restoration, creation, enhancement, preservation), the number of credits to be produced by each method, and the rationale for crediting

- A general site plan showing the location of all existing and proposed wetland and upland habitats, roads, trails, structures, utilities, and any other existing or proposed site improvements

- A preliminary bank site construction plan and schedule of completion, preliminary planting plan, and preliminary administrative, management, and monitoring plans

- An outline of management and maintenance responsibilities

(For bank site proposals within the Chicago District of the Corps of Engineers, the prospectus also must include a statement regarding compliance with the "Interagency Coordination Agreement on Wetland Mitigation Banking within the Regulatory Boundaries of Chicago District, Corps of Engineers.")

The District should submit one copy of the prospectus to BDE for review. After BDE review of the prospectus and resolution of any concerns identified, BDE will coordinate the prospectus with the Corps of Engineers and IDNR. After the Corps of Engineers and IDNR have responded to the prospectus, the District and BDE will confer on whether to continue to pursue acquisition and development of the proposed bank site. When it is decided that a site will be acquired and established as a bank, the District should proceed with preparation of a Mitigation Banking Instrument, in accordance with the outline below.

C. Mitigation Banking Instrument

All mitigation banks must have mitigation banking instruments to document concurrence of all the responsible State and Federal agencies in the objectives and administration of the banks. This will include IDOT, the IDNR, the Corps of Engineers, the U S Environmental Protection Agency (USEPA), and the USFWS. The banking instrument will document in detail the physical and legal characteristics of the bank and how the bank will be established and operated. The District will be responsible for preparing the Mitigation Banking Instrument. BDE will be available to provide assistance, as needed.

Mitigation Banking Instrument Content

The mitigation banking instrument should address the following items:

- Bank goals and objectives
- Ownership of bank lands
- Bank size and classes of wetlands and/or other aquatic resources proposed for inclusion in the bank, including a site plan and specifications
- Description of baseline conditions at the bank site
- Geographic service area
- Wetland classes or other aquatic resource impacts suitable for compensation from the bank
- Methods for determining credits and debits
- Accounting procedures
- Performance standards for determining credit availability and bank success
- Reporting protocols and monitoring plan
- Contingency and remedial actions and responsibilities (if performance standards are not being met)
- Compensation ratios
- Provisions for long-term management and maintenance

The District should submit one copy of the Mitigation Banking Instrument to BDE for review. After BDE review of the Mitigation Banking Instrument and resolution of any concerns identified, BDE will coordinate the document with the Corps of Engineers, the IDNR, the USEPA, and the USFWS. These agencies generally will constitute the MBRT for mitigation banking proposals in Illinois. After review by the MBRT and resolution of any concerns identified, BDE will coordinate the Mitigation Banking Instrument for final execution. The Secretary of IDOT and a representative of each of the agencies on the MBRT will sign the Mitigation Banking Instrument. BDE will provide the District a copy of the executed Mitigation Banking Instrument and will advise that implementation of the steps to establish the bank may proceed.

D. Mitigation Bank Implementation

After approval to proceed with implementation of the mitigation bank proposal, the District may initiate property negotiations for acquiring the site and may proceed with arrangements for any site work necessary to establish wetlands credits. Careful oversight will be required to ensure that the provisions of the Mitigation Banking Instrument are implemented as approved, including any long-term monitoring and reporting required. BDE should be involved as implementation proceeds, as necessary to accomplish monitoring to ensure consistency with the approved bank plan and to evaluate progress toward establishment of mitigation credits. BDE also will be involved in reporting to the MBRT on implementation of the mitigation bank, in accordance with the reporting protocols in the Mitigation Banking Instrument.

Engineer of Design and Environment Michael L. Stone

Attachment

Illinois Department of Transportation
WETLANDS ACTION PLAN
April 15, 1998

4/15/98 — IDOT Approval — Date

21 Apr 98 — IDNR Approval — Date

I. Purpose

The purpose of this Action Plan is to set forth a framework of policy and procedures for the Illinois Department of Transportation (IDOT) that will establish compliance with the goals of the Interagency Wetland Policy Act of 1989 (the Act) and the "Implementing Procedures for the Interagency Wetland Policy Act" (17 Ill. Adm. Code 1090).

II. Applicability

This Action Plan applies to all IDOT and IDOT pass-through funded projects involving adverse impacts to wetlands except those actions specifically exempted. Approvals to proceed with construction of non-exempted actions adversely affecting wetlands will be contingent on demonstrating compliance with this Plan. For IDOT pass-through funded projects, the entity receiving the pass-through funds will be responsible for complying with the provisions of this Plan. For such projects, IDOT may require the entity receiving the pass-through funds to assume responsibility for necessary wetlands-related studies and coordination with the Illinois Department of Natural Resources (IDNR) which this Plan describes as IDOT responsibilities.

In accordance with 17 Ill. Admin. Code 1090.20 (Implementing Procedures for the Interagency Wetland Policy Act), actions that may involve adverse wetlands impacts include, but are not limited to:

- The alteration, removal, excavation, or dredging of soil, sand, gravel, minerals, organic matter, vegetation, or naturally occurring materials of any kind from a wetland;
- The discharge or deposit of fill material or dredged material into a wetland;
- The alteration of existing drainage characteristics, sedimentation patterns, or flood retention characteristics of a wetland;
- The disturbance of the water level or water table of a wetland;
- The destruction or removal of plant life that would alter the character of a wetland, except for activities undertaken in accordance with the Illinois Noxious Weed Act; and
- The transfer of State-owned wetlands to any entity other than another State agency.

Compliance with this Action Plan is not required for any construction, land management, or other activity funded or performed by IDOT which will *not* result in an adverse impact to a wetland. In addition, in accordance with 17 Ill. Admin. Code 1090.20, the following activities also are specifically excluded from the State wetlands compliance requirements:

- Activities undertaken for the maintenance of existing ponds, storm water detention basins and channels, drainage ditches or navigation channels
- Installation of signs, lighting and fences and the mowing of vegetation within existing maintained rights-of-way, provided such actions do not jeopardize the existence of a

threatened or endangered species, Illinois Natural Area Inventory Site, or the designated essential habitat of a threatened or endangered species
- Repair and maintenance of existing buildings, facilities, lawns, and ornamental plantings
- Issuance of permits and licenses
- Construction projects that were let for bidding prior to May 6, 1996
- Application of media (including deicing chemicals) on the surface of existing roads for the purposes of public safety
- Non-surface disturbing surveys and investigations for construction, planning, maintenance or location of environmental resources

After initial approval by IDNR, this Plan shall continue in effect, subject to renewal through IDNR every 4 years in accordance with 17 Ill. Adm. Code 1090.40(d).

III. Consistency with Existing IDOT Policies and Procedures

Upon acceptance by IDNR, this Action Plan becomes IDOT's framework for compliance with the Interagency Wetland Policy Act. To the extent that there are any inconsistencies between this Plan and existing IDOT Departmental Orders, policies, and operating procedures regarding wetlands, this Action Plan supersedes such Orders, policies, and procedures until they are revised to achieve consistency.

IV. Identification and Delineation of Wetlands

At the earliest practical stage in the project planning process, an assessment will be made of the extent to which wetlands will be affected. Unless an Illinois-specific manual is available and approved for use, the current approved federal manual for identifying and delineating wetlands shall be used as the basis for determining wetlands subject to the Act. Wetlands shall be categorized according to the types listed in Appendix B. Additional regulatory guidance issued by the Corps of Engineers for the federal wetlands manual (e.g., concerning the treatment of farmed wetlands) also will be followed, as applicable. The most recent version of the "National List of Plant Species that Occur in Wetlands" published by the U S Fish and Wildlife Service will be used to determine hydrophytic vegetation. The most recent list of hydric soil map units maintained by each county Natural Resources Conservation Service Office will be used when locating areas of hydric soils.

The National Wetlands Inventory (NWI) maps and wetland maps that may be produced by local jurisdictions shall be used in determining the need to undertake field surveys to delineate and evaluate wetlands affected by IDOT or IDOT pass-through funded projects. Consideration also shall be given to the location of the project in the landscape and the proposed scope of work. Where wetlands are likely to occur and where such wetlands could be affected by the proposed project, field investigations shall be conducted to verify the presence of wetlands and to delineate any wetlands in the area the project may affect.

V. Policy on Wetlands Impacts and Compensation

Each Division of IDOT responsible for activities subject to the requirements of this Action Plan shall ensure that its policies and operating procedures reflect the following sequence of actions

for addressing adverse wetlands impacts while giving due consideration to safety and appropriate design standards:

First priority: Avoidance of adverse wetland impacts.

Second priority: Minimization of adverse wetland impacts.

Third priority: Compensation for unavoidable adverse wetland impacts in accordance with the ratios in 17 Ill. Admin. Code 1090.50 c 8.

Wetland impacts of less than 0.3 acre resulting from IDOT or IDOT pass-through funded projects will be compensated for from a wetland compensation account site or other approved source of preexisting wetland credits (e.g., commercial wetland bank), or may be accumulated for compensation in a larger compensation site or sites. In either case, the compensation will be subject to the applicable ratios specified in 17 Ill. Admin. Code 1090.50 (c) (8). Opportunities to compensate for accumulated impacts will be pursued, as practical, when developing project-specific wetlands compensation for larger impacts, when new wetland compensation account/bank sites become available for use, or when establishment of a site or sites to offset accumulated impacts is determined appropriate as a stand-alone project.

Any accumulated acres of impact associated with IDOT or IDOT pass-through funded projects will be accounted for on the basis of the boundaries of the nine IDOT highway districts. IDOT will confer with IDNR at least once each year regarding the status of any accumulated impact balances in each of the IDOT highway districts and the status of compensation to offset the accumulated balances. The total of accumulated acres of impacts at any given time shall not exceed 5 acres in any IDOT highway district or 25 acres statewide. If accumulated balances approach either of these thresholds, IDOT will confer with IDNR to decide how compensation will be provided to reduce the accumulated balances.

Compensation for unavoidable adverse impacts of 0.3 acre or more, will be provided prior to or concurrent with the project action causing the wetland impact. In proposing such compensation for IDOT or IDOT pass-through funded projects, priority shall be given to locating the compensation close to the impacted wetlands to the extent practical. In evaluating the practicality of sites for potential use, the following will be considered:

A. The site must be suitable for establishment of wetlands; i.e., contain hydric soils and be capable of providing suitable wetlands hydrology.
B. IDOT, or the local agency responsible for an IDOT pass-through funded project, must be able to acquire the site for wetlands compensation purposes (i.e., for sites that are not adjacent to existing or proposed project right-of-way, either the site must have a willing seller or IDNR will provide written documentation confirming suitability of the site for use, in order to support condemnation action by IDOT, or local agency, in the case of an IDOT pass-through funded project).
C. For sites that are not adjacent to existing or proposed project right-of-way, it must be possible for an agreement to be reached for transferring jurisdiction and responsibility for long-term management to the IDNR or another entity that meets the requirements of 17 Ill. Admin. Code 1090.90. (IDOT or a local highway agency ordinarily will assume

responsibility for long-term management of sites adjacent to existing or proposed highway rights-of-way.)

When adverse wetlands impacts occur, one-for-one replacement of new wetlands of comparable functional type and size will be provided through wetlands restoration or creation before acquisition or research alternatives are considered. Buffer areas may be included for compensation credit when such areas are important to the protection of the compensation wetlands and the maintenance of their functions. The amount of credit allowed for buffer areas will be determined in consultation with IDNR on a case-by-case basis.

If a wetland compensation plan that meets the objectives of the Act cannot be developed, or if unique opportunities exist to further the goals of the Act through other means, approval may be requested from IDNR for the following:

- Acquisition of high quality wetlands and associated buffer;
- Funding of needed relevant research; or
- Wetlands compensation that provides replacement of the same and different wetland types as the adversely impacted wetlands.

Consistent with the requirements of the Interagency Wetland Policy Act, IDOT Divisions shall consider opportunities for increasing the quantity and quality of the State's wetlands resources as a component of ongoing operations to augment the amounts of wetlands provided through compensatory mitigation. These opportunities will be pursued primarily through cooperative initiatives with the IDNR. Such opportunities will be assessed for practicality and implemented as funding and manpower resources allow.

In identifying and evaluating potential sites for IDOT wetlands compensation accounts or other project-specific wetlands compensation, IDOT will coordinate with IDNR to obtain information as appropriate on potential sites that would be suitable for establishment of wetlands and that would complement IDNR natural resource programs and property management objectives. IDOT will consider the information from IDNR along with information obtained from other sources in proposing sites for approval. As practical, IDOT will give priority to pursuing the sites that would complement IDNR programs and objectives in developing compensation for IDOT projects.

VI. Processing Procedures

Project coordination with IDNR for actions subject to this Action Plan will be in accordance with the "Natural Resource Review and Coordination Agreement Between IDNR and IDOT," as executed in January 1996, or as subsequently amended, and the procedures in this section.

When potential impacts are identified, alternatives for avoiding and minimizing adverse impacts will be analyzed, consistent with applicable design standards and safety considerations. When the analysis of alternatives determines that the project will involve unavoidable adverse wetland impacts, IDOT will coordinate wetlands issues with IDNR in accordance with the following:

A. Programmatic Review Actions

For purposes of this Action Plan, Programmatic Review Actions are those which involve impacts to wetlands only in areas where construction is within existing rights-of-way or in new right-of-way which is contiguous to (i.e., does not separate from) the existing right-of-way and for which there is no practicable alternative which would avoid adverse wetlands impacts. Examples of project-types that could qualify as Programmatic Review Actions if they meet the preceding criteria include, but are not limited to, the following: adding through or auxiliary lanes to an existing highway, widening and resurfacing existing pavements, widening shoulders on an existing highway, realigning an existing intersection, reconstructing or replacing an existing bridge, constructing runaround detours or temporary stream crossings, and installing scour countermeasures (e.g., flexible revetment, rigid revetment, or flow control structures) for existing bridges.

Adverse wetland impacts resulting from Programmatic Review Actions will be compensated in accordance with the "minimal alteration" ratios specified in 17 Ill. Admin. Code 1090.50 c 8 except when the affected wetlands involve any of the factors specified in that section as requiring application of a 5.5:1 ratio.

For projects which qualify as Programmatic Review Actions, project-specific coordination with IDNR for wetlands compliance generally will not be required. However, when the work involving wetlands will require coordination with the Corps of Engineers for approval of a wetlands compensation plan, IDOT will provide information describing the proposed compensation to IDNR. This submittal will allow appropriate IDNR staff the opportunity to review and comment on the proposed compensation prior to receiving the compensation plan information as a part of the permit information from the Corps. In addition, IDOT will provide IDNR periodic lists of all projects that qualified as Programmatic Review Actions and were not coordinated with IDNR. The lists will be provided quarterly during the first year of operation under this Wetlands Action Plan, semiannually during the second year of operation, and annually thereafter. The lists will include the following information for each Programmatic Review Action:

- Project name/number
- Project type and location
- NWI classification code for each wetland affected
- Approximate size of the wetlands area(s) to be adversely affected by the project
- Description of compensation
- Current status and anticipated year of construction

IDOT will maintain complete files on all actions processed under this programmatic procedure. These files will be made available for audit by IDNR upon request.

For each Programmatic Review Action in which compensation will be provided through wetlands restoration or creation on a project-specific basis, IDOT will provide periodic monitoring reports in accordance with Section X of this Plan. IDOT also will notify IDNR at the end of the wetland compensation monitoring period to advise that the compensation work has been completed and to report on its success.

B. Standard Review Actions

For purposes of this Plan, Standard Review Actions are projects which involve unavoidable adverse wetlands impacts and which do not qualify as Programmatic Review Actions. Consultation with IDNR regarding wetlands shall occur on a project-by-project basis for Standard Review Actions. As the initial step in the wetlands coordination process for Standard Review Actions, IDOT will submit a Wetland Impact Evaluation to IDNR. This evaluation will be submitted after the analysis of avoidance and minimization alternatives has been completed and the anticipated location and extent of any unavoidable adverse wetlands impacts has been determined. The Wetland Impact Evaluation will include the following:

- Information identifying the wetland site(s) affected and the relationship to the proposed action (including wetland delineation report(s), forms, and map(s), and NWI map(s) for the project area);

- Information describing the proposed work affecting each individual wetland (e.g., placement of fill, excavation, draining, removal of vegetation) in sufficient detail to allow a thorough review of the potential adverse wetlands impacts;

- Anticipated starting and ending dates for the project, if known;

- Indication of the total acreage expected to be converted from wetland habitat to other use(s); and

- Description of alternatives considered and an explanation of why there are no practicable alternatives to the proposed action.

Within 30 days of receipt of the Wetlands Impact Evaluation, IDNR will advise IDOT of any deficiencies in the information provided. IDNR will notify IDOT in writing of the date the Wetlands Impact Evaluation is deemed filed. Unless extended by written agreement between IDOT and IDNR, IDNR will complete its review of the Wetland Impact Evaluation within 60 days of the date it is deemed filed and will respond in accordance with 17 Ill. Adm. Code 1090.50 (a)(2). IDOT may request a reevaluation of IDNR's response in accordance with 17 Ill. Adm. Code 1090.50 (a)(2)(D). IDNR's final response to the Wetland Impact Evaluation will be valid for 3 years and shall be extended by IDNR upon demonstration that the project is being pursued in good faith and the conditions of the site have remained substantially unchanged.

For unavoidable adverse wetlands impacts resulting from Standard Review Actions, a project-specific wetland compensation plan will be prepared for approval by IDNR. When the necessary compensation is proposed from a wetland compensation account or other approved source of preexisting compensation credits, the compensation plan will provide information in accordance with Section VII A, below. For all other Standard Review Actions, IDNR will be provided a project-specific conceptual plan (see Section VII B) for concurrence and a wetland compensation plan (see Section VII C) for approval. IDOT will expect that the response from IDNR to the conceptual plan will indicate whether compensation sites proposed are acceptable, and whether

IDNR has any other suitable sites available on which the necessary compensation would be feasible.

Unless IDOT and IDNR mutually agree to a longer time period, IDNR will respond to compensation plan submittals within 45 days of receipt. IDOT will accomplish follow-up coordination with IDNR as necessary to respond to comments from IDNR regarding the compensation proposal.

Proposals for use of wetland research funds to provide any part of the required compensation will be developed in consultation and coordination with IDNR and the Interagency Wetland Committee. Review and processing times described above will not be operative when compensation plans propose use of research funding for compensation. In these cases, IDNR will notify IDOT within 30 days of receipt of the compensation plan as to when the Committee will be convened to review the proposal for use of research funds. The review by the Committee should occur at the next regularly-scheduled Committee meeting or within 60 days of receipt of the plan by IDNR, whichever occurs first.

For Standard Review Actions, construction that would adversely affect wetlands will not commence until consultation with IDNR has occurred and IDNR has either approved the wetland compensation plan for unavoidable adverse wetland impacts or agreed that the impacts may be accumulated for after-the-fact compensation.

As provided in 17 Ill. Adm. Code 1090.50 (5), IDNR approval of a compensation plan is valid for three years. For projects involving a conceptual plan and a wetland compensation plan, the three-year time frame will begin upon approval of the wetland compensation plan. If IDOT does not commence implementation of a wetland compensation plan within the three year time frame, IDOT will re-coordinate with IDNR to renew the approval prior to proceeding with implementation of the compensation plan. IDOT will determine whether any changes have occurred at the proposed compensation site which would require revision of the compensation plan and will advise IDNR. If such changes have occurred, the plan will be revised as necessary to respond to those changes.

For Standard Review Actions, status reports will be provided to IDNR on implementation of wetland compensation plans involving wetlands restoration or creation, in accordance with 17 Ill. Adm. Code 1090.50 (6). These reports will include the following:

- A post-construction site evaluation report which will be submitted within 90 days after completion of any construction, seeding, planting, etc. necessary for establishing the replacement wetlands;
- Up to 4 annual reports on the status of the replacement wetlands and any associated buffer; and
- A final report on the status of the replacement wetlands and any associated buffer which will be submitted 5 years after the post-construction evaluation report.

VII. Content of Wetland Compensation Plans

A. Plans for Use of Approved Preexisting Compensation Credits

When all of the necessary wetland compensation for a project is proposed from an approved wetland compensation account or other approved source of preexisting wetland credits, the following information will be provided in the wetland compensation plan:

- Project name/number, location, and description
- Name and address of the office responsible for the project
- Indication of type(s) (per Appendix B), amount(s), and locations of wetlands affected, including the drainage basin(s) and watercourses involved
- Description of alternatives which would avoid or minimize adverse impacts to the wetland and, as applicable, the reasons for their rejection
- Reasons for proposing use of an approved wetland compensation account or other source of preexisting wetland credits
- Description of the applicable compensation ratio(s), the amount and type (per Appendix B) of compensation credit to be provided, and the source of the credits, including location, current balances and any pending changes

B. Conceptual Plan

When all or a part of the necessary compensation will be provided through establishment of wetlands on a project-specific basis, a conceptual plan will be provided to outline the proposed compensation. The conceptual plan will present sufficient preliminary information to enable IDNR to concur in the proposed location and approach to providing compensation prior to proceeding with development of the details necessary for actually implementing the compensation.

The following is an outline of information that a conceptual compensation plan may include. The first two items will be provided in all cases. The remaining items will be addressed as necessary and appropriate to adequately describe the project's involvement with wetlands and the proposed compensation.

- Project name/number, location, and description
- Name and address for the office responsible for implementation of the wetland compensation plan
- Date of and summary statement of wetland surveys and the name, work address, and phone number of person(s) conducting surveys
- Indication of type(s) (per Appendix B) and amount(s) of wetland affected, including drainage basin(s) and watercourse(s) involved
- Description of alternatives considered which would avoid or minimize adverse impacts to the wetland and, as applicable, the reasons for their rejection
- Description of the precise location of the proposed wetland replacement site (including a map, legal description, and an indication of the distance from the wetland impact location(s) for which it provides compensation) and an indication of its current land use, biological, hydrological, and soils characteristics

- Description of the proposed wetlands compensation, including a clear statement of goals, description of compensating wetlands to be created, restored, or acquired (including type(s) per Appendix B, and a conceptual plan drawing showing approximate layout, shape, etc.); compensation ratios to be applied; any research funding proposed in lieu of other compensation; and, if use of preexisting wetlands credits is proposed as a component of the compensation, the source of the credits, including current balances and pending changes
- General description of the work (e.g., grading, planting, importation of topsoil, alteration of hydrology) proposed to establish compensation site(s)
- Indication of the entity(ies) that will assume long-term responsibility for compensation sites to be established

C. Wetland Compensation Plan

A detailed wetlands compensation plan will provide the level of information necessary for implementing proposed compensation. The wetland compensation plan will include the information from the conceptual plan in addition to the items listed in 17 Ill. Adm. Code 1090.50 (c) (3), as necessary and appropriate for the specific compensation proposed.

VIII. Wetland Compensation Accounts

IDOT recognizes the benefits of consolidating compensation for numerous small impacts in larger sites. Such consolidation allows for economies of scale in planning, implementation, and maintenance of compensation and promotes the establishment of wetlands in advance of impacts that offer the potential for providing a broader range of functional benefits. IDOT also acknowledges the advantages such sites offer in terms of their potential for being located and sized to complement the plans and programs of resource agencies to make the sites more desirable for long term management and to provide enhanced environmental and social benefits for the people of Illinois. IDOT will actively pursue the development and use of wetland compensation account sites as practical for IDOT and IDOT pass-through funded projects, to maximize the benefits such sites provide. Establishment of wetland compensation accounts by IDOT or local agencies and project sponsors for use in complying with wetlands compensation requirements under the Act will be accomplished through formal agreement with IDNR. The unit of measurement for debits and credits will be established in the agreement for the compensation account. Use of credits from wetland compensation accounts will be subject to the compensation ratios in 17 Ill. Admin. Code 1090.50.

IX. Authority and Policies for Acquisition of Wetland Compensation Land

IDOT may acquire for highway purposes any property necessary for a highway project, or any other property for which a specific appropriation has been made. Mitigation property on-site or contiguous to a project will be described and discussed in appropriate project planning and design documents to adequately establish the necessity of acquisition. For other mitigation parcels, the need will be documented in wetland compensation account proposals or compensation plans submitted by IDOT and in written approval of such proposals and plans by IDNR.

Lands for IDOT wetland compensation accounts will be acquired through whatever means IDOT determines appropriate, consistent with IDOT's statutory powers and authorities.

Local agencies and sponsors may use available eminent domain authority for compensation land within project rights-of-way and, when specifically allowed by law, for off-site compensation.

X. Monitoring

Monitoring and reporting procedures for wetland compensation areas will be addressed in accordance with the following:

A. For IDOT or local agency wetlands compensation account (bank) sites, monitoring and reporting requirements will be specified in the interagency agreement with IDNR and other appropriate signatories authorizing establishment of the sites.

B. For project-specific wetlands restoration or creation associated with Standard Review Actions or with Programmatic Review Actions that will require coordination with the Corps of Engineers for approval of the wetland compensation plan, monitoring and reporting procedures will be determined in consultation with the IDNR and the Corps of Engineers as a part of the Wetland Compensation Plan.

C. For project-specific wetlands restoration or creation associated with Programmatic Review Actions that do not require coordination with the Corps of Engineers for approval of a wetlands compensation plan, monitoring procedures will be documented in the compensation plan on file for the project and will be based on the guidance in Chapter 5 of the "Illinois Wetland Restoration and Creation Guide" (Illinois Natural History Survey Special Publication 19, March 1997), and Chapter 8 of NCHRP Report 379 "Guidelines for the Development of Wetland Replacement Areas." The monitoring procedures will be commensurate with the size and complexity of the wetlands to be restored/created. For these actions, IDNR will be provided an annual report of the monitoring results for a period of up to 5 years, as necessary to verify wetlands success. This will be in addition to the information provided in the periodic summary reports on Programmatic Review Actions described in Section VI A.

D. Monitoring will be carried out by or under the direction of IDOT except when that responsibility is delegated to a local agency or sponsor, subject to approval by IDNR of the monitoring plan of that local agency or sponsor.

XI. Transfer of Wetlands

Whenever IDOT can transfer management responsibility for wetland compensation areas without jeopardizing project operation, it will submit a written request to IDNR for approval of the transfer. IDOT will ask that IDNR respond to such requests within 60 days. IDOT will identify the proposed recipient of the land and will provide or outline the terms of the transfer agreement. IDOT generally will give preference to qualified entities which can ensure appropriate management without need for funding support from IDOT for assuming the management activities.

In accordance with the requirements of the Act, and subject to obtaining any required approvals from the Governor or the State Legislature, IDOT will transfer compensation wetlands (other than those which are located within or that are otherwise an integral part of project rights-of-way) to IDNR or other eligible sponsors subject to formal transfer agreements that will fulfill all obligations of IDOT related to the approved compensation plan. In the event that IDOT is unable to find any other suitable entity to assume responsibility for long-term management of IDOT-developed wetland compensation sites, IDOT will transfer such sites to IDNR for long-term management. Such transfer shall not require a commitment from IDOT to provide funds to IDNR to support the management activities.

As long as wetland compensation property is held by IDOT, it will be maintained for its designated use. Where wetland compensation sites for IDOT pass-through funded projects are under the jurisdiction of a local agency, IDOT will require the local agency to ensure that the site will be maintained for wetlands purposes. Local agencies or sponsors may transfer wetlands or maintenance responsibilities to other public or private entities when allowed by law, subject to obtaining IDNR approval of such transfer.

If IDOT proposes the sale, exchange, or release of State-owned land containing wetlands to an entity other than another State agency, it will require the recipient of the land to grant a conservation easement which must contain provisions to protect the wetlands and any associated buffer areas from adverse impacts. Such easements will be written and recorded pursuant to the Real Property Conservation Rights Act. IDOT will attempt to have a unit of local government be the grantee of the easement. If a unit of local government cannot be obtained, IDOT will attempt to have an acceptable not-for-profit corporation or charitable trust be the grantee. If a unit of local government or not-for-profit entity cannot be obtained, IDOT will reserve conservation rights in its deed or release document and will transfer those rights to IDNR. Prior to the sale, exchange, or release of State-owned lands under IDOT control to an entity other than another State agency, the department will submit a written request to IDNR in accordance with 17 Ill. Adm. Code 1090.90 c 4.

XII. Compliance with Other Requirements

In implementing the provisions of this Action Plan, IDOT will ensure appropriate compliance with laws and regulations applicable to significant historic and archaeological sites and other resources requiring special consideration.

XIII. Conflict Resolution Procedures

Every effort will be made to cooperate with and coordinate wetland matters with IDNR. If circumstances arise in which a disagreement occurs over any substantive matter contained in this Action Plan or its application to IDOT actions or projects, the first attempt at resolution shall occur with technical managers in both Departments. If the matter cannot be resolved at this level within a reasonable period, it may be referred to higher management levels for resolution. The priority of the issues involved and the urgency of the need for resolution shall determine the time frames for referral to higher levels and how high within each organization the matter ultimately will be referred. If a conflict cannot be satisfactorily resolved between administrators in IDOT

and IDNR, up to and including the Secretary of IDOT and Director of IDNR, the matter may be referred to the Governor's office for resolution.

XIV. Reports on Action Plan Implementation

Following approval of this Action Plan, IDOT will submit to IDNR a biennial report summarizing actions taken to implement the provisions of the Action Plan. The report will provide a listing of projects advanced through the wetlands compliance process and a tabulation of the amounts and types of associated mitigation accomplished. The report also will provide a description of other activities that resulted in the establishment of wetlands and a tabulation of the amount and type(s) of wetlands generated by those activities. The first biennial report will be submitted to IDNR on or before June 30 of the second year following initial approval of the Action Plan. Subsequent reports will be submitted on or before June 30 every other year thereafter.

1221Ajb.doc

Appendix A

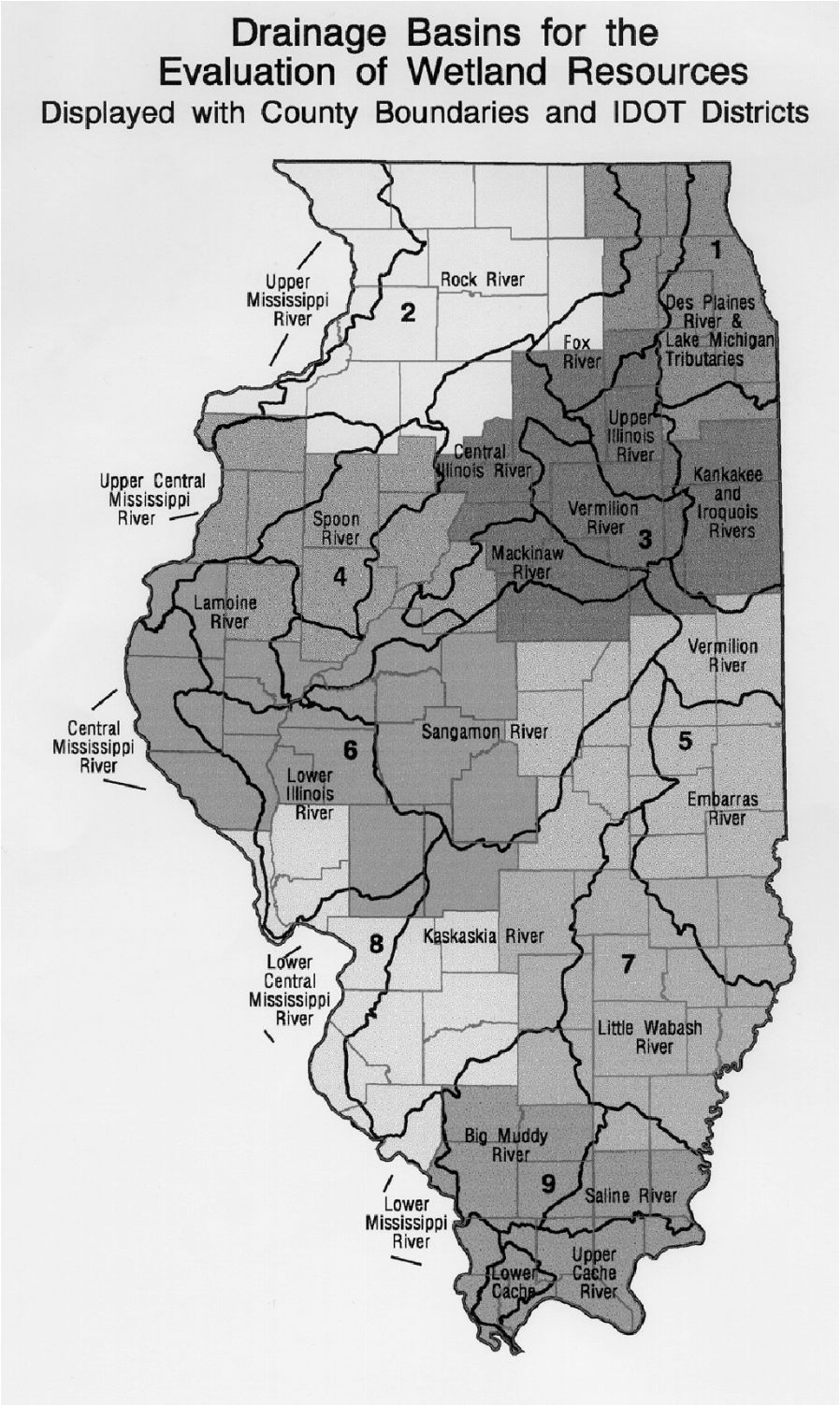
Drainage Basins for the
Evaluation of Wetland Resources
Displayed with County Boundaries and IDOT Districts
1
Des Plaines River & Lake Michigan Tributaries
2
Rock River
Upper Mississippi River
Fox River
Upper Illinois River
Central Illinois River
Kankakee and Iroquois Rivers
Upper Central Mississippi River
Spoon River
Vermilion River
3
Mackinaw River
4
Lamoine River
Vermilion River
Central Mississippi River
Sangamon River
5
6
Lower Illinois River
Embarras River
8
Kaskaskia River
7
Lower Central Mississippi River
Little Wabash River
Big Muddy River
9
Saline River
Lower Mississippi River
Upper Cache River
Lower Cache

Appendix B

Wetlands Categories

Wetlands in Illinois can be classified into 12 categories as indicated below (refer to the accompanying category definitions), all of which are afforded protection under the Interagency Wetland Policy Act of 1989. For purposes of the IDOT wetland action plan, "disturbed" wetlands are treated as a separate category and the remaining categories are placed in three groups indicating their relative quality/complexity/rarity. (The order in which the wetland types are listed within each group does not indicate a relative ranking of the types within the group.) The groups are discussed in the following paragraphs and are intended primarily to guide project decision makers in planning wetlands compensation that will contribute to improving the quality of wetlands in Illinois.

□Group 1

Bog
Fen
Flatwoods

Wetland types represented by the Group 1 categories are the rarest types in Illinois. Because of the unique geological and topographic conditions essential to their existence, the potential for creating replacement wetlands of these types is extremely limited (in the case of fens) or nonexistent (in the case of bogs and flatwoods). The utmost effort shall be made to avoid any adverse impacts to wetlands in these categories.

□Group 2

Sedge Meadow
Prairie, wet
Swamp

Group 2 wetland types are high quality, relatively complex systems. They are somewhat limited in their occurrence in the State because of the special conditions on which their existence depends. Because of their complexity, they will be somewhat difficult to create or establish and will have to meet demanding site criteria in order to be sustainable. For unavoidable impacts to Group 2 wetlands, compensation shall be of the same type as the wetland affected, to the fullest extent possible.

□Group 3

Marsh
Wet meadow
Forested
Scrub-shrub
Open water

Group 3 wetlands are the most prevalent in Illinois. These categories also can be more readily created or established in more areas of the State than can Group 1 or Group 2 wetlands.

□Disturbed wetlands

Disturbed wetlands include sites such as farmed wetlands, successional old fields, and urban disturbed areas which, because of their disturbed nature, do not readily fit any other wetlands category. For Disturbed wetlands, compensation for unavoidable adverse impacts will not be in-kind; it shall be either a Group 3 type or a Group 2 type.

Definitions of Wetland Categories

Bog

The bog communities of Illinois are found almost exclusively in glaciated depressions of the northeast corner of the state. Drainage is usually restricted, and this, coupled with an abundance of sphagnum moss, results in conditions which are highly acidic. The soils of a bog are saturated throughout the growing season in most years, and small open water areas are common. Vegetation consists of a variety of emergents with shrubs and/or small trees occurring on more consolidated peat. (At the beginning of 1994, there were 10 identified bogs in Illinois which comprised 232.8 acres.)
Definition adapted from A Field Guide to the Wetlands of Illinois, 1988)

Fen

A fen is a type of wet meadow fed by an alkaline water source such as a calcareous spring or seep. The deposition of calcium and magnesium in the soil results in an elevated soil pH and gives rise to a variety of unique plants adapted to surviving these conditions. The vegetation is normally comprised of herbaceous emergents although woody shrubs or even trees sometimes occur. (At the beginning of 1994, there were 20 identified fens in Illinois which comprised 153.1 acres.)
Definition adapted from A Field Guide to the Wetlands of Illinois, 1988.

Flatwoods

Flatwoods are woodlands growing on level surfaces, usually with widely spaced trees, with slowly permeable and poorly drained soils that contain an argillic horizon or claypan. (At the beginning of 1994, there were 24 identified flatwoods in Illinois which comprised 617.5 acres.)

Definition adapted from White, John, 1978. Illinois Natural Areas Inventory Technical Report, Volume 1 Survey Methods and Results.

Sedge Meadow

A sedge meadow is a wetland dominated by sedges (*Carex*) and occurring on peat, muck, or wet sand.
Definition adapted from White, John, 1978. Illinois Natural Areas Inventory Technical Report, Volume 1 Survey Methods and Results.

Prairie, wet

A wet prairie is a community dominated by graminoid vegetation on mineral soil which is almost always saturated.
Definition adapted from White, John, 1978. Illinois Natural Areas Inventory Technical Report, Volume 1 Survey Methods and Results.

Swamp

A swamp is a wetland characterized by the presence of permanent to semipermanent water and a greater than 30% areal canopy cover of tall (over 20 feet) woody vegetation. In many areas, the canopy cover exceeds 80%.
Definition adapted from A Field Guide to the Wetlands of Illinois, 1988.

Marsh

A marsh is a wetland in which tall graminoid plants dominate the plant communities. Marshes have water near or above the surface for most of the year. Soils may be peat, muck, or mineral.
Definition adapted from White, John, 1978. Illinois Natural Areas Inventory Technical Report, Volume 1 Survey Methods and Results.

Wet meadow

A wet meadow is a wetland characterized by moist to saturated soils with standing water present for only brief to moderate periods during the growing season. Vegetation includes a wide variety of herbaceous species, from sedges and rushes to forbs and grasses. Woody vegetation, if present, accounts for less than 30% of the total areal cover.
Definition adapted from A Field Guide to the Wetlands of Illinois, 1988.

Forested

Forested wetlands differ from true swamps in that they lack continuously standing water, although repeated flooding is

common. Differences in the length of inundation give rise to a variety of community types within this classification. Definition adapted from A Field Guide to the Wetlands of Illinois, 1988.

Scrub-shrub

A scrub-shrub wetland typifies a community in transition and exemplifies the dynamic nature of wetlands in general. Many emergent wetlands left undisturbed, will gradually be replaced through succession by woody vegetation that will in time develop into a mature forest. The scrub-shrub wetland is often found grading shoreward from an emergent wetland which borders a lake, stream, or pond. The woody vegetation accounts for at least 30% of the vegetation present, and must be less than 20 feet (6 meters) tall. Species composition is dependent on the length of inundation, with willows and dogwood growing in the temporarily to seasonally wet areas and buttonbush in semipermanently flooded areas.
Definition adapted from A Field Guide to the Wetlands of Illinois, 1988.

Open water wetlands

Small and shallow [area < 20 acres (8.1 ha) and depth < 6.6 ft. (2 m)] open water areas that lack emergent woody or graminoid vegetation. Natural ponds, farm ponds, borrow pits, and open water areas that occur within a marsh or swamp are included in this category. (Lacustrine and riverine systems are not included in this category.)

Illinois Department of Transportation
2300 South Dirksen Parkway / Springfield, Illinois / 62764

BDE PROCEDURE MEMORANDUM

NUMBER: 34-04

SUBJECT: Impact Attenuators (Crash Cushions)

DATE: February 6, 2004

The information herein replaces Section 38-8 in the BDE Manual. This memorandum supersedes BDE Procedure Memorandum 34-03, effective for projects on the April 2004 and subsequent lettings.

Background

Previous IDOT applications of impact attenuators (crash cushions) were designed to various performance standards. Current FHWA policy requires that all roadside safety hardware used on National Highway System (NHS) Routes be accepted under National Cooperative Highway Research Program Report 350 (NCHRP 350) criteria. This memorandum updates Section 38-8 of the BDE Manual to list and give guidance on application of impact attenuator hardware that is accepted by the FHWA under NCHRP 350.

Applicability

The following procedures are applicable to all projects on the State highway system, effective April 1, 2004. (Also, any items used on a case-by-case basis shall comply with the appropriate NCHRP 350 criteria.)

Generally, the devices listed herein are accepted at Test Level 3 under the NCHRP 350 criteria. When the design speed is 45 mph (70 km/hr) or less (including work zones with reduced speed limits), the designer may consider specifications for devices accepted at Test Level 2. Contact the BDE for further information.

Procedures

General

Impact attenuators (crash cushions) are protective systems that prevent errant vehicles from impacting hazards by decelerating them to a stop after a frontal impact, by redirecting them away from the hazard, or by decelerating them after a side impact. They operate on the basis of either energy absorption or momentum transfer. Impact attenuators are adaptable to many roadside hazard locations where longitudinal barriers cannot practically be used.

Warrants

Impact attenuator warrants are the same as barrier warrants. Once a hazard is identified, the designer should first attempt to remove, relocate, or make the hazard breakaway. If the foregoing is impractical, then an impact attenuator should be considered.

Impact attenuators serve two principal functions. They may be installed as stand-alone devices to shield point hazards such as sign foundations, or they may be used as terminal treatments for roadside or median barrier systems. When used to shield a point hazard, the impact attenuator is placed very near or in contact with the hazard, thus no length of need applies, and no additional barrier is required. This can only be done where the shoulder and/or foreslope in the runout area is 10:1 or flatter, and other aspects of the required impact attenuator layout (pad or base, physical room for the system, etc.) can be accommodated. Otherwise, a roadside barrier or median barrier, as appropriate should be used. An impact attenuator, or other NCHRP 350 approved terminal treatment will then be needed for the barrier.

Impact Attenuator Types

Overview

Selection of the most appropriate impact attenuator type depends on a variety of factors.

The impact attenuator devices have various properties related to the path of a vehicle after impact. These are called the *redirective properties*.

Also, the various systems have varied means to deal with the energy or momentum imparted by an impact. These are called the *operational principles.*

Some systems retain residual capacity to absorb additional frontal impacts during the time between an initial crash and full repair of the system. Systems vary in the cost and effort required for repair of crash and nuisance hits. These are considered as *maintenance and repair issues*.

To be considered for use on Illinois highways, a given device must be on the Department's approved list. This issue is addressed under *device approval status*.

The size, layout, and anchorage requirements may dictate or eliminate various systems depending on the type of location where protection is required. These requirements are grouped together for consideration as *physical placement requirements.*

Finally, given the wide variation in the approaches to the above considerations, the systems vary in *cost* of installation and repair. Life cycle cost analysis using the Roadside Safety Analysis Program (RSAP) may also be a useful tool.

All of these factors, taken together will guide the *impact attenuator selection*.

Redirective Properties

A vehicle is redirected when it safely stays on the same side of the item it strikes. NCHRP 350 provides further criteria to define safe redirection.

1. Fully Redirective Devices

   A fully redirective device will safely redirect a vehicle that impacts at any location along the face of the device.

2. Partially Redirective Devices

   A partially redirective device will safely redirect a vehicle that impacts downstream of a given length of need point along the length of the device. This type of device will allow a vehicle impacting between the length of need point and the free end of the impact attenuator to pass through to the area behind the device.

3. Non-Redirective Devices

   A non-redirective device will either capture an impacting vehicle or allow it to pass through when hit along the face of the device.

Operational Principles

1. Energy Absorbing Devices

   This type of impact attenuator operates on the principle of absorbing the energy of the vehicle through the use of bays or modules filled with or consisting of crushable or deformable materials. Some energy is also absorbed by the impacting vehicle as the front end of the vehicle is crushed on impact. Energy absorbing attenuators require rigid back-up support or connection to another barrier system to contain the forces created by the deformation of the device. This support may be supplied as part of the impact attenuator, or may be derived from its connection to the barrier or hazard (such as a concrete structure). This distinction may preclude the use of some system for shielding point hazards which will not provide this support. In such cases, a Special Provision limiting the selection to no less than two alternatives may be required. This type of device also requires vertical and lateral anchoring. This is accomplished by attachment to a bituminous or concrete base, or by placement of posts. Devices of this type capture or rebound the vehicle in a frontal impact. For side impacts, the devices work either as fully redirective or partially redirective.

2. Momentum Transfer Devices

   This type of system operates by transferring the momentum of an impacting vehicle to an expendable mass of material contained in the

device. A typical device of this type is an array of sand-filled plastic modules. Sand module configurations meeting NCHRP 350 requirements are available to accommodate various speeds and widths. However, arrays with only one row of barrels are not approved for use by IDOT. Information is available from the various manufacturers regarding their NCHRP 350 accepted configurations.

The sand module systems require no back-up support or connection to another system. However, they do require that the modules be placed on a bituminous or concrete base. Sand modules have no redirective capability and generate considerable debris upon impact. On a corner with approaching traffic, the exterior modules must be laterally offset at least 2.5 ft (750 mm) from the corner of the hazard (Figure 1.)

The sand module impact attenuator design should allow for safe side impacts. Figures 1 and 2 illustrate two methods to modify the sand module design to accommodate angle impacts. Figure 1 illustrates how the modules may be shifted to afford attenuation at the end points and direction along the sides of the hazard by closing or covering the gap between pier columns. Figure 2 illustrates where the side of the hazard and available space are such that full protection, through attenuation only, can be provided by the use of additional modules to widen the standard array. Although the entire area of the hazard must be shielded from angle impacts either by attenuation or redirection, the permissible attenuation may be varied to optimize space and economy. The layout of the sand module arrays should be as accepted under NCHRP 350, or designed to meet those criteria.

The specific layout of sand modules, including positioning relative to the hazard shall be included in the plans. It shall note the Test Level for which the array is designed.

Another type of system listed in this category is the water filled impact attenuator.[1] Water filled impact attenuators also have no redirective capability and may spread water in the area of an impact. They require attachment to the end of a concrete barrier, but do not require other anchorage. Water filled impact attenuators require less width for placement than do sand module impact attenuators.

Figure 3 gives comparisons of systems based on their operational principles.

[1] The water-filled barrier dissipates energy both by energy transfer (crushing of modules) and by momentum transfer to the system's mass.

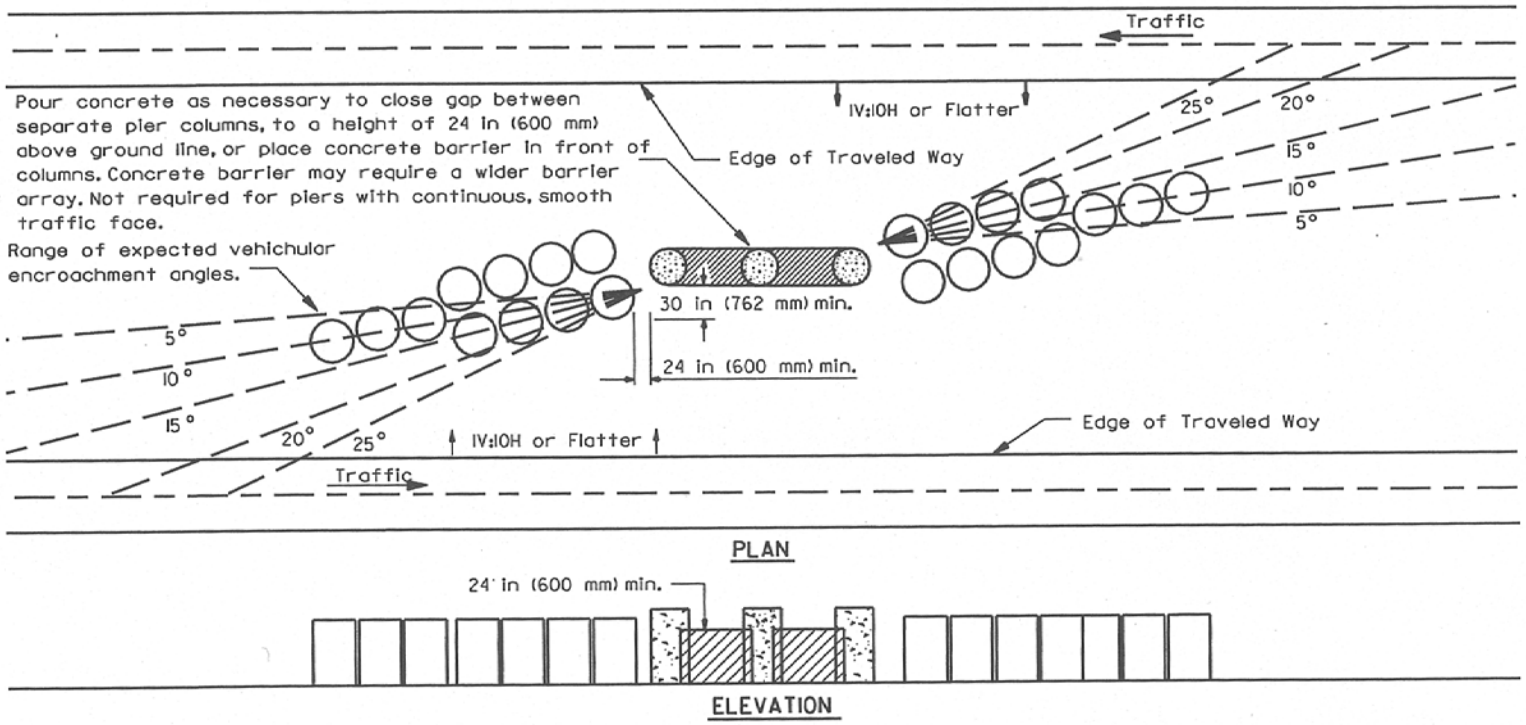

TYPICAL INSTALLATION OF A FREESTANDING, SAND-FILLED, CONTAINER-TYPE IMPACT ATTENUATOR IN MEDIAN

ANGLE IMPACT & POSITIONING DESIGN FOR SAND BARRELS

Figure 1

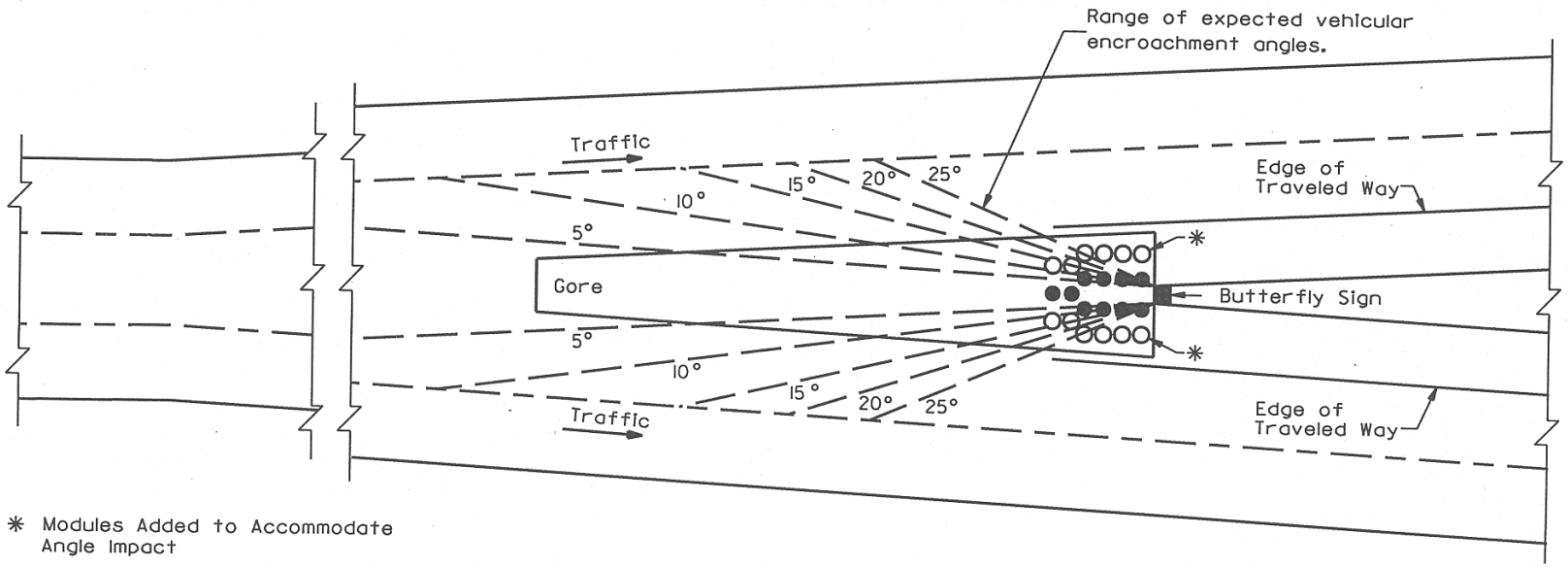

TYPICAL INSTALLATION OF A FREESTANDING, SAND-FILLED, CONTAINER-TYPE IMPACT ATTENUATOR SYSTEM IN A MAJOR FORK

ANGLE IMPACT DESIGN FOR SAND BARRELS

Figure 2

Comparison by Operational Principle

OPERATIONAL PRINCIPLE	ADVANTAGES	DISADVANTAGES
Energy Absorbing Devices	1. Little or no debris after a hit. 2. Ease of maintenance after a hit. 3. Some systems retain partial attenuation capacity after a hit. 4. Relatively low maintenance cost to repair after a hit. 5. Protection from pocketing at transition from impact attenuator to hazard. 6. Adaptable to very narrow hazards.	1. Possible high initial costs. 2. Considerable site preparation. (Pad, back-up structure, mounting bolts or anchors.) 3. IDOT pay items and specifications will cover hazards up to only 90 inches wide. See discussion in "Physical Placement Requirements", under "Transitions."
Momuntum Transfer Devices (Sand Modules)	1. Relatively low initial cost. 2. Ease of installation. 3. Versatile; can be used to cover a large area.	1. Considerable debris after a unit is hit. 2. Relatively high maintenance cost to repair after a hit. 3. Generally, no residual attenuation capacity after a major hit. 4. No side redirection and little or no protection at transition from impact attenuator to hazard. 5. Considerable inventory of parts and space for replacements required. 6. Modules may "walk" when placed on structures. (Contact BDE if this application is required.)
Momentum Transfer Devices (Water Filled)	1. Relatively low initial cost. 2. Ease of installation 3. Little or no site preparation 4. Does not require anchorage to a paved base. 5. Adaptable to very narrow hazards. 6. After impact, can be restored quickly by two laborers and a water supply/tank.	1. Water on ground or pavement immediately after a hit. 2. Requires environmentally friendly antifreeze for cold weather application. 3. Attaches only to concrete barrier, although the barrier may transition then to other systems. 4. Generally, no residual attenuation capacity after a major hit. 5. No side redirection. 6. Modules may "walk" when placed on cross-sloped structures. (Contact BDE if this application is required)

Figure 3

Maintenance and Repair Considerations

Some systems require extensive repairs or replacement after a full speed impact, while some others may only require minor adjustments and/or replacement of drop-in modules. Additionally, some systems retain partial capability to shield a hazard after an initial impact and before repair.

Sand modules are particularly vulnerable to nuisance hits from mowers or wide vehicles. Such occurrences may puncture the plastic modules and cause loss of sand, thus rendering the devices ineffective. Care should be taken to provide some buffer space on the pad for sand modules to allow for mower overhang. A minimum suggested buffer is 12 inches (300 mm) along the sides and front of the array.

In the following sections, the term "Severe Use" is used to indicate installations for which the crash cushion should require minimum cost and time for repairs after an impact, and should also retain some residual capacity to absorb additional frontal impacts while awaiting repairs. These installations are those where repeated or frequent hits are known or anticipated, and where lane closures to repair the crash cushion need to be kept to a minimum time window.

The residual frontal impact capacity available in the "Severe Use" items may be offset by some reduction in redirective capability. The residual capacity is not a substitute for proper inspection and repair after each impact. Also, the elastic components will deteriorate with time and repeated impacts, and will require replacement. Some current indications are that about 13 to 15 impacts may warrant replacement.

Device Approval Status

1. Approved Devices

   For routine use by IDOT, a system must be accepted under NCHRP 350, and be on the Department's approved list. IDOT's approved list is published as a Special Notice in each "Notice of Letting" document published by IDOT. The designer should note that all of the operational systems are proprietary. Contact BDE for additional information on impact attenuator installations. Also, information regarding NCHRP 350 acceptance, crash test results, and descriptive information may be researched through manufacturers' information, and at the FHWA Internet web page at:

   http://safety.fhwa.dot.gov/fourthlevel/hardware/term_cush.htm

   Unless otherwise noted, all items on the Department's approved list of NCHRP 350 devices are crash tested and accepted at Test Level 3. This level of safety is adequate for facilities with speed limits posted greater than 45 mph. For lower speed facilities, the designer may specify the use of devices accepted at Test Level 2. Information relative to Test Level 2 devices is included in Attachment A and in the BDE Special Provisions.

Also, see Attachment A for a partial review and comparison of attributes of various approved systems.

2. Other Devices

   There are some devices accepted under NCHRP 350 but not listed on the Department's approved list. See the above listed Internet site, the Roadside Design Guide, and the various manufacturers brochures and Internet sites. A proposed use of these devices must be coordinated with BDE.

   Attachment B correlates the various systems to contract pay items.

Physical Placement Requirements

Several factors should be considered in the placement of an impact attenuator:

1. Level Terrain. All impact attenuators have been designed and tested for level conditions. Vehicular impacts on devices placed on an excessively sloped site could result in an impact at improper height that could produce undesirable vehicular behavior. Therefore, the attenuator should be placed on a base or pavement slightly sloped or crowned to facilitate drainage, but the cross slope should not exceed 5%, or as allowed by the proprietary specifications.

2. Curbs. No curbs higher than 2 in (50 mm) should be constructed at impact attenuator installations. On existing highways, all curbs higher than 2 in (50 mm) should be removed at proposed installations, if feasible.

3. Surface. Many impact attenuator systems require a paved, bituminous or concrete pad. To minimize nuisance hits, especially for sand module impact attenuators, the total base width should be 2 ft (600 mm) wider than the array.

4. Elevated Structures. The unanchored sand modules or water filled impact attenuators may "walk" due to the vibration of an elevated structure with a cross-sloped surface. This could adversely affect performance. If it is necessary to place sand modules or water filled impact attenuators on elevated structures, contact BDE for assistance.

5. Orientation. The impact attenuator should be oriented to accommodate the probable impact angle of an encroaching vehicle. See Figures 1 and 2 for sand modules. This will maximize the likelihood of a head-on impact. However, this is not as important for impact attenuators with redirective capability. The proper orientation angle will depend upon the design speed, roadway alignment, and lateral offset distance to the attenuator. A maximum angle of approximately 10°, as measured between the highway and impact attenuator longitudinal centerlines, is considered appropriate.

6. Location. The system must not infringe on the traveled way. There should be a minimum of 2 ft (600 mm) behind sand module systems and in front of the hazard to allow access to the system. The space or transition behind other impact attenuator systems should be according to the manufacturer's specifications.

7. Bridge Joints. Avoid the placement of fully or partially redirective impact attenuators over bridge expansion joints or deflection joints in deep superstructures because movement in these joints could create destructive strains on the system's anchor cables or other continuous parts.

8. Transitions. Transitions between systems and backwalls, bridge rails, or other objects are detailed in various proprietary systems, if required. Review the acceptance information and the attached guidance to make sure that systems are approved for bidirectional applications where necessary.

   Many impact attenuators can connect to guardrail or to concrete barrier. In these cases, and when the available length allows, width transitions may be designed using a barrier extended back from the impact attenuator to a connection to or protective position in front of the wide hazard. The barrier design and flare rates should be according to Chapter 38 of the BDE Manual and IDOT Standards. Keep in mind that any flared barrier or impact attenuator may somewhat increase the redirection angle for impacting vehicles.

Cost

The designer should investigate relative costs for items under consideration. The tabulations herein provide some idea of relative costs. In some cases, a premium for fully redirective properties or for items for severe service installations will be offset by the maintenance or repair benefits provided. However, the designer should be careful not to apply premium systems where there is a small chance of a crash happening. Thus, the tabulations recommend the simpler, lower priced systems for installation in wide medians, for example.

Impact Attenuator Selection

The selected impact attenuator must be compatible with the specific site characteristics. For each category of device, more than one approved system must be allowed for competitive bidding, unless specific approval is made according to 66-1.04(b) of the BDE Manual. Selection of the correct category (pay item) will require comparison and analysis of possible solutions. Factors to consider include:

- type and width of hazard (see above discussion on transitions);

- space, or reserve area, available for installation of the system. The reserve area allows for placement of the barrier and any necessary clearances. (See Figure 4.)

- whether the hazard to be shielded is located in a high- or low-risk impact area;

- initial, maintenance, and restoration costs; and

- ease or difficulty of restoration of the system after impact. The importance of this factor will be related to the traffic and hazard levels at a site. More traffic and higher hazards will make speedy repair or replacement a higher priority.

Figure 5 summarizes the advantages and disadvantages of the impact attenuator principles and categories provided in IDOT specifications. There are many other factors which will influence the selection of a category for a given site. Therefore, the designer should only use this figure as a starting point in the comparison and analysis process for selection of the best category.

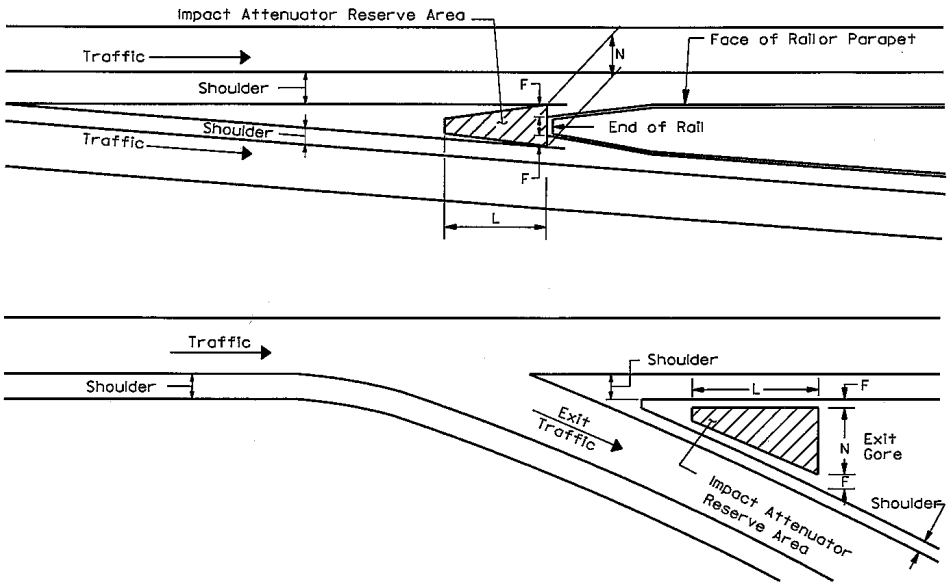

Design Speed On Mainline (mph)	Dimensions for Impact Attenuator Reserve Area (feet)								
	Minimum						Prefered		
	Restricted Conditions			Unrestricted Conditions					
	N	L	F	N	L	F	N	L	F
45 or less	7	25	2	9	27	3	12	35	4
over 45	7	38	2	9	40	3	12	45	4

Design Speed On Mainline (km/h)	Dimensions for Impact Attenuator Reserve Area (meters)								
	Minimum						Prefered		
	Restricted Conditions			Unrestricted Conditions					
	N	L	F	N	L	F	N	L	F
70 or less	2.1	7.6	0.6	2.8	8.2	0.9	3.7	10.7	1.2
over 70	2.1	11.6	0.6	2.8	12.2	0.9	3.7	13.7	1.2

RESERVE AREA FOR IMPACT ATTENUATORS

Figure 4

Comparison by Pay Item

OPERATIONAL PRINCIPLE/(PAY ITEM)	ADVANTAGES	DISADVANTAGES	TYPICAL USES*
ENERGY ABSORBING	*See Figure 3.*	*See Figure 3*	
Impact Attenuators (Fully Redirective, Narrow) and Impact Attenuators, Temporary (Fully Redirective, Narrow)	1. Prevents encroaching vehicle from traveling behind the impact attenuator. 2. Space efficient. 3. Can fit narrow hazards. 4. Where space permits, connection to a barrier system may allow shielding of wider hazards.	1. Residual capacity after an impact varies among items in this category. 2. Requires anchoring to a slab or pavement. 3. Not suited to wide hazards.	1. Ends of concrete barrier separating opposing traffic. 2. Narrow medians, piers. 3. Type D guardrail
Impact Attenuators (Fully Redirective, Wide), and Impact Attenuators, Temporary (Fully Redirective, Wide)	1. Prevents encroaching vehicle from traveling behind the impact attenuator. 2. IDOT pay items and specifications will cover hazards up to only 90 inches wide. See discussion in "Physical Placement Requirements", under "Transitions." 3. Space efficient.	1. Residual capacity after an impact varies among items in this category. 2. Requires anchoring to a slab or pavement.	1. Piers, gores, and similar areas separating opposing traffic. 2. Narrow medians.
Impact Attenuators (Severe Use, Narrow) and Impact Attenuators, Temporary (Severe Use, Narrow)	1. Prevents encroaching vehicle from traveling behind the impact attenuator. 2. May retain significant useful impact capacity after some hits. 3. Space efficient. 4. Can fit narrow hazard.	1. Higher cost than items not requiring severe use characteristics. 2. Requires anchoring to a slab or pavement. 3. Not suited to wide hazards. 4. May rebound a vehicle as the system restores after a frontal hit. This may create secondary collisions with traffic. 5. Requires post impact monitoring to assure that reusable modules are replaced at the end of their service life.	1. Ends of concrete barrier separating opposing traffic where repeated or frequent hits are expected, and/or where it is necessary to keep repair visits and times to a minimum. 2. Narrow Medians 3. Type D guardrail. 4. Roadside concrete barrier or bridge parapet in a temporary application. 5. Other narrow point hazards. The may require limiting the list of devices to those that are free-standing with respect to the hazard.

*See Attachment B for additional information.

Figure 5

Comparison by Pay Item

(CONTINUED)			
OPERATIONAL PRINCIPLE/(PAY ITEM)	**ADVANTAGES**	**DISADVANTAGES**	**TYPICAL USES***
ENERGY TRANSFER	*See Figure 3*	*See Figure 3*	
Impact Attenuators (Severe Use, Wide) and Impact Attenuators, Temporary (Severe Use, Wide)	1. May retain significant useful frontal impact capacity after some hits. 2. Space efficient. 3. Can cover a hazard width up to about 90 inches.	1. Higher cost than items not requiring severe use characteristics. 2. Requires anchoring to a slab or pavement. 3. May rebound a vehicle as the system restores after a frontal hit. This may create secondary collisions with traffic.	1. Piers or gore areas separating opposing traffic where repeated or frequent hits are expected, and/or where it is necessary to keep repair visits and times to a minimum. 2. Narrow medians.
Impact Attenuators (Partially Redirective)	1. Lower cost than fully redirective systems. 2. Suited for direct attachment to Type D guardrail.	1. For narrow hazards. 2. Requires posts to be driven. 3. Lack of reserve impact capacity after a hit.	1. Ends of Type D guardrail separating traffic lanes moving in the same direction, and where impacts are expected to be infrequent. 2. Wide medians, gore areas. 3. Concrete barrier on right side shoulders, or at gores.
Impact Attenuators (Non Redirective)	See Figure 3 for Sand Modules.	See Figure 3 for Sand Modules	Point hazards such as piers or sign foundations not near a traffic lane.
MOMENTUM TRANSFER	See Figure 3	See Figure 3	
Impact Attenuators Temporary (Non Redirective)	1. See Figure 5.	1. Area for application must have enough room to accommodate either the sand modules, or the water filled impact attenuator (ABSORB 350). 2. Applies principally where it will shield end of a temporary concrete barrier.	1. Ends of concrete barriers, or other hazards well off the traffic lane, and where it is acceptable to allow a vehicle to encroach behind the device. 2. Standard 701321, Standard 701402.

Figure 5 (Continued)

*See Attachment B for additional information.

Temporary Installations

Access to the work site becomes an additional consideration for temporary installations, especially where temporary concrete barriers are used to close a lane or to channel traffic.

Also, in some cases, such as stage construction of two-lane bridges it may be desirable for the impact attenuator to block the closed lane, reducing the likelihood that an errant vehicle could reach the construction area. These competing needs, access and physical closure of the lane, may be mutually exclusive at some sites where shoulders and right of way are restrictive.

Where construction access can be provided on the shoulders or by other available means (temporary widening, easement, etc), the preferred layout would include concrete barriers and an impact attenuator placed to effectively block the closed lane. The designer should provide necessary plan details to show the positioning of the concrete barrier and impact attenuator devices(s). If sand module impact attenuators are allowed, the specific, required array should be included in the plans along with a notation of the Test Level met by the design. Width restrictions may not allow for angling the array toward traffic. In this case, the array should be installed parallel to the roadway.

Where shoulders of sufficient width or other means of access are not available, the designer can arrange the concrete barriers according to the minimums shown on the Standards, and choose among the various pay items for temporary impact attenuators, as appropriate for the site and traffic. This will allow the Contractor a range of options to weigh for access, cost and maintenance factors.

Engineer of Design and Environment Michael L. Hine

Attachments

BDE MEMO 34-04
ATTRIBUTES OF IMPACT ATTENUATORS
ATTACHMENT A

System	Non-Redirective	Partially Redirective	Fully Redirective	Self Restoring	Narrow Only	Connects To:	Bidirectional? (Y/N)	Length ** (Test Level 3)	Length** (Test Level 2)	Min Width (Out to Out)*	Max Width*	Notes
Quadguard			X		Up to 90"	Generic	Y	23'-11"	12'-9"	2'-7"	90"	Requires paved pad.
Quadguard Elite			X	X	Up to 90"	Generic	Y	35'-6"	23'-11"	2'-7"	90"	Requires paved pad.
Quadguard LMC			X	X	Up to 90"	Generic	Y	35'-6"	23'-11"	3'-7"	90"	Requires paved pad.
CAT-350		X			X	Guardrail or Concrete Barrier	Y	31'-3"	N/A	2'-7"	2'-7"	Installs with driven posts.
REACT 350			X	X	Up to 120"	Generic	Y	31'-1"	22'-1"	3'-8" base, & 3' cylinders	120"	Requires paved pad
Brakemaster 350		X			X	Guardrail or Concrete Barrier	Y	31'-6"	N/A	2'-1"	2'-1"	Installs with driven posts.
TAU-II			X		Up to 96"	Generic	Y	26'-11"	15'-5"	2'-11"	8'-8"	Requires paved pad.
FLEAT MT		X			X	Guardrail or Concrete Barrier	Yes -but intended for wide median	37'-6"	25'	Match Type D Guardrail	Match Type D	Installs with driven posts.
TRACC			X		X	Generic	Y	21'	14'	2'-7"	4'-10"(See Note	Requires paved pad.
SAND MODULES	X					Generic		Varies	Varies	6'	Unlimited	Requires paved pad.
ABSORB 350	X				X	Temporary Concrete Barrier	Y	26'-9"	19'-1/4"	2'-0"	2'-0"	Does not require paved surface.
SCI 100GM			X		X	Generic	Y	21'-6"		3'-1 7/16"	3'-1 7/16"	Requires paved pad.

Note: The TRACC may be widened. At it's nominal length and at Test Level 3, the maximum width is 58". Additional width may be gained in approximately 6-1/2" increments by the addition of 2'-4" extension wings..

* The minimum widths shown are nominal out-to-out of the impact attenuator. The various backup systems, transition pieces, etc are considered part of the impact attenuator, . and are to be considered part of the pay item.
Maximum widths are out-to-out if same as minimum, or maximum width of hazard to be shielded, if greater than the shown minimum. This applies to the impact attenuator only. Additional width may be gained by attaching to approved barriers and applying approved flare rates to wide hazards. This application will be limited by available longitudinal space.

** Exclusive of any special transitions or connections.

BDE Memo 34-04
Impact Attenuators -- Permanent Installations
Attachment B

Systems and Allowable Products to Fit Needs	Typical Applications
IMPACT ATTENUATORS (FULLY REDIRECTIVE, NARROW) Quadguard Quadguard Elite Quadguard LMC REACT 350 TAU-II family TRACC family SCI 100GM	*Narrow Median (< 40') Narrow Hazard, Concrete Barrier, Narrow Pier End of Median Barrier or Type D Rail Alignment or traffic operations do not contribute to added likelihood of run off the road incidents.
IMPACT ATTENUATORS (FULLY REDIRECTIVE, WIDE) Quadguard Quadguard Elite Quadguard LMC React 350 TRACC family TAU-II Universal	*Narrow Median (< 40') Up to 90" Wide Hazard, Sign base, pier, etc. Narrow gap between bridges Alignment or traffic operations do not contribute to added likelihood of run off the road incidents. Hazards where space does not allow development of width transitions from other impact attenuators.
IMPACT ATTENUATORS (SEVERE USE, NARROW) Quadguard Elite REACT 350 Quadguard LMC	*Narrow Median(<40'), Expect Repeated Impacts (>2/yr.) Narrow Hazard, Concrete Barrier, Narrow Pier End of Median Barrier or Type D Rail Outside of curves, areas near weaving, lane drops Near entrances, exits on freeways/expressways. Also appropriate on outside shoulder hazards where repeated impacts and traffic levels make continued capability and ease of repairs critical.
IMPACT ATTENUATORS (SEVERE USE, WIDE) Quadguard Elite REACT 350	*Narrow Median(<40'), Expect Repeated Impacts Up to 90" Wide Hazard, Sign base, pier, etc. Narrow Gap Between Bridges Outside of curves, areas near weaving, lane drops Near entrances, exits on freeways/expressways. Also appropriate on outside shoulder hazards where repeated impacts and traffic levels make continued capability and ease of repairs critical. Hazards where space does not allow development of width transitions from other impact attenuators.
IMPACT ATTENUATORS (PARTIALLY REDIRECTIVE) *CAT 350 *Brakemaster 350 *FLEAT MT	Outside Shoulder, Gore Area Narrow Hazard, Pier, Barrier Wall, D Rail Separation of lanes moving in same direction. Expected low frequency of hits.
IMPACT ATTENUATORS (NON-REDIRECTIVE) Fitch Universal Module System Energite III Big Sandy Sand Barrels	Outside Shoulder, Gore Area, Wide Median Sign Support, etc. Separation of lanes moving in same direction, or where there is a wide separation.

Note: The TRACC may be widened. At its nominal length, the maximum width is 58". Additional width may be gained in approximately 6-1/2" increments by the addition of 2'-4" extension wings.

*See figure 6.1 of the 2002 AASHTO Roadside Design Guide. Median Barriers become warranted somewhere between 30' and 50' depending on traffic. This is a reasonable estimate of when we want to avoid having errant vehicles gate through also.

Use of standard barrier sections and approved flare rates may allow installation of narrow impact attenuators in advance of wide hazards, depending on space available.

BDE Memo 34-04
Impact Attenuator Categories -- Temporary Installations
Attachment B
(Continued)

Impact Attenuators (Temporary Installations)

IMPACT ATTENUATORS, TEMPORARY (FULLY REDIRECTIVE, NARROW)
- Quadguard CZ
- Quadguard LMC
- Quadguard Elite
- REACT 350
- TRACC Family
- TAU-II Family
- SCI 100GM

*Narrow median locations.
Temporary locations where errant vehicles must not encroach behind the device. Head to head traffic. Severe hazards beyond the device.

IMPACT ATTENUATORS, TEMPORARY (FULLY REDIRECTIVE, WIDE)
- Quadguard Elite
- Quadguard LMC
- REACT 350
- TRACC Family
- TAU-II Universal

IMPACT ATTENUATORS, TEMPORARY (NON REDIRECTIVE)
- Fitch Universal Module System
- Energite III
- Big Sandy Sand Barrels
- ABSORB 350

Temporary locations where errant vehicle may continue behind the crash cushion. Standard 701321, Standard 701402 as site conditions permit.

IMPACT ATTENUATORS, TEMPORARY (SEVERE USE, NARROW)
- Quadguard LMC
- Quadguard Elite
- REACT 350

*Narrow median locations.
Temporary locations where frequent impacts are expected and/or where access for repairs would create unacceptable traffic control or operational problems. These systems are fully redirective. This must be acceptable at the site.

IMPACT ATTENUATORS, TEMPORARY (SEVERE USE, WIDE)
- Quadguard Elite
- REACT 350

*See figure 6.1 of the 2002 AASHTO Roadside Design Guide. Median Barriers become warranted somewhere between 30' and 50' depending on traffic. That probably is a reasonable estimate of when we want to avoid having errant vehicles gate through also.

Illinois Department of Transportation
2300 South Dirksen Parkway / Springfield, Illinois / 62764

BDE PROCEDURE MEMORANDUM

NUMBER: 35-03

SUBJECT: Detectable Warnings for Curb Ramps, and Other Locations

DATE: August 1, 2003

This memorandum supersedes the second paragraph of Section 58-1.09 (c) of the BDE Manual.

Background

Detectable warnings were required in 1991 by the Americans with Disabilities Act Accessible Guideline (ADAAG) (regulatory standards) for hazardous vehicular ways, transit platform edges and curb ramps. A suspension was placed on requiring detectable warnings at curb ramps and hazardous vehicular ways, but not for transit platform edges. The reason for the suspension was due to concerns raised about specifications, the availability of complying products, maintenance, usefulness, safety and the need for further study. The suspension expired July 26, 2001. The research determined that other designs used in place of truncated domes such as grooves, striations and exposed aggregate, were not detectable in the sidewalk and roadway environment because of the similarities to other surface textures and defects. Truncated domes have a unique design that can be detected underfoot and with a cane, and other surfaces are not considered ADA equivalent and therefore do not comply with the ADA requirements.

The Department of Justice had the option of allowing the suspension to expire on July 26, 2001 or publish a Federal Register Notice to continue the suspension. They decided to let the suspension expire. Consequently, since July 26, 2001 detectable warnings are again required. Subsequently, the Illinois Division of FHWA sent a memorandum dated November 5, 2002 informing the department of the requirements. Various systems are available for use. Many states are uncertain about best practices and as no minimum design standards for the state or local government have been established, the FHWA division office granted the department a grace period to develop specifications and standards.

Applicability

The following procedures are applicable to all curb ramps or other specified locations constructed or improved on the State highway system, and to any curb ramps under local jurisdiction and constructed or improved as part of any State highway project effective January 1, 2004.

Procedures

Responsibility for Construction of Curb Ramps

Under Section 58-1.09(b) of the BDE Manual, placement of detectable warnings alone will not be cause to remove and replace curb ramps.

Detectable Warnings

Detectable warnings shall be installed at locations as detailed in the Highway Standards. Generally, a 24-inch wide strip of detectable warning with contrasting color is required at such locations. The department has selected Federal Standard color 30166, brick red, as its standard. If a local or outside agency wishes to use a different color, BDE approval is required. Transit platforms, where railroad tracks cross a sidewalk, or where a pedestrian way enters onto a vehicular area without crossing a curb or curb ramp, also require detectable warnings. An example of the last requirement is the connection of a sidewalk to an at-grade parking lot. Ramps located at alleys or driveways do not require detectable warnings unless they are located at high traffic areas.

Engineer of Design and Environment Michael L. Hine

Illinois Department of Transportation
2300 South Dirksen Parkway / Springfield, Illinois / 62764

BDE PROCEDURE MEMORANDUM

NUMBER: 36-03

SUBJECT: Guardrail

DATE: October 14, 2003

The information relative to short radius guardrail in this memorandum should be considered as a new Section, 38-6.09 in the BDE Manual.

The information relative to Type B guardrail in this memorandum should be considered as an addition to Section 38-5.01(a)(2) in the BDE Manual.

Background

1. Short Radius Guardrail

   A sideroad or entrance within the length of need of a guardrail installation poses a severe challenge to the design of a safe roadside. The most common approach to this situation has been to install a short radius guardrail around one or both of the roadway radius returns. However, a vehicle impacting the radius at a high angle and speed may penetrate the barrier, or vault over the barrier after the posts lean back, creating a ramping effect. When penetration or vaulting does not occur, the vehicle will likely be decelerated at an excessive rate.

   Recognizing that it is often not practical to change the site conditions by relocating the roadway or entrance to allow for the proper length of need of guardrail, the 2002 edition of the AASHTO Roadside Design Guide (RDG) acknowledges that some compromise will be necessary. The RDG recommends that some effort be made to keep errant vehicles from going behind, through, or over the barrier. There are currently no radius guardrail systems accepted under the criteria of National Cooperative Highway Research Program Report 350 (NCHRP 350), the benchmark for roadside safety hardware.

2. Type B Guardrail

   Guardrail posts generally require a minimum of 2’ of earth embankment behind the posts to develop the necessary strength in order to function as designed. The material in this memorandum provides one alternative design that may be applied where the embankment hinge point occurs at the back of the posts.

Applicability

The procedures included in this memorandum will be effective for projects on the State highway system beginning with the April 1, 2004 letting.

Procedures – Short Radius Guardrail

1. Preliminary Engineering

   During Phase I of a project, as stated in Section 11-2.04(g) of the BDE Manual, the designer should evaluate and establish roadside barrier warrants. Virtually any decision taken may affect right of way needs, earthwork quantities, or other issues that must be recognized early in project development. Decisions to address safety work at a later phase of the project may severely restrict the designer's options. Design exceptions require approval and documentation in the preliminary engineering report.

2. Design Alternatives

   A. Relocate or Close the Intersecting Roadway/Entrance

      This decision is the preferred solution and should be considered during project scoping, or at least during Phase I preliminary engineering. This decision will involve consideration of project scope, cost, and impacts to adjacent properties and the environment. Obviously, this will not always be possible, but when it is, it will provide the most positive solution to the roadside safety issue. If it is undertaken, additional consideration should be given to flattening sideslopes, widening embankments, etc. to reduce the need for the barrier.

   B. Terminate the Guardrail in Advance of the Intersecting Roadway

      When relocating or closing the roadway/entrance is not feasible or practical and where the nominal length of need may fall within the intersecting roadway, or just beyond it, the designer may choose to truncate the standard guardrail with an approved terminal section or impact attenuator in advance of the roadway. The decision to address the need for guardrail in this manner should be where judgment or analysis indicates this is preferable (flat slopes, minimal drop off) to the additional hazard posed by a short radius guardrail installation.

      Termination of guardrail short of the length of need is considered a design exception and must be documented in the Phase I preliminary engineering report.

C. Radius Guardrail

If relocating a roadway/entrance or terminating the guardrail short of its length of need cannot be accomplished, the designer may consider radius guardrail systems.

Any radius guardrail system will impose constraints on how close it can be installed to a bridge, what radius can be used, and how far it must run along the intersecting sideroad.

The RDG recognizes the use of curved guardrails that were crash tested to National Cooperative Highway Research Program Report 230 (NCHRP 230), the predecessor to NCHRP 350. NCHRP 230 represents a past standard, now outdated, especially with regard to pickup trucks, a common vehicle in the current fleet. Currently, there is one design of radius guardrail that meets the NCHRP 230 criteria. This design is shown in Attachment A to this memorandum.

The design noted above as accepted under the NCHRP 230 criteria employs weakened posts in the radius area. These weakened posts break away upon impact, allowing the rail to form a deep pocket to gradually decelerate and capture the impacting vehicle. However, as the testing was successful only at the NCHRP 230 level, and in some cases only at reduced speeds, it still represents a significant compromise in roadside safety.

By contrast, the use of standard strong post guardrail imposes additional compromises to safety. The strong posts do not break away, but rather are pushed back on impact. At some point, the vehicle can then ride up and over the posts, vaulting the rail. When the strong post system does capture a vehicle, the deceleration may be excessive.

When terminating the radius guardrail system, the guardrail on the intersecting roadway should be completed to any required length of need and terminated with an appropriate end treatment. On a very low speed roadway, such as a private driveway, this may be a Type 2 terminal. On most public roadways, or other roadways where higher speeds are possible, a Type 1 Special terminal should be used. These terminals are important to provide adequate anchoring of the radius system, and safety for the traffic on the intersecting roadway.

1. <u>NCHRP 230 Design (Weakened Post Design)</u>

   The decision to use the NCHRP 230 design is considered as a design exception, and must be documented in the Phase I preliminary engineering report.

   Adherence to the details with the NCHRP 230 design is important. Performance can be critically impacted by rates of curvature, use

of breakaway Controlled Releasing Terminal (CRT) posts, adequate deflection zone behind the curved guardrail and the appropriate end anchorages.

To allow for proper system performance, the designer should be aware of several important constraints:

a. Use of the attached detail is limited to the radii shown and to intersection angles of 85 to 95 degrees. No extrapolations to radii shorter than 8.5' or longer than 35' should be attempted. Any job-specific designs for intermediate radii and/or other intersection angles should incorporate all features of posts, attachment, etc., and should use only full length (12'-6") guardrail panels, shop bent to the design radius in 5' increments.

b. Because of the required deflection distance, it requires a considerable clear area behind the radius and adjacent guardrail. This area is detailed on Attachment A with the x and y coordinates.

c. The slope in front of the installation should not be steeper than 15H:1V. Before installing this detail where there is superelevation on the main roadway, the designer should perform special analysis to determine the potential for vaulting of a vehicle. Contact BDE for assistance.

d. It is important to have the 2' earth embankment behind the CRT posts to provide adequate bearing strength if hit. It is desirable that the slopes behind the guardrail not be steeper than 2H:1V.

e. When used in close proximity to a bridge, this design should not be used unless there is room to apply an approved transition to the bridge rail (Type 6, or Type 6A).

f. From FHWA Technical Advisory 5040.32: "In crash testing, some heavy debris was observed flying about in the area behind the impact. Judgment must be used when installing these sections where people are likely to be present in the area behind the curved section."

   The acceptable crash tests involving these designs were limited to 50 mile per hour impact speeds for the large car. The designs did not pass for a 60 mile per hour impact. However, the strong post system is also deficient at high speeds, and this design may be used over the strong post radius rail system where a short radius system is inevitable at these speeds.

Because the NCHRP 230 radius guardrail system still represents some compromise in roadside design, we should make an attempt to shadow it from impacts. This can be done by applying a tangent run of guardrail (minimum is two Type 1 Special terminals, back-to-back) on the approach side of the intersecting roadway.

2. Radius Guardrail Using the Strong Post Design

The decision to use the strong post design is considered a design exception, and must be documented in the Phase I preliminary engineering report.

The "Strong Post" design is simply the Department's current Standard Type A guardrail installed on the necessary radius. Type B should not be used in radius applications, as it increases the likelihood that posts will only deflect partially and launch a vehicle.

This design may be considered where none of the above alternatives apply, or where special studies, site history, etc. indicate it is appropriate.

Because the strong post radius guardrail system represents some compromise in roadside design, we should make an attempt to shadow if from impacts. This can be done by applying a tangent run of guardrail (minimum is two Type 1 Special terminals, back-to-back) on the approach side of the intersecting roadway. (Figure 7.16 in the 2002 Roadside Design Guide.)

D. Other Solutions

Other solutions may be possible on a case-by-case basis. For example, in some locations it may be feasible to locate an impact attenuator system in the radius area.

Procedures – Type B Guardrail Placed at Embankment Hinge Point

1. Design Information

Type B Guardrail may be installed when the distance from the back of guardrail posts to the embankment hinge point is from zero to two feet. The reduction in support from the embankment will increase the potential deflection of the system, and allowance for 3 feet (920 mm) deflection should be made when this design is used.

Engineer of Design and Environment Michael J. Hanie

Attachments

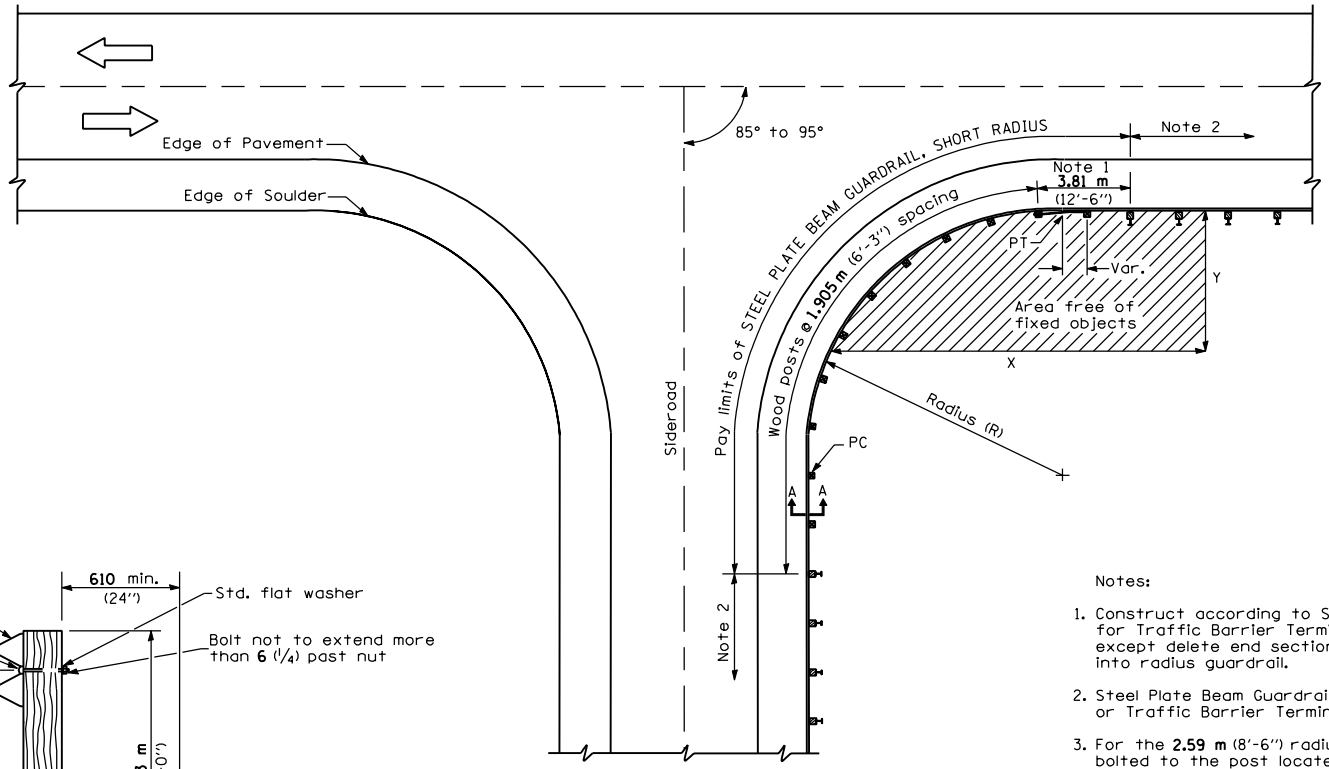

PLAN

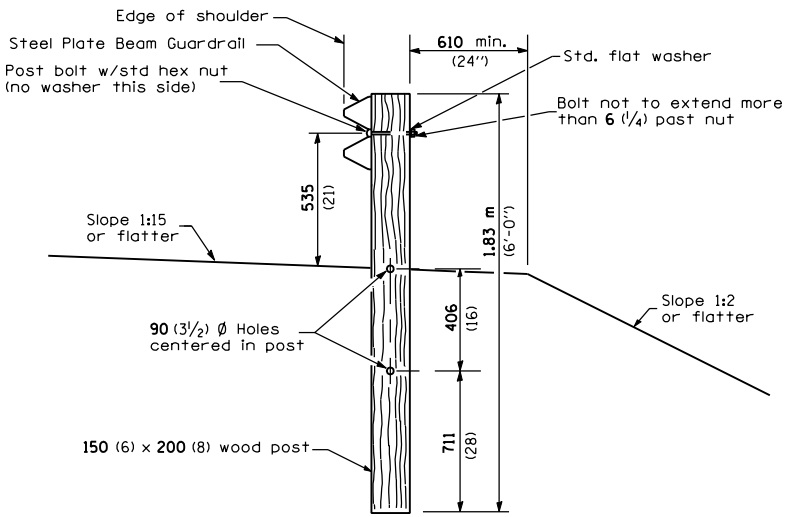

SECTION A-A

INSTALLATION CHARACTERISTICS PER DESIGN RADIUS (R)			
R	NO. OF WOOD POSTS	X	Y
2.59 (8'-6")	5 (Note 3)	7.6 m (25')	4.6 (15')
5.18 (17'-0")	6	9.1 m (30')	4.6 (15')
7.77 (25'-6")	8	12.2 m (40')	6.1 (20')
10.67 (35'-0")	11	15.2 m (50')	6.1 (20')

Notes:

1. Construct according to Standard 631011 for Traffic Barrier Terminal Type 2, except delete end section and splice into radius guardrail.
2. Steel Plate Beam Guardrail Type A, Type B, or Traffic Barrier Terminal as specified.
3. For the 2.59 m (8'-6") radius, the rail is not bolted to the post located at the midpoint of the curve.

GENERAL NOTES

All slope ratios are expressed as units of vertical displacement to units of horizontal displacement (V:H).

All dimensions are in millimeters (inches) unless otherwise shown.

DATE	REVISIONS

STEEL PLATE BEAM GUARDRAIL, SHORT RADIUS

BDE Memo 36-03 Attachment A

Illinois Department of Transportation
2300 South Dirksen Parkway / Springfield, Illinois / 62764

BDE PROCEDURE MEMORANDUM

NUMBER: 37-03

SUBJECT: Documenting Microscale Analysis Information

DATE: October 14, 2003

This memorandum supersedes the guidance on "Microscale Analysis" contained in Sections 23-2.02(e), 24-3.07(e), and 25-3.09(e) of the *BDE Manual 2002*. The information in this memorandum will be incorporated in the manual in a future update.

BACKGROUND

A new version 2.0 of the Illinois Carbon Monoxide (CO) Screen for Intersection Modeling (COSIM) was issued in May 2003. The update to COSIM reflects significant changes that have occurred in MOBILE 6, the current update of the USEPA vehicle fleet emissions model, including new emission rates, driving patterns, correction factors, fleet composition, and regulatory impacts. COSIM 2.0 includes a Pre-screen feature that replaces the 16,000 ADT criterion previously used for screening IDOT projects for CO microscale analysis purposes. The IDOT/IEPA Agreement on Microscale Air Quality Assessments has recently been updated to formally recognize the use of the COSIM Pre-screen feature for evaluating IDOT projects and to make other associated revisions. This memorandum revises the procedures for documenting CO microscale analysis information in project environmental documentation to reflect changes in COSIM version 2.0 and the IDOT/IEPA agreement.

APPLICABILITY

These procedures are applicable to State highway projects that are processed with Environmental Impact Statements or Environmental Assessments, that are processed under the Environmental Class of Action Determination (ECAD) procedures, and projects for which the environmental documentation is prepared in accordance with Section 22-2.05(b) of the *BDE Manual 2002*. These procedures also apply to other State highway projects processed as categorical exclusions if the projects involve addition of through lanes or auxiliary turning lanes.

PROCEDURES

The documentation requirements described below pertain to the "Microscale Analysis" topic in the Air Quality portion of the environmental consequences discussion for applicable projects.

Projects That Do Not Add Through Lanes or Auxiliary Turning Lanes

Under the terms of the IDOT-IEPA "Agreement on Microscale Air Quality Assessments for IDOT Sponsored Transportation Projects", projects that do not add through lanes or auxiliary turning lanes are exempt from the requirement for a microscale CO analysis. For projects that qualify for this exemption, enter the following statement in the environmental consequences section:

> *In accordance with the IDOT-IEPA "Agreement on Microscale Air Quality Assessments for IDOT Sponsored Transportation Projects", this project is exempted from a project-level carbon monoxide air quality analysis because it does not add through lanes or auxiliary turning lanes.*

Projects Involving No Sensitive Receptors and Projects Not Suitable for Use of COSIM 2.0

For projects that will add through lanes or auxiliary turning lanes but that either have no "sensitive" receptors (as defined in the COSIM 2.0 User's Manual) within 1000 feet of any intersection, or that do not fit the assumptions for use of the COSIM model (see User's Manual), contact the BDE Air Quality Specialist regarding evaluation of the need for further air quality modeling for CO and the documentation to include in the environmental consequences section of the environmental document or in the ECAD Record or Phase I Engineering Report.

Projects Subject to COSIM Pre-Screen

For projects that will add through lanes or auxiliary turning lanes and that fit the assumptions for use of the COSIM program, the first step in the microscale CO analysis process will be to use the Pre-screen feature in version 2.0 of COSIM to determine whether further air quality modeling is needed. If the project "passes" the Pre-screen (i.e., "worst case" assumptions indicate the project will not exceed the Carbon Monoxide NAAQS), enter the following statement in the environmental consequences section, ECAD Record, or Phase I Engineering Report, as appropriate:

> *A Pre-Screen analysis was completed for the proposed project. The results from this proposed roadway improvement indicate that a COSIM air quality analysis is not required, as the results for the worst-case receptor are below the 8-hour average National Ambient Air Quality*

Standard for CO of 9.0 ppm which is necessary to protect the public health and welfare.

(Note: On projects where this finding applies, the printout of the COSIM Pre-Screen Modeling Results generated by the COSIM program will include the preceding paragraph. This printout can be included in Phase I Engineering Reports to provide the necessary documentation that a COSIM air quality analysis is not required.)

Projects Subject to COSIM Screening Analysis

If the project "fails" the Pre-screen, a complete COSIM screening analysis should be conducted as the next step in the microscale CO analysis process. The COSIM analysis will indicate whether further detailed air quality analysis is needed. If the COSIM analysis indicates that the project "passes" (i.e., does not have the potential for causing a violation of the NAAQS for CO for any affected receptors), further detailed air quality analysis is not required. Complete and include the following paragraphs in the environmental consequences section:

The air quality effects of the proposed project were analyzed using the Illinois Carbon Monoxide Screen for Intersection Modeling (COSIM). The "worst case" analysis provided by the COSIM model indicated that the proposed undertaking does not have the potential for contributing to a violation of the National Ambient Air Quality Standards for CO. CO concentrations for the worst case receptor (i.e., residence) located [_____] (see Exhibit [__]) were as follows:

Existing ([year]) - ___ ppm; Build – Time of Completion (TOC) ([year]) - ___ ppm, TOC + 10 years ([year]) - ___ ppm, and Design Year ([year]) - ___ ppm; No Action - ___ ppm in [TOC year], ___ ppm in [TOC + 10 year], and ___ ppm in [Design Year].

Projects Subject to Detailed Project-Level CO Analysis

If the COSIM screening analysis indicates the project "fails" (i.e., that it has potential for contributing to a violation of the NAAQS for CO), or if the project does not fit the assumptions for use of the COSIM screening analysis, a detailed project-level CO analysis should be performed and documented. Districts should use the latest USEPA Mobile and air quality dispersion models, and should contact the BDE Air Quality Specialist for guidance on the latest inputs and modeling information. The results should be documented as described below:

For projects processed under the ECAD procedures, the findings of the detailed analysis should be documented by completing and including the following paragraphs in the ECAD Record.

A Carbon Monoxide (CO) analysis was completed for the worst case receptor (i.e., residence) located [_____] (see Exhibit [___]). Calculated CO concentrations were as follows:

Existing ([year]) - ___ ppm; Build – Time of Completion (TOC) ([year]) - ___ ppm, TOC + 10 years ([year]) - ___ppm, and Design Year ([year]) - ___ ppm; No Action - ___ ppm in [TOC year], ___ ppm in [TOC + 10 year], and ___ ppm in [Design Year].

If the results for an ECAD project are below the 8-hour CO NAAQS, also include the following statement:

The results from this roadway improvement indicate that concentrations are below the 8-hour National Ambient Air Quality Standard of 9.0ppm which is necessary to protect the public health and welfare.

If the results of the detailed analysis for an ECAD project exceed the 8-hour CO NAAQS, mitigation measures must be discussed with FHWA, USEPA, and IEPA. The District should contact the BDE Air Quality Specialist to initiate the necessary contacts with those agencies. Any such mitigation measures that will be incorporated in the project should be summarized in the ECAD Record.

For projects processed with an Environmental Assessment or Environmental Impact Statement, and for environmental documentation in Phase I Engineering Reports for applicable projects, the worst-case location and calculated eight-hour results of the detailed project-level CO analysis should be described in the environmental consequences section. Districts should contact the BDE Air Quality Specialist for guidance on documenting the results. Comparison of these results to the NAAQS for CO will determine whether the project supports the maintenance of the CO NAAQS in Illinois. Analysis results below the eight-hour CO NAAQS (less than 9 ppm) will indicate no impacts to the local atmospheric conditions that are necessary to protect the public health and welfare. Analysis results above the eight-hour CO NAAQS will indicate impacts that will require discussion of mitigation measures with FHWA, USEPA, and IEPA. Any such mitigation measures should be described in the environmental consequences section.

Engineer of Design and Environment Michael L. Hine

Illinois Department of Transportation
2300 South Dirksen Parkway / Springfield, Illinois / 62764

BDE PROCEDURE MEMORANDUM

NUMBER: 38-04

SUBJECT: Errata for the BDE Manual 2002 Edition

DATE: January 2, 2004

This memorandum lists errata for the BDE Manual 2002. These items will be corrected in the next edition of the manual. Questions regarding the errata should be directed to the Policy and Procedures Section in the Bureau of Design and Environment.

Page 2-2(44)	In the second bullet-point the word “considera-tion” should be “consideration”.
Page 3-2(30)	In the second bullet-point the word “considera-tion” should be consideration”.
Page 7-3(11)	Figure 7-3E correct the striped out area (to the left of the raised median) to reverse the angle of the striping.
Page 19-1(6)	Section 19-1.03 – In line 7 revise “Department of Commerce and Community Affairs” to “Department of Commerce and Economic Opportunity”.
Page 24-3(19)	The first paragraph on the page should be indented and italicized (as is the third paragraph on the page).
Page 26-7(2)	In the fifth bullet-point under 26-7.04, change “BLRS” to “IDOT”.
Page 26-11(5)	Add the following at the end of the 3rd paragraph: “…quality. The district should contact BDE relative to regionally significant non-Federal projects in nonattainment areas for guidance regarding these special conditions.”
Page 27-2(13)	The last paragraph at the bottom of page 27-2(13) should be moved to the top of page 27-2(18).
Part III App. A	On page 26 of the CEQ regulations, correct the first part of the third sentence of the “Cooperating agency” definition to read “A State or local agency of similar qualifications…”.
Part III App. A	On page 3 of 23 CFR 771, in the first line of 771.111(e), change “lane” to “land”.

Page 36-2(10)	Figure 36-2E – In the Large Island design, the Intermediate Island design, and the Small Island design, revise "B-6.24" to "M-6.24".
Page 37-4(5)	Figure 37-4B – In the "With Median Barrier" illustration, revise the median barrier width dimension to 30".
Page 37-5(12)	Figure 37-5G - On the right side of the drawing, change the lane width dimension at the end of the taper from 34' to 32' and the width dimension on the raised curb median from 11' to 10'.
Page 39-6(4)	Footnote 13 - Revise "15 ft 0 in" to "14 ft 9 in".
Page 45-4(3)	Figure 45-5A(Metric) - In the "New Lanes (1a)" column, change the Design Speed information from "100 km/h(3a)" to "110 km/h(3a)."
Page 49-3(26)	Figure 49-3I - In column II delete "Principal Arterials".
Page 54-5(1)	In the next to last sentence of the first paragraph in 54-5.01(c), change "Section 53-4.02(c)" to "Section 53-4.08(c)".
Page 56-5(7)	Revise the first sentence of Section 56-5.04(d) to read "Design criteria for highway lighting projects vary according to the roadway classification, area classification, and pavement type." Revise the second sentence in this section to read "Figures 56-5B and 56-5C present the illuminance and luminance design criteria used by the Department.
Page 64-1(10)	Figure 64-1A – In the first column and the 5th line down PRECAST CONCRETE BRIDGE SLAB under Measured Units column change the words SQUARE YARD to SQUARE FOOT and,
Page 64-1(10)	Figure 64-1(A) - In the "MEASURED UNITS" column for the "PRECAST, PRESTRESSED CONCRETE DECK BEAMS" item (seventh line down) change "SQUARE YARD" to "SQUARE FOOT" and in the "DEGREE OF ACCURACY column, change "0.5" to "1".
Page 64-2(12)	Change the "Example" number above the "Earthwork Schedule" title from "64-2.04(1)" to "64-2.04(3)" and in the "Earth Excavation" column, change the "Cubic Yard" figure for "Sta. 410+00 to 430+00" from "2000" to "3000" and change the "Total" from "10,000" to "11,000".

Engineer of Design and Environment Michael L. Hine

Illinois Department of Transportation
2300 South Dirksen Parkway / Springfield, Illinois / 62764

BDE PROCEDURE MEMORANDUM

NUMBER: 39-04

SUBJECT: Concrete Barrier

DATE: March 8, 2004

This memorandum adds to the information in Sections 38-5.01 and 38-7 of the BDE Manual. It also revised Sections 38-7.02 and 38-7.05(c).

Background

Effective January 1, 2004, the department revised its design of the double-faced, 32 in (810 mm) concrete barrier to incorporate the change to the F-shape. Concurrently, a Standard was issued for the 42 in (1065 mm) barrier.

While Chapter 38 of the BDE Manual discusses warrants for and application of these two versions of concrete barrier, more guidance for selecting one barrier height versus the other is needed.

The 32 in (810 mm) concrete barrier is accepted at Test Level 4 under NCHRP 350. At this performance level, the largest design vehicle is a single unit truck with a mass of 17,600 lb (8000 kg). Testing shows that while this vehicle is safely redirected, it rolls to the side and rides along the top of the barrier. The 42 in (1065 mm) barrier is accepted under the NCHRP 350 criteria at Test Level 5. At this higher performance level, the largest design vehicle is the 79,200 lb (36,000 kg) tractor-trailer truck. For this barrier, the tractor-trailer units are redirected, but likewise show a tendency to roll and slide along the top of barrier. Neither of these barriers meets NCHRP 350 Test Level 6 for a 79,200 lb (36,000 kg) combination with a tanker trailer.

There are no nationally recognized warrants for selecting the height of concrete barrier. Some States have developed guidelines based on traffic levels, geometrics, and other factors. These offer some insight, but do not appear to be directly applicable in Illinois. The Illinois Department of Transportation has developed practices and experience in the use of the two systems. This memorandum draws on a questionnaire to the Districts and represents a consensus of best practices in Illinois for the use of the 42 in (1065 mm) concrete barrier. This memorandum will reinforce and further these best practices.

Applicability

The following procedures are applicable to projects on the State highway system where concrete barrier is warranted in the median or on the roadside.

Procedures – Revised Sections

38-7.02 Types

The *Illinois Highway Standards* present the details on the median barrier types used by the Department. The following briefly describes each type:

1. Steel Plate Beam Guardrail, Type D. The Type D, double steel plate beam guardrail median barrier with strong posts, is a semi-rigid system. Its performance is similar to the steel plate beam guardrail system. This median barrier is most applicable to medians with intermediate width and/or moderate traffic volumes. Another application of the Type D median barrier is for the separation of adjacent on/off ramps at interchanges.

2. Concrete Barrier. The concrete barrier is a rigid system with the F shape face configuration. It will rarely deflect upon impact. While a double faced barrier is normally used, a single faced concrete barrier may be necessary where crossover crashes have been an issue on wider medians or where the median barrier must divide to go around a fixed object in the median (e.g., bridge piers). In this situation, the obstacle is typically encased within concrete to create a level surface from barrier face to barrier face.

The 32 in (815 mm) tall concrete barrier, a NCHRP 350 Test Level 4 design, may not successfully redirect heavy vehicles if the impact speed and angle are high. Therefore, on some highways it may be warranted to install the 42 in (1065 mm) tall concrete barrier. Concrete barriers 42 in (1065 mm) tall are considered NCHRP 350 Test Level 5 designs. However, these taller walls restrict sight distance around horizontal curves and restrict vision for authorized personnel (e.g., police) who wish to view the opposing lanes.

38-7.05(c) Types

The following describes those glare screens used by the Department:

1. Concrete Glare Screen. When glare screen is warranted for a section of roadway with concrete barrier, the designer may specify a concrete glare screen. See *the Illinois Highway Standards* for details. This type of glare screen is advantageous on high volume routes due to its low maintenance.

2. Glare Screen Blades. As an alternative to the concrete glare screen, a series of thin vertical blades may be mounted on top of the concrete barrier. The designer must specify the spacing, height, and longitudinal

spacing of the blades on the plans. See the *Illinois Highway Standards* for details.

3. Chain Link Fence. If a median barrier is not warranted but a glare screen is warranted, the designer should install a chain link fence glare screen using a fabric woven with a maximum 1 in (25 mm) opening between parallel wires. In addition to alleviating glare, the fence will control access across the median. This type of glare screen is also effective in controlling glare between the mainline and adjacent frontage roads because an access control fence is usually required.

Procedures – Added Information

1. Preliminary Engineering

   During Phase I of a project, as stated in Section 11-2.04(g), the designer should identify whether or not a median or roadside barrier is warranted. The selection of barrier type and height should be made as part of the Phase I engineering report for the project. This decision is especially important for early and correct coordination with bridge cross section details.

2. Design Considerations

   A. Height

      Generally, where a concrete barrier is selected, the 42 in (1065 mm) barrier may be used when one or more of the following "contributing factor" dot points is met. Such factors should be documented in the Phase I report to support the decision for the taller barrier height.

      1. Contributing factors for use of 42 in (1065 mm) concrete barrier:

         - High speed freeways with high truck volumes. A high speed facility, defined as 55 mph (90 km/h) or higher posted or design speed. High truck volume is defined as 5000 or more multiple-unit (MU) trucks in the total ADT for the facility.

         - History of median crossover crashes involving large trucks.

         - Appurtenances on concrete barrier. When lighting or other appurtenances will be installed atop concrete barrier, the 42 in (1065 mm) barrier may be preferable to the 32 in (810 mm) barrier. This is because the taller barrier will reduce, but not eliminate the occurrence of errant trucks sliding along the top of the barrier.

- Sharp curves, defined as those for which do not meet current criteria for the facility's design speed. Higher encroachment rates are expected on sharp curves, and such alignments aggravate headlight glare.

- Consistency with established practice or adjacent sections. Provide corridor continuity of barrier design for similar conditions.

- Special cases, such as keeping errant vehicles out of mass transit facilities located in a median, or other critical areas where errant vehicles could create catastrophic consequences.

2. Locations where 42 in (1065 mm) barrier should not be used:

   - The 42 in (1065 mm) concrete barrier should not be used on non-freeways. It would reduce or eliminate sight distance for turning movements.

   - The 42 in (1065 mm) concrete barrier should not be used to separate traffic lanes moving in the same direction (e.g., merging ramps). This would reduce visibility of adjacent traffic in areas of merging or divergence. Other cases may be identified on a case-by-case basis.

B. Placement at Locations other than Medians

1. In some cases, on the outside shoulder of a roadway, guardrail may not be a sufficient roadside barrier. Uses for concrete barrier on roadsides could include:

   a. Need to reduce headlight glare into nearby buildings, or other sensitive areas.

   b. Need to mitigate against headlight glare between frontage roads and the mainline, especially where alignments direct the headlights directly at opposing traffic.

   c. Need to reduce the potential for errant vehicles entering critical areas just beyond the shoulder, especially in high volume urban areas with:

      - Elevated structures over occupied areas. (This applies principally to the structure itself.)

      - Sharply curved roadways.

      - Accident history or potential shows increased risk.

d. Need to minimize repairs and maintenance. In high traffic locations it may be unacceptable to have damaged sections of barrier, and to impose repair operations on the traffic flow. Concrete barrier will often remain undamaged after an impact, while guardrail will require more frequent maintenance and repairs.

The cost increment from guardrail to concrete barrier is more significant than that from 32 in (810 mm) to 42 in (1065 mm) concrete barrier. For roadside barriers, cost comparisons and evaluations of the relative merits of the systems should be made before any decision to use concrete barrier on the outside of the roadway.

C. Consistency of Design

Where the 42 in (1065 mm) concrete barrier is selected, it should be applied consistently throughout the section and/or corridor. Barrier height should not be designed on a site by site basis, but rather, limits of 42 in (1065 mm) barrier should be set to bracket all required locations, and applied throughout. Only when the 32 in (810 mm) barrier can be used on a continuous basis should the height revert to this lower level.

The use of a 42 in (1065 mm) concrete barrier in the median does not imply the appropriate treatment for a roadside barrier along outside shoulders. Generally, steel plate beam guardrail, a Test Level 3 system, will be the barrier of choice for outside shoulders on roadway, and will be coordinated with the use of conventional 34 in (860 mm) bridge parapets. The decision to use concrete barrier at 32 in (810 mm) height or 42 in (1065 mm) height on outside shoulders will be a job-specific design element.

D. Coordination with Glare Screen

The procedures of Chapter 38-7.05(d) cover design of glare screen. However, calculation of detailed height requirements does not imply that the height of glare screen should vary repeatedly from location to location along a job. As with the design of concrete barrier, select the height to bracket the needs of the section, or logical segments. In addition, the height to the top of glare screen should be made using Standard devices, and in the following discrete steps.

If the 32 in (810 mm) barrier is being used, and glare screens are needed, the most likely application will be to add a glare screen to the 32 in (810 mm) barrier.

However, consideration may be given to using the 42 in (1065 mm) barrier alone or with a glare screen. While the 42 in (1065 mm)

barrier may not be necessary for truck volumes, it will both increase truck crashworthyness and raise the effective height of the glare screen. This is most likely to happen either if truck volumes are negligible such that the 42 in (1065 mm) height will suffice, or when a height of more than 51 in (1295 mm) is required.

For locations where the 42 in (1065 mm) barrier is to be used, the concrete glare screen may be added to reach a height of 61 in (1550 mm).

If heights greater than 61 in (1550 mm) are required, then glare screen blades, or special designs using concrete may be considered. The addition of taller concrete barrier or concrete glare screen raises issues regarding control of debris scatter from a collision, as well as the necessary shape and slopes for the taller sections. Contact BDE to coordinate any designs using concrete glare screens above a height of 61 in.

E. Special Issues

The use of concrete barrier often is coincident with restricted right of way and other competing needs for space. Concrete barriers consume available width of right of way. This can complicate the design. This should be recognized early in the project development so budgets can reflect special details, and time for detailed design can be allotted. Where right of way is restrictive, shoulder widths may be affected, and accommodation on existing bridges may be a problem. Special designs, such as vertical concrete barrier, may be possible. Contact the Bureau of Design and Environment for information on this or other special designs.

Where a concrete barrier is added in an existing median, especially when adding lanes, there may be a vertical offset to the profile in superelevated sections. This will create a need for an asymmetrical barrier cross section, and will require a detailed design of the barrier in conjunction with the Standard. It may preclude slipform construction.

Concrete barrier often serves as the base for light poles. The design should consider and provide locations for conduit and other necessary hardware (possibly within or under the barrier). These details need to be coordinated with the Lighting Unit in the Bureau of Design and Environment.

Retrofitting of concrete barrier in an existing unpaved median will necessitate revisions to the drainage plan. The concrete barrier should not be placed at the high point of the cross section, as snow melt and other runoff will cross the traffic lanes. As much as possible, drainage near the median should be toward the barrier, with provision

of inlets and subsurface drainage. Avoid placing the flowline coincident with longitudinal joints.

Median barriers need to allow for emergency access. There are various options, such as overlapping flared ends to create an opening without exposing an end to oncoming traffic, leaving gaps shielded by impact attenuators, or providing movable gating sections.

Flaring the ends to create an opening requires a widened median section, and/or encroachment on the shoulder. Also, the movement for a vehicle to use this opening is more complex than for other options. This option may require alignment offsets for the through lanes.

When using impact attenuators or movable gates with the 42 in (1065 mm) barrier, the barrier should be transitioned to match the device attachment. The movable gates currently available are a unique, proprietary system. Use of proprietary products is generally prohibited, and exceptions are addressed in Chapter 66-1.04(b)(2) of the BDE Manual.

Engineer of Design and Environment Michael L. Hine

DLP:cs:s:\gen\wpdocs\cks\39-04

Illinois Department of Transportation
2300 South Dirksen Parkway / Springfield, Illinois / 62764

BDE PROCEDURE MEMORANDUM

NUMBER: 40-04

SUBJECT: Addressing Impaired Waters/TMDLs in Project Environmental Documentation

DATE: June 30, 2004

This memorandum supplements the information in 23-2.02(i), 24-3.07(i), 25-3.07(f), and 25-3.09(i) of the BDE Manual. The information in this memorandum will be incorporated in the Manual in a future update.

Background

Under Section 303 of the federal Clean Water Act, the Illinois Environmental Protection Agency (IEPA) is required to identify waters of the State that do not meet applicable water quality standards or that do not fully support their designated uses. Use categories for water bodies in Illinois include the following: aquatic life, primary contact (swimming), secondary contact (recreation), public water supply, fish consumption, and indigenous aquatic life). For each water body, IEPA will determine one of three possible "use-support" levels for the categories designated for that water body: fully supporting (Full), partially supporting (Partial), or not supporting (Nonsupport). Full use support means that the water body attains the designated use. Partial use support means that the water body incompletely attains the designated use. Nonsupport means the water body does not attain the designated use. All water bodies assessed as partial support or nonsupport for any designated use are identified as "impaired" and are included on a list, referred to as the Section 303(d) list. For impaired water bodies, IEPA identifies potential "causes" and "sources" of impairment for the designated uses.

The Clean Water Act requires development of a Total Maximum Daily Load (TMDL) for each pollutant of an impaired water body. The TMDL determines the load, or quantity, of any given pollutant that can be allowed in a particular water body and establishes the pollutant reduction goal necessary to improve an impaired water body. Limitations imposed by TMDLs may affect highway projects located in proximity to impaired waters where the projects have the potential to contribute pollutants that are subject to the limitations. Accordingly, the Section 303(d) list waters, and any associated TMDLs, must be appropriately considered and addressed in highway project development.

As of the issuance date for this memorandum, the Section 303(d) list, along with information on completed TMDLs and TMDLs under development, is available on the IEPA Internet site at http://www.epa.state.il.us/water/tmdl/.

Applicability

The procedures in this memorandum are applicable to all State highway projects.

Procedures

Section 303(d) Waters Information

When a proposed project may result in impacts to water quality/resources, the environmental documentation for the action should identify whether any of the potentially affected water bodies or water body segments are included in the current Section 303(d) list. For Environmental Impact Statements and Environmental Assessments, this information should be a part of the "Affected Environment" discussion. For other types of environmental documentation, the information identifying the Section 303(d) list waters should be a part of the environmental consequences discussion. If water bodies or segments identified in the Section 303(d) list will be potentially affected, indicate the year for which the referenced Section 303(d) list was prepared and include the following information from the list for each potentially affected water body or segment:

- Water Body Name – Indicate the name of the water body shown on the list.
- Designated Uses – Indicate the designated uses listed for the water body (use the word descriptions rather than the numeric codes) and the use-support level (i.e., Full, Partial, or Nonsupport) for each designated use.
- Causes – Indicate the causes of impairment listed for the water body (use the word descriptions rather than the numeric codes).
- Sources – Indicate the sources listed for the causes of impairment (use the word descriptions rather than the numeric codes).

For each potentially affected water body or segment on the Section 303(d) list, also indicate whether a TMDL is under development or has been finalized.

Environmental Consequences Discussion

The discussion of the project's effects on Section 303(d) listed waters should address how those effects relate to the various constituents ("Causes") that resulted in the impaired waters designation. Indicate whether the project may contribute to an increase or decrease in any of the constituents causing the impairment. If the project would potentially contribute to an increase in those constituents, identify the specific constituents, describe the anticipated

increase, and discuss practicable mitigation measures that can be implemented to reduce or eliminate that contribution. Also describe the anticipated contribution level from the project with the mitigation measures that will be implemented.

If a TMDL has been finalized for the impaired water, discuss any aspects that would apply to construction or operation of the highway project (e.g., Best Management Practices) and discuss how the project will respond to the TMDL provisions.

Engineer of Design and Environment Michael L. Hine

Illinois Department of Transportation
2300 South Dirksen Parkway / Springfield, Illinois / 62764

BDE PROCEDURE MEMORANDUM

NUMBER: 41-04

SUBJECT: Delegation of Approval Authorities to Districts

DATE: June 30, 2004

This memorandum modifies information in Chapters 2, 3, 11, 12, 14, 15, 23, 24, 26, 36, 37, 39, 53, and 54 of the *BDE Manual*. The changes presented below will be incorporated in a future update of the *BDE Manual*.

BACKGROUND

The policy and procedure changes discussed in this memorandum implement a Division of Highways initiative for delegating more approval authority to the District Offices. This delegation of authority supports the goal of giving Districts primary accountability for meeting project scope, schedule, and budget objectives while also ensuring that project approval decisions are consistent with established highway safety standards and environmental analysis requirements.

Qualifications have been developed such that Districts can pursue approval authority for specific positions if staffing permits. The District Engineer will be responsible for determining staff capabilities, seeking District approval authority, and requesting assistance from Headquarters should the District staff experience be insufficient for the required work. As an ultimate goal, within two years, Districts would fill positions with able and experienced staff. With budget constraints and staff turnover, it is understood that this process will be an evolving one, where responsibilities will shift periodically between the District Offices and Headquarters. Process reviews and District coordination meetings will ensure proper and consistent application of policy and quality compliance.

APPLICABILITY

The procedures in this memorandum are applicable to project approval decisions after June 30, 2004.

PROCEDURES

Phase I Design Approval Process

For the Phase I design approval process, changes are being implemented to delegate more approval authority to District Offices in four areas: Design Approval of Phase I Engineering Reports, Design Exceptions, Geometric Approval, and Pavement Design Approval. Attachment 1 provides an overview of the changes and the following sections discuss each in more detail.

Design Approval of Phase I Reports

Effective with the issuance of this memorandum, Districts are no longer required to submit Phase I Engineering Reports to BDE for review or approval except for those involving a major new alignment addressed by Corridor Reports, Feasibility Study Reports, and Design Reports. Projects will require FHWA review and approval in accordance with the Project Oversight Agreement between IDOT and FHWA. Districts shall submit Phase I Engineering Reports for such projects directly to FHWA for review and approval. FHWA will provide comments and/or approval directly to the Districts. Districts shall be responsible for addressing any comments provided by FHWA. Procedures in the *BDE Manual* will remain in effect with the proviso that language in those sections which require submittal of Phase I Engineering Reports to BDE for review and approval may be ignored, except as noted above. Changes in the design approval procedures give the Districts primary accountability for ensuring that projects conform to the requirements in the *BDE Manual*.

All projects except for SMART and 3P projects without design exceptions shall be discussed at the District coordination meetings. Representatives from BDE and FHWA will attend the coordination meetings and provide input with regard to the adequacy and consistency of policy interpretation as well as design analyses and other information as warranted. Discussion of design aspects at coordination meetings will provide the opportunity for Districts to address issues and concerns, and to seek guidance from BDE and FHWA. Districts will be responsible for ensuring that Phase I Engineering Reports appropriately reflect provided input. Coordination with the Bureau of Bridges and Structures will still be required for structures impacted by projects to ensure adequate loading capacity.

Responsibilities of the Headquarter's Detour Committee will be assumed by each District. District Detour Committees shall be comprised of a standing team of representatives from the District Bureaus of Program Development, Project Implementation, Local Roads, and Operations. Detours adjacent to or encompassing routes in another District shall be coordinated with the affected District Detour Committee. Traffic Management Analysis (TMA) plans shall be approved by the District Detour Committee.

Design Exceptions

The design process is driven by the establishment of fundamental design controls. There are occasions when the application of full design criteria may produce an unacceptable or infeasible solution. Judicious application of design exceptions is appropriate when necessary, especially in a context sensitive design environment, as long as safety and legal risks are understood by the designer, are considered acceptable given site-specific conditions, and are well documented. The importance of documentation supporting decisions for design exceptions is critical for legal purposes.

A recent FHWA/IDOT joint process review determined that IDOT has a formal and well-documented process for design exceptions. The design exception process does vary somewhat from District to District. The review team recommended a more uniform process throughout the state. With the implementation of Context Sensitive Solutions (CSS), this is even more critical. Because of the need for statewide consistency of the design process, BDE will continue to be involved in the design exception approval process.

Most design exceptions have historically been presented at the District coordination meetings. BDE concurrence has been granted at the coordination meetings when adequate justification has been provided. This allows for timely inclusion of the design exception into the design process. This method shall continue. In addition, all design exceptions shall require the use of a design exception request and approval form, with attachments if needed. Design exceptions for policy resurfacing thickness shall require a more formal request to BDE through a memorandum with proper documentation as detailed in Chapter 53 of the *BDE Manual*. Design exceptions not approved by BDE at or subsequent to coordination meetings will be forwarded by BDE to the Director of Highways and Deputy Director for Program Development for a final decision. Design exceptions presented to the Director will be submitted electronically documenting the requested design exception, the District's justification for the exception, and BDE comments. The Director will discuss the design exception with the District Engineer before a final decision is made.

Design exceptions on projects with full FHWA oversight, require FHWA approval. Districts shall present the design exception and justification at the District coordination meeting and submit a formal request to FHWA in accordance with the Project Oversight Agreement between IDOT and FHWA. FHWA will provide a formal response to the District.

Design exceptions shall be clearly justified and documented. The justification shall include a combination of accident analysis, cost comparisons, magnitude of impacts, capacity analysis and other relevant information as to the rationale and basis for the design exception. (Safety cannot be comprised through the design exception process to meet "Scope/Schedule/Budget".) A benefit/cost ratio may be included if deemed relevant to the decision making process. As further documentation for design exceptions, the Design Criteria Checklist in

the Appendix of Chapter 31 of the *BDE Manual* shall be completed for all construction, reconstruction, and 3R projects. The Checklist shall be included in the Phase I Engineering Report and also included as part of the project file. In addition, BDE will develop a database where all design exceptions will be documented. This will assist with the consistency of application of design exceptions and expedite the approval process further.

Geometric Approval

Geometric designs such as Intersection Design Studies and Interchange Design Studies represent some of the most critical parts of Phase I Engineering Reports with respect to the safety and operational quality of the highway facilities. These designs are some of the most complex and technically rigorous portions of the preliminary engineering process. Proficiency in geometric design takes years of experience, training and hands-on work to achieve. Great care must be taken in choosing those individuals responsible for the development and approval of such designs, and the end products must be closely monitored for quality compliance.

Henceforth, Districts are eligible to become qualified to approve all geometric designs they produce. Attachment 3 contains requirements prerequisite to consideration for qualification. A Licensed Professional Engineer in the position of Geometrics Engineer is required. Once qualified, Districts can approve all geometric designs they produce. However, design exceptions included in any geometric design must be approved through Headquarters as outlined in the preceding section of this memorandum.

The geometric designs of Districts not qualified for geometric approval will continue to be reviewed and approved by BDE, as has been done historically. This is true for Districts where the District Engineer has not requested anyone to be qualified, as well as for those Districts for which qualification has been rescinded. Although BDE review and approval are not required, qualified Districts may request BDE assistance in the processing of any geometric design.

Access Justification Reports (AJR's) and access control changes on Interstates will continue to be coordinated by Headquarters. This is due to the complex nature of the designs and issues involved, and the need for statewide consistency. BDE will review the documents, and the Director of Highways, the Deputy Director for Program Development and the District Engineer will jointly approve the documents for transmittal to FHWA for final Federal approval.

Pavement Design Approval

Because of the sensitive and competitive nature of the pavement design and selection process, BDE will maintain responsibility for this process. However, to reduce a portion of the workload both within the District offices and Headquarters, the quantity threshold has been raised. Pavement design

submittals to BDE are required for designs involving more than 10,000 yd², high stress intersections, experimental pavements, or any special designs or design exception requests. Design exceptions and special designs will be forwarded to the Director of Highways for final approval. Informational copies of the approved design shall be submitted to BDE for designs involving more than 4750 yd².

The selection of the pavement design alternatives will continue to be based on the criteria established in Chapter 54 of the *BDE Manual*. Pavement designs with a life cycle cost difference of 10% or less will be submitted to the Pavement Selection Committee. The Pavement Selection Committee will select a pavement type and forward this recommendation to the Director of Highways for final approval.

Approved pavement designs shall be included in the Phase I Engineering Report.

Environmental Approval Process

For the environmental approval process, changes are being made to delegate more authority to District Offices for Environmental Assessments (EAs), Findings of No Significant Impact (FONSIs), Environmental Class of Action Determination (ECAD) documentation, Section 4(f) Evaluations (other than combined Section 106/4(f) documents), and Group II Categorical Exclusions (CEs). Attachment 2 provides an overview of the changes and the sections below provide additional details.

NOTE: The changes being implemented at this time do not affect the procedures currently in place for Environmental Impact Statements (Chapter 25), Special Environmental Studies other than Section 4(f) Evaluations (Chapter 26), the Integrated Survey Process (Chapter 27), and the Special Waste Procedures (Chapter 27).

Changes Affecting Environmental Assessments, ECAD Documentation, and Section 4(f) Evaluations

Effective with the issuance of this memorandum, if District environmental staff is qualified as detailed in Attachment 4, then Districts are no longer required to submit EAs, FONSIs, ECAD documentation (Class of Action Determination Records and Class of Action Determination Documents), and Section 4(f) Evaluations other than combined Section 106/4(f) documents, to BDE for review or approval. The procedures in Section 23-2, Chapter 24, and Section 26-2 of the *BDE Manual* will remain in effect with the proviso that language in those parts requiring submittal of the aforementioned documents to BDE for review or approval may be ignored. (Districts will still need to submit combined Section 106/4(f) documents to BDE for review and coordination pursuant to the Historic Act compliance requirements).

This change in procedures gives the Districts primary accountability for ensuring that their EAs, FONSIs, ECAD documents, and Section 4(f) evaluations conform with the requirements in Part III of the *BDE Manual* and applicable BDE Procedure Memorandums, prior to submitting the documents to FHWA for review and approval.

Changes Affecting Group II CEs

Effective with the issuance of this memorandum, if District environmental staff is qualified as detailed in Attachment 4, then BDE review of the environmental documentation in Phase I Engineering Reports is no longer required prior to design approval. Districts will be accountable for ensuring that the documentation conforms to the requirements discussed in Chapter 12 and Section 23-4 of the *BDE Manual*. In addition, BDE concurrence in Group II CEs will no longer be required. BDE representatives will still participate in District coordination meetings to offer assistance and guidance on environmental issues for CE projects, as appropriate, but their concurrence in Group II CEs will not be necessary. For projects that will involve Federal funding or approvals, FHWA concurrence in Group II CEs will still be required.

Staff Qualifications/Training

With this memorandum, BDE is providing required qualifications for Geometric Engineers and environmental staff (Attachments 3 and 4). Districts shall consider these qualifications in assessing their staffing capabilities and needs for effectively carrying out the accountabilities under these revised procedures.

If the District Engineer deems staff in position or within the appropriate units to have the professional capability of producing acceptable documents and wants them to prepare and approve documents without BDE review, as stated previously in this memorandum, he/she must submit recommendations of qualified staff to the Director of Highways and Deputy Director for Program Development for approval. The District's recommendation shall include the candidate's name, experience, and qualifications on which the basis of recommendation is made. The Director of Highways and Deputy Director for Program Development will approve/deny the recommendations. Headquarters will keep record of the person/persons within the unit, his/her position, and the level of qualifications.

When District staffing changes affect the qualifications of persons in positions exercising engineering or environmental approval authority according to these procedures, the District Engineer must submit the staffing changes to the Director of Highways and the Deputy Director for Program Development for approval to continue the delegation of authority. The submittal must include the name, experience and qualifications of the person(s) in the affected position(s).

Requesting BDE Assistance

Districts will still have the option of requesting BDE review or other assistance in the preparation of the documents detailed in this procedure memorandum on an as-needed basis. For BDE's internal quality control tracking purposes, such requests must be submitted in the form of a memorandum from the District Engineer to the Bureau Chief of BDE. The memorandum will need to describe the assistance being requested and the desired time frame for receipt of the response from BDE. BDE staff will be subject to an internal quality control/quality assurance process that will monitor the assistance requests and responses to ensure quality and timeliness of the responses BDE provides and to identify and implement improvement measures as needed. If there are questions about whether BDE will be able to provide the requested assistance and/or meet the requested time frame, BDE will confer with the District as necessary to address those concerns. If the concerns cannot be satisfactorily resolved, BDE may notify the District that it will be unable to fulfill the assistance request, in which case, it may provide recommendations on other options for obtaining the needed assistance.

Process Reviews

Districts must submit informational copies of all approved documents (Phase I Engineering Reports, geometric designs, and environmental documentation) to BDE upon final approval. BDE will conduct a process review of the first document of each type in each District prepared under the procedures in this memorandum. Annual process reviews of Phase I Engineering Reports will include Group II CE concurrence aspects as a part of these reviews. BDE will provide written findings, guidance, training, revised procedures, or specific recommendations for District action, as appropriate, for addressing any identified deficiencies or concerns. The District Engineer will be required to provide a written reply to the Bureau Chief of BDE indicating corrective actions the District will take in response to the recommendations provided. Thereafter, BDE will conduct annual process reviews of the approved documents to ensure quality compliance. In addition, when approved by the Director, BDE is not precluded from reviewing any portion of the Phase I process at any time, especially when unique features or unusual circumstances are involved.

The projects selected for the process review will depend upon which types of documents, and how many of each has been approved in which Districts in that year. For each annual process review, BDE will provide written findings, guidance, training, revised procedures, or specific recommendations for District action, as appropriate, for addressing any identified deficiencies or concerns. Copies of the process review reports will be submitted to the Director of Highways and the Secretary of Transportation. The District Engineer shall provide a written reply to the Bureau Chief of BDE indicating corrective actions the District will take in response to the recommendations provided.

If a process review determines that a District's geometric designs are unsatisfactory, the District Engineer and the Director of Highways will be notified immediately of the deficiencies. Further, BDE will randomly review the District's designs for the next year. If further shortcomings arise, the District's geometric qualification may be rescinded by the Director of Highways.

FHWA will participate in all process reviews conducted pursuant to these procedures and recommend corrective actions when needed. Best practices identified through the BDE process review will be shared with all Districts.

Engineer of Design and Environment Michael L. Hine

Attachments

Phase I Review and Approval Process (for State Highway Projects)

In table below, **bold type** denotes process changes effective June 30, 2004.

Phase I approval process component	*Process in effect through June 30, 2004*	*Process in effect after June 30, 2004*	*Explanation*
Design Approval of Phase I Reports	BDE is involved for Corridor, Feasibility Study, Design, Combined Design, State Improvement, Project, 3P and SMART Reports. Corridor, Feasibility Studies, Design Reports require concurrence of the Director of Highways, and a briefing of the Secretary and Director of OP&P prior to approval. District Engineer Approval authority includes (50% of all projects): •3R projects EXCEPT: – safety projects, – projects on Interstate routes and other access controlled highways – projects involving conversion of medians or through lanes to 2W2L – projects requiring change to # of through travel lanes •New Right of Way (3acres per mile or more) •Intersection improvements approved by a Certified Geometric Engineer •3P and SMART reports Detour Committee (Central BDE, Construction, Local Roads, & Operations) reviews and approves Detour Reports and TMAs. All projects are discussed at coordination meetings.	• **Delegate review and approval of all projects to District except those involving major new alignment addressed by Corridor, Feasibility Study, & Design Reports or where the DE has requested BDE assistance.** • **Delegate Detour Committee responsibility, including TMA approval, to District, requiring multiple bureau participation.** • Corridor, Feasibility Studies, Design Reports will continue to be reviewed and approved by BDE and require concurrence of the Director of Highways, and a briefing of the Secretary and Director of OP&P prior to approval. • District will continue to submit informational copies of all approved project reports to BDE. • **All projects except SMART & 3P (unless there are design exceptions OR project is a CE II) will be discussed at coordination meetings.** • **Districts will continue to coordinate with the Bridge Office when structures are impacted by a project.** • **BDE and FHWA conduct annual process reviews.**	The discussion of design aspects at coordination meetings will afford the opportunity for BDE to provide feedback on the adequacy of policy interpretation and design analyses. The district will be responsible for ensuring that the phase I report appropriately reflects the input provided. Where the DE does not feel comfortable with the experience level within the district, the DE may request BDE assistance. Annual process reviews will insure quality compliance and corrective action as needed. Coordination with the Bridge Office for structures impacted by projects still needs to be required to insure adequate loading capacity, etc. Continued BDE involvement for projects involving major new alignment addressed by Corridor Reports, Feasibility Study Reports, & Design Reports is recommended due to complexity of issues and the greater potential for legal challenge on these types of actions. The District Detour Committee shall consist of members from the District Bureaus of Program Development, Project Implementation, Local Roads, and Operations. Multi-district detours will be coordinated between district committees. TMAs can be discussed by this group too. This option gives District more accountability.

Phase I approval process component	*Process in effect through June 30, 2004*	*Process in effect after June 30, 2004*	*Explanation*
Design Exceptions	BDE approves specific design exceptions as noted by the Oversight Agreement, mostly at coordination meetings. FHWA approves specific design exceptions as noted by the Oversight Agreement. Formal submittal by the district is required at coordination meetings. Common design exceptions: • Lane & Shoulder Width • Level of Service • Resurfacing thickness • V.C. length, sight distance • Median width & type • Design vehicle, radius returns, intersection approach grades, auxiliary lane channelization lengths • Guardrail length, earth slopes • 3P& SMART-Extra work	• BDE will continue to maintain this responsibility. Design exceptions will continue to be discussed at coordination meetings. **Design exceptions shall require the use of a design exception request and approval form, with attachments. The Director, Deputy Director and the DE will further discuss design exceptions not approved by BDE.** • FHWA will continue to maintain approval authority of design exceptions as noted in the Oversight Agreement. • **Require BDE Design Criteria Checklist in all Phase I Reports and project files.** • **Central database for approved design exceptions**.	Continued BDE involvement is recommended to insure statewide consistency of the design exception process, especially with the implementation of CSS, to minimize liability to the department. Design Criteria Checklist will be required based on the recent FHWA process review. The Central database will allow for tracking of proper justification of design exceptions and may expedite the approval process further.
Geometric Approval	Certified Geometric Engineers approve policy-compliant geometric designs where: •left turn lanes in existing medians except those which are channelized •Right turn lanes constructed in conjunction with federal and state funded 3R projects where no additional ROW is required •Radius returns on all 3R projects where no additional ROW is required. •All geometric improvements on state-only 3R projects on unmarked routes within existing ROW except those with channelized left turn lanes	• **Delegate all geometric designs for:** ➢ **District Geometric Approval if:** – **Approved by Director as Qualified Licensed Professional Engineer/Geometric Engineer** – **District has qualified staff within the Geometrics Unit—PD Engineer or DE must review, approve, and sign)** **(See Attachment 3 for Criteria)** • BDE handles geometric approval by non-qualified Geometric Engineers/Districts. • BDE continue to review and approve: – Access Control Modification – Access Justification Reports • Districts submit informational copies of all approved IDSs to BDE. • **BDE and FHWA conduct annual process reviews.**	Approved qualified Geometric Engineers/Districts approve all geometric designs. Design exceptions to be incorporated into geometric designs will continue to be approved by BDE. This option gives the district more accountability. Because of the difficult technical nature of geometric designs, continued BDE involvement is recommended for those districts without qualified Geometric Engineers. Continued BDE involvement is recommended for Access Control Modification and Access Justification Reports due to the complexity and nuance of the design and issues involved and the need for statewide consistency. Access Control Modification and Access Justification Reports generally do not impact scope, schedule or budget. The District Engineer, the Director, and the Deputy Director of PD have dual responsibility of approval.

Phase I approval process component	*Process in effect through June 30, 2004*	*Process in effect after June 30, 2004*	*Explanation*
Pavement Design Approval	BDE is involved in review and approval of: • Designs >4750 yd² • Special Designs • Waivers	• **Approved Pavement Designs will be required for Design Approval of Phase I reports.** • **Pavement Designs ≥ 10,000 yd², all High Stress Intersection designs, experimental pavements, and any special designs will be reviewed and approved by BDE. Informational copies of district approved designs will be submitted to BDE.** • **BDE will forward pavement design exceptions, special designs, and recommended pavement type determined from the pavement designs submitted to the Pavement Selection Committee to the Director and Deputy Director of PD for final approval.**	The design and selection of pavements touches on very competitive and sensitive interests. Continued involvement of BDE minimizes errors, reduces the potential for perceived bias, and helps to assure uniform and correct statewide application of design procedures. Most districts do not have one person designated as responsible for pavement design. BDE serves as a resource to the districts during development of pavement designs. This helps to streamline the subsequent BDE review and approval process.

Environmental Approval Process

In table below, **bold type** denotes process changes effective June 30, 2004.

Environmental approval process component	*Process in effect through June 30, 2004*	*Process in effect after June 30, 2004*	*Explanation*
EIS	BDE is involved in preparation, review, and approval of all EISs.	• No change in current procedures.	BDE involvement will continue due to complexity of issues and the greater potential for legal challenge on these types of actions.
EA/FONSI/ECAD	BDE is involved in preparation, review, and approval of all EAs, FONSIs, and ECADs.	• **BDE review and approval of EAs/FONSIs/ECAD documents is no longer required with approved qualified District Environment staff.** • BDE will receive informational copy of all final approved EA/FONSI/ECAD documents. • **BDE will implement process review of first approved EA/FONSI/ECAD prepared under new process and will provide guidance and recommendations to address any deficiencies. FHWA will participate in process review. BDE and FHWA will conduct annual process reviews thereafter.** • **District can still request BDE assistance case-by-case, as needed.** • **BDE has developed general required qualifications for district environmental staff.**	This option gives District more accountability while providing process review for evaluation of quality and corrective action, as needed.
Environmental information in Phase I Engineering Reports/Group II CE Concurrence	Reviewed by BDE PD&I. BDE Environment Section does not currently review environmental content in Phase I Engineering Reports but is involved in Group II CE concurrence, generally at coordination meetings.	• **BDE review of environmental information in Phase I reports prior to design approval is no longer required, if qualified staff exists.** • **BDE concurrence on Group II CEs is no longer required.** FHWA concurrence is still required on Federal Group II jobs. • BDE will receive informational copy of all final approved Phase I engineering reports. • **BDE and FHWA will conduct annual process review on Group II CEs.**	This option eliminates need for BDE concurrence in Group II call while providing process review to evaluate operation of process and provide for implementing corrective action, as needed.
Section 4(f) documentation	BDE is involved in review of all 4(f)s as a part of environmental documentation (EIS/EA) and also reviews separate 4(f)s for ECADs and Group II CE projects.	• **With qualified environmental staff, BDE review of 4(f) documentation for EA/ECAD/Group II CE projects is no longer required, except for combined 106/4(f) documents.** • BDE will receive informational copy of all final approved 4(f) documents. • BDE will still review 4(f) documentation for EIS projects and combined 106/4(f) documents.	Since 4(f) documentation generally is integrated with the NEPA documentation, it would still be subject to BDE review for EIS actions but not for EA/ECAD/Group II CEs. The exception would be for combined 106/4(f) documents. The process reviews for EA/ECAD/Group II CE quality assurance also should cover 4(f) documentation for those projects.

Environmental approval process component	*Process in effect through June 30, 2004*	*Process in effect after June 30, 2004*	*Explanation*
Special Environmental Studies (Chapter 26 of *BDE Manual*), Integrated Survey Process (Chapter 27 of *BDE Manual*) and Special Waste Procedures (Chapter 27 of *BDE Manual*)	BDE is involved in the processes for each of these environmental approval components.	No change in current procedures except for Section 4(f) Evaluations (see above).	BDE will continue to provide centralized review and support (e.g., specialized expertise and statewide contract management) for each of these areas, as provided in Chapters 26 and 27 of the *BDE Manual*.

REQUIRED QUALIFICATIONS FOR DISTRICT GEOMETRICS ENGINEER

Requirements:

1. Candidate must have a degree in Civil Engineering, and possess a Civil Engineer V technical classification with the Department, State of Illinois Professional Engineer License implied.

2. Candidate must have demonstrated the professional ability to produce designs that reflect genuine expertise in the field of geometrics as recognized by the District Engineer.

3. Candidate must participate in a one-day orientation in the Bureau of Design & Environment.

4. Candidate must have attended IDOT-approved capacity and geometrics training classes.
    a. Highway Capacity
    b. Fundamentals of Geometrics
    c. Advanced Geometrics

5. The District Engineer must recommend the candidate to the Director of Highways and Deputy Director of Program Development for approval. The Director of Highways and Deputy Director will approve/deny the recommendation.

Recognition:

The District Geometrics Engineer is qualified to approve all geometric designs.

Approval authority of the Geometrics Engineer can be withdrawn by the Director of Highways or Deputy Director of Program Development in the event of failure to exhibit the requisite professional ability. Removal of approval authority would be based on unsatisfactory results of process reviews.

Responsibilities:

Qualified District Geometrics Engineers can approve all geometric designs.

Restrictions:

The approval of Access Justification Reports and changes in access control will be a dual responsibility of the District Engineer and the Deputy Director of Program Development.

In the circumstance where a District has a person or persons in its Geometrics Unit with the cumulative experience and demonstrated ability to produce satisfactory designs but without any person having the ability to become a Geometrics Engineer, the Director of Highways and the Deputy Director of Program Development will consider approving the Geometrics Unit as qualified at the request of the District Engineer. If the unit is approved as having qualified staff, the Program Development Engineer or District Engineer will be responsible for the review, approval, and signing of geometric designs. Staffing changes within the Geometrics Unit may nullify the District's approval authority. To continue to maintain approval authority, the District Engineer shall submit staffing changes within the Geometrics Unit including qualifications to the Director of Highways and the Deputy Director of Program Development for approval.

The Bureau of Design & Environment will review and comment upon geometric designs eligible for District Geometrics Engineer approval, if the District so requests.

6/28/04

REQUIRED QUALIFICATIONS FOR DISTRICT ENVIRONMENTAL STAFF

General

General qualifications for District Environmental staff would include a degree in environmental studies, environmental science or a related field, or in urban planning, and at least three years experience in an environmental field. The requirement for an environmental, urban planning, or related degree can be offset by suitable environmental technical experience and completion of all of the "High" priority training classes in the following list. (For staff that has the requisite degree, completion of all of the "High" priority training classes is strongly recommended.)

Environmental Training

Available environmental training classes and recommended priority for each (High, Medium, or Low) include the following:

- IDOT – Phase I Process Overview/Location & Environmental Studies (High)
- IDOT – COSIM Air Quality Modeling (High)
- IDOT – Noise Training by Statewide Noise Consultant – TNM 2.5 Noise Model (High)

- NHI – NEPA and Transportation Decision Making (High)
- NHI – Public Involvement in the Transportation Decision-making Process (High)
- NHI – Fundamentals of Title VI/Environmental Justice (Medium)
- NHI – Design and Implementation of Erosion and Sediment Control (Medium)
- NHI – The CMAQ Program: Purpose and Practice (Low)
- NHI – Mobile Source Emissions Factor Modeling (Low)

- FHWA Resource Centers – Basic NEPA Project Development and Transportation Decision Making (High)
- FHWA Resource Centers – NEPA, Project Development, and Transportation Decision Making (High)
- FHWA Resource Centers – Section 4(f) Workshop (High)
- FHWA Resource Centers – Highway Traffic Noise Analysis Workshop (High – Districts 1 & 8)
- FHWA Resource Centers – Air Quality Analysis & Workshops (High – Districts 1 & 8)
- FHWA Resource Centers – Endangered Species Act, Section 7 – Federal Consultation (Medium)
- FHWA Resource Centers – Functional Analysis of Wetlands (Medium to Low)
- FHWA Resource Centers – Mobile Source Emission Factor Modeling (Low)
- FHWA Resource Centers – Introduction to Emission Factor and Micro-Scale Dispersion Modeling Course (Low)
- FHWA Resource Centers – Pollution Dispersion Models (Low)
- FHWA Resource Centers – Transportation Air Quality Dispersion Modeling (Low)
- IHPA – Section 106/707 Documentation Workshop

6/28/04

Illinois Department of Transportation
2300 South Dirksen Parkway / Springfield, Illinois / 62764

BDE PROCEDURE MEMORANDUM

NUMBER: 42-04

SUBJECT: Changes in the BDE Manual Guidance on Air Quality and Related Subjects

DATE: August 31, 2004

The information in this memorandum modifies the sections of the BDE Manual 2002 on Alternatives and Air Quality in Chapters 23, 24, and 25 and also revises Section 26-11 on Air Quality Conformity Documentation. Vertical lines in the margins indicate the location of changes in the affected text.

BACKGROUND

On April 30, 2004, the U.S. Environmental Protection Agency (USEPA) published final air quality designations and classifications covering all areas of the United States for the 8-hour ozone national ambient air quality standard. The designations and classifications are effective June 15, 2004. In the northeastern part of Illinois, Cook, DuPage, Kane, Lake, McHenry, and Will Counties, Aux Sable and Goose Lake Townships in Grundy County, and Oswego Township in Kendall County have been designated as moderate nonattainment areas for the 8-hour ozone standard. In the St. Louis area, Jersey, Madison, Monroe, and St. Clair Counties also have been designated as moderate nonattainment areas for the 8-hour standard. A number of the changes in this memorandum are intended to reflect these designations and classifications for the 8-hour ozone standard.

In addition, in May of 2003, the USEPA had determined that the St. Louis nonattainment area, which includes Madison, Monroe, and St. Clair Counties in Illinois, had attained the 1-hour standard. At that time, USEPA also approved Illinois' plan for maintaining the 1-hour ozone standard as a revision to the Illinois State Implementation Plan. The changes addressed in this memorandum also are intended to recognize the maintenance area status of the Illinois portion of the former St. Louis ozone nonattainment area for the 1-hour standard and to reflect that air quality conformity requirements are applicable to maintenance areas. (*Note: USEPA has indicated that it intends to revoke the 1-hour ozone standard in June of 2005. The BDE Manual will be revised to reflect that change when it occurs*.)

The changes in Sections 24-3.06 and 25-3.08 also include the addition of recommended wording for use when it is determined that stand-alone Congestion Management System alternatives will not satisfy a project's

purpose and need. In addition, in Sections 23-1.05(d), 24-3.06, and 25-3.08, we have deleted parenthetical references to carbon monoxide and ozone nonattainment areas to eliminate the need for updating these references when changes occur. We also are revising Sections 24-3.05 and 25-3.07(d) to acknowledge current maintenance areas for the PM_{10} air quality standard and are modifying Sections 23-2.02(e), 24-3.07(e) and 25-3.09(e) to add recommended wording for addressing construction-related particulate matter air quality impacts.

USEPA has indicated that it plans to finalize nonattainment area designations for the $PM_{2.5}$ standard toward the end of 2004. When the $PM_{2.5}$ nonattainment designations are published in the Federal Register, further revisions will be made to the BDE Manual as necessary to reflect any such designations for areas in Illinois.

APPLICABILITY

The following procedures are applicable to State highway projects.

PROCEDURES

Changes Affecting Chapter 23

Section 23-1.05(d) Group II Actions

The third paragraph on page 23-1(9) is revised to read as follows:

For Group II projects that would significantly increase capacity for single occupancy vehicles (i.e., by adding lanes to an existing highway or constructing a new highway) in areas designated as nonattainment for carbon monoxide or ozone, the Phase I Engineering Report must include information on Congestion Management System alternatives. (Lane additions for safety improvements or for elimination of bottlenecks are not considered to be projects that significantly increase capacity for single occupancy vehicles.) See Section 24-3.06 for recommended wording to address this requirement.

Section 23-2.01(d) - Class of Action Determination Document

The “Project Alternatives” paragraph in the Class of Action Determination Document is revised to read as follows:

Project Alternatives: Provide a brief, one-paragraph description for each reasonable alternative and indicate the amount of new right-of-way the alternative would require. Attach a project location map and other exhibits, as appropriate, to explain the nature of the proposed alternative and its setting. The preferred alternative should be indicated, when known. (See Section 22-3.09 for further guidance.) For projects that would significantly increase capacity for single occupancy vehicles (i.e., by adding lanes to an existing

highway or constructing a new highway) in areas designated as nonattainment for carbon monoxide or ozone, the alternatives section must include information on Congestion Management System alternatives. (Lane additions for safety improvements or for elimination of bottlenecks are not considered to be projects that significantly increase capacity for single occupancy vehicles.) See Section 24-3.06 for recommended wording to address this requirement.

Section 23-2.02(e) Air Quality

The "Attainment/Nonattainment Status paragraph on page 23-2(11) is revised to read as follows:

1. Attainment/Nonattainment Status. Determine whether the highway project is located wholly or partly in a portion of the State classified by the US Environmental Protection Agency as a nonattainment area or maintenance area for a transportation-related criteria pollutant. Follow the procedures in Section 26-11 and document the determination in the ECAD Record.

The following is added to this section:

3. Construction-Related Particulate Matter. Include wording such as the following to address construction-related particulate matter air quality impacts:

   Demolition and construction activities can result in short-term increases in fugitive dust and equipment-related particulate emissions in and around the project area. (Equipment-related particulate emissions can be minimized if the equipment is well maintained.) The potential air quality impacts will be short-term, occurring only while demolition and construction work is in progress and local conditions are appropriate.

   The potential for fugitive dust emissions typically is associated with building demolition, ground clearing, site preparation, grading, stockpiling of materials, on-site movement of equipment, and transportation of materials. The potential is greatest during dry periods, periods of intense construction activity, and during high wind conditions.

   The Department's Standard Specifications for Road and Bridge Construction include provisions on dust control. Under these provisions, dust and airborne dirt generated by construction activities will be controlled through dust control procedures or a specific dust control plan, when warranted. The contractor and the Department will meet to review the nature and extent of dust-generating activities and will cooperatively develop specific types of control techniques appropriate to the specific situation. Techniques that may warrant consideration include measures such as minimizing track-out of soil onto nearby publicly-traveled roads, reducing speed on unpaved roads, covering

haul vehicles, and applying chemical dust suppressants or water to exposed surfaces, particularly those on which construction vehicles travel. With the application of appropriate measures to limit dust emissions during construction, this project will not cause any significant, short-term particulate matter air quality impacts.

Changes Affecting Chapter 24

Section 24-3.05 Affected Environment

The "Air Quality" section on pages 24-3(5) to 24-3(7) is revised to read as follows:

3. Air Quality. Include wording similar to the following to address Air Quality aspects of the affected environment for the proposed project:

   The National Ambient Air Quality Standards (NAAQS), established by the U.S. Environmental Protection Agency, set maximum allowable concentration limits for six criteria air pollutants. Areas in which air pollution levels persistently exceed the NAAQS may be designated as "nonattainment." States in which a nonattainment area is located must develop and implement a State Implementation Plan (SIP) containing policies and regulations that will bring about attainment of the NAAQS.

   All areas of Illinois currently are in attainment of the standards for four of the six criteria pollutants: carbon monoxide, nitrogen dioxide, sulfur dioxide, and lead.

   [Revocation of the 1-hour ozone standard is scheduled for June 15, 2005. The first paragraph below should be used until new guidance is issued to reflect revocation of the standard. The remaining paragraphs should continue to be used until subsequently revised or rescinded.]

   For the 1-hour ozone standard, Chicago is classified as a severe nonattainment area and Jersey, Madison, Monroe, and St. Clair Counties are classified as maintenance areas for that standard. The Chicago nonattainment area includes Cook, DuPage, Kane, Lake, McHenry, and Will Counties, Aux Sable and Goose Lake Townships in Grundy County, and Oswego Township in Kendall County.

   For the 8-hour ozone standard, Cook, DuPage, Kane, Lake, McHenry, and Will Counties, as well as Aux Sable and Goose Lake Townships in Grundy County and Oswego Township in Kendall County, have been designated as moderate nonattainment areas. Jersey, Madison, Monroe, and St. Clair Counties in the St. Louis area also have been designated as moderate nonattainment areas for the 8-hour ozone standard.

   The Lake Calumet area and Lyons Township in Cook County have been designated as nonattainment for the particulate matter (PM_{10}) standard. In

addition, Oglesby and several adjacent townships in LaSalle County, and Granite City Township and Nameoki Township in Madison County have been designated as maintenance areas for the PM_{10} standard. The sources of particulate matter that prompted the nonattainment and maintenance classifications are unrelated to transportation. All other areas of Illinois currently are in attainment for the ozone and PM_{10} standards.

[Use the appropriate statement from the following:]

No portion of this project is located within a designated nonattainment area or maintenance area.

or

This project is [totally/partially] located within an area designated as [nonattainment/a maintenance area] for the [indicate criteria pollutant standard(s) involved] standard(s) of the NAAQS.

If a proposed project is located within a designated nonattainment area or maintenance area, include information to describe the numerical standard for the criteria pollutant(s) for which the area is in nonattainment or maintenance status. Also include summary information on the results of recent air quality monitoring in the nonattainment or maintenance area for the criteria pollutant(s) involved in the nonattainment or maintenance classification. Air quality monitoring information can be obtained from the most recent "Illinois Annual Air Quality Report" issued by the Illinois EPA. Also include the following paragraphs concerning the Air Quality Index:

The Air Quality Index (AQI) is the current national standard method for reporting air pollution levels to the general public. The AQI is based on the short-term Federal National Ambient Air Quality Standards (NAAQS), the Federal episode criteria, and the Federal Significant Harm levels for five of the "criteria pollutants," namely, ground-level Ozone (O_3), Sulfur Dioxide (SO_2), Carbon Monoxide (CO), Particulate Matter (PM), and Nitrogen Dioxide (NO_2). The AQI levels have been divided into six categories: "Good" (0-50), "Moderate" (51-100), "Unhealthy for Sensitive Groups" (101-150), "Unhealthy" (151-200), "Very Unhealthy" (201-300), and "Hazardous" (301-500).

The AQI classification of "Unhealthy for Sensitive Groups" occurs on occasion in Illinois under the 8-hour ozone and $PM_{2.5}$ standards. AQI classifications of "Unhealthy" are uncommon and classifications of "Very Unhealthy" are rare in the State. To date, no classifications of "Hazardous" air quality have occurred in Illinois.

Section 24-3.06 Alternatives

The Alternatives discussion on pages 24-3(10) to 24-3(12) is revised to read as follows:

A brief description should be provided for each reasonable alternative under consideration including the "no-action" alternative. Each alternative should be presented at a comparable level of detail and referenced to an exhibit. The principal features of each alternative (e.g., major design aspects such as access control, pavement/shoulder width, and interchanges) should be identified. The discussion should provide only the level of detail necessary for understanding the relationship between the "Purpose and Need" for the project and the proposed alternatives.

Any alternative that was studied and eliminated from further consideration should be described in a brief paragraph, including the reason(s) it is no longer being considered. Supporting information should be quantified as practical so that reviewers can understand the basis for its elimination.

For projects that would significantly increase capacity for single-occupancy vehicles (i.e., by adding lanes to an existing highway or constructing a new highway) in areas designated as nonattainment for carbon monoxide or ozone, the alternatives section must include information on Congestion Management System alternatives. (Lane additions for safety improvements or for elimination of bottlenecks are not considered to be projects that significantly increase capacity for single-occupancy vehicles.) The following paragraphs provide recommended wording for use in addressing this requirement.

Congestion Management System Alternatives

The provisions of 23 CFR 450.320 and 23 CFR 500.105(a) place restrictions on the use of Federal funds for projects in Transportation Management Areas (TMAs) designated as nonattainment for carbon monoxide and/or ozone. In these areas, Federal funds may not be programmed for any project that will significantly increase capacity for single-occupancy vehicles (SOVs) unless the project is a component of a Congestion Management System (CMS). The CMS is required to provide an appropriate analysis of alternatives to the proposal for adding SOV capacity, including all reasonable congestion management strategies. If the analysis demonstrates that other alternatives and/or congestion management strategies cannot fully satisfy the need for additional capacity and that, therefore, the additional SOV capacity is warranted, the CMS must identify all reasonable strategies that will maintain the functional integrity of the additional lanes. All identified reasonable strategies must be incorporated into the project.

[For projects in the Chicago metro area]

Individual projects involving addition of SOV capacity were evaluated, selected, and prioritized in the course of developing the Fiscal Year [insert appropriate years] Transportation Improvement Program (TIP) and the long-range [insert appropriate year] Regional Transportation Plan (RTP) for Northeastern Illinois. The Northeastern Illinois CMS is documented via the following materials which are available through the Chicago Area Transportation Study (CATS):

- *Congestion Management System for Northeastern Illinois, Technical Supplement, [month, year].*

- *Congestion Management Handbook, [month, year].*

- *Congestion Management System for Northeastern Illinois, [insert appropriate year] Status Report.*

As indicated in the documents listed above, the development process for the TIP and Regional Transportation Plan constitutes the CMS for Northeastern Illinois. This process documents warranted projects for adding SOV capacity and, as applicable, also documents that regional and/or project-specific alternatives such as Transportation Demand Management measures, High Occupancy Vehicle measures, Transit Capital Improvements, Congestion Pricing, Growth Management, and Incident Management would not obviate the need for adding SOV capacity. Planned projects resulting from the CMS are documented in the CMS status report referenced above. [Include the following sentence, when applicable.] For this project, it has been determined that stand-alone CMS alternatives will not satisfy the project purpose and need and, therefore, this undertaking is a warranted project for adding SOV capacity.

Reasonable project-specific CMS strategies, including Traffic Operational Improvements, Transit Operational Improvements, Non-motorized modes/ measures (Pedestrian/Bicycle), Intelligent Transportation System (ITS), and Access Management, have been incorporated into this project to the extent practical. Specific strategies incorporated include [list the strategies (as described in the CMS Handbook) such as adding turning lanes, modernizing signals, signal interconnect, ITS (adding dynamic message signs, highway advisory radio, fiber optic, etc.), sidewalk/bicycle accommodations, access consolidation, and/or barrier median to control access, etc.]. [Add the following, if applicable:] With respect to Transit Operational Improvements, coordination occurred with [PACE/Metra/CTA]. Based on this coordination the following transit improvements were included in the project: [briefly describe any included transit projects and reference pertinent correspondence].

As documented in the above information, this project results from the CMS for Northeastern Illinois as a warranted project for adding SOV capacity and all

reasonable congestion management strategies have been incorporated into the project to sustain its effectiveness.

Section 24-3.07(e) Air Quality

The air quality discussion on pages 24-3(18) to 24-3(20) is revised to include the following paragraphs:

3. Construction-Related Particulate Matter. Include wording such as the following to address construction-related particulate matter air quality impacts:

   Demolition and construction activities can result in short-term increases in fugitive dust and equipment-related particulate emissions in and around the project area. (Equipment-related particulate emissions can be minimized if the equipment is well maintained.) The potential air quality impacts will be short-term, occurring only while demolition and construction work is in progress and local conditions are appropriate.

   The potential for fugitive dust emissions typically is associated with building demolition, ground clearing, site preparation, grading, stockpiling of materials, on-site movement of equipment, and transportation of materials. The potential is greatest during dry periods, periods of intense construction activity, and during high wind conditions.

   The Department's Standard Specifications for Road and Bridge Construction include provisions on dust control. Under these provisions, dust and airborne dirt generated by construction activities will be controlled through dust control procedures or a specific dust control plan, when warranted. The contractor and the Department will meet to review the nature and extent of dust-generating activities and will cooperatively develop specific types of control techniques appropriate to the specific situation. Techniques that may warrant consideration include measures such as minimizing track-out of soil onto nearby publicly-traveled roads, reducing speed on unpaved roads, covering haul vehicles, and applying chemical dust suppressants or water to exposed surfaces, particularly those on which construction vehicles travel. With the application of appropriate measures to limit dust emissions during construction, this project will not cause any significant, short-term particulate matter air quality impacts.

Changes Affecting Chapter 25

Section 25-3.07(d) Air Quality

The Air Quality discussion on pages 25-3(7) to 25-3(9) is revised to read as follows:

Include wording similar to the following to address Air Quality aspects of the affected environment for the proposed project:

The National Ambient Air Quality Standards (NAAQS), established by the U.S. Environmental Protection Agency, set maximum allowable concentration limits for six criteria air pollutants. Areas in which air pollution levels persistently exceed the NAAQS may be designated as "nonattainment." States in which a nonattainment area is located must develop and implement a State Implementation Plan (SIP) containing policies and regulations that will bring about attainment of the NAAQS.

All areas of Illinois currently are in attainment of the standards for four of the six criteria pollutants: carbon monoxide, nitrogen dioxide, sulfur dioxide, and lead.

[Revocation of the 1-hour ozone standard is scheduled for June 15, 2005. The first paragraph below should be used until new guidance is issued to reflect revocation of the standard. The remaining paragraphs should continue to be used until subsequently revised or rescinded.]

For the 1-hour ozone standard, Chicago is classified as a severe nonattainment area and Jersey, Madison, Monroe, and St. Clair Counties are classified as maintenance areas for that standard. The Chicago nonattainment area includes Cook, DuPage, Kane, Lake, McHenry, and Will Counties, Aux Sable and Goose Lake Townships in Grundy County, and Oswego Township in Kendall County.

For the 8-hour ozone standard, Cook, DuPage, Kane, Lake, McHenry, and Will Counties, as well as Aux Sable and Goose Lake Townships in Grundy County and Oswego Township in Kendall County, have been designated as moderate nonattainment areas. Jersey, Madison, Monroe, and St. Clair Counties in the St. Louis area also have been designated as moderate nonattainment areas for the 8-hour ozone standard.

The Lake Calumet area and Lyons Township in Cook County have been designated as nonattainment for the particulate matter (PM_{10}) standard. In addition, Oglesby and several adjacent townships in LaSalle County, and Granite City Township and Nameoki Township in Madison County have been designated as maintenance areas for the PM_{10} standard. The sources of particulate matter that prompted the nonattainment and maintenance classifications are unrelated to transportation. All other areas of Illinois currently are in attainment for the ozone and PM_{10} standards.

[Use the appropriate statement from the following:]

No portion of this project is located within a designated nonattainment area or maintenance area.

or

This project is [totally/partially] located within an area designated as [nonattainment/a maintenance area] for the [indicate criteria pollutant standard(s) involved] standard(s) of the NAAQS.

If a proposed project is located within a designated nonattainment area or maintenance area, include information to describe the numerical standard for the criteria pollutant(s) for which the area is in nonattainment or maintenance status. Also include summary information on the results of recent air quality monitoring in the project vicinity for the criteria pollutant(s) involved in the nonattainment or maintenance classification. Air quality monitoring information can be obtained from the most recent "Illinois Annual Air Quality Report" issued by the Illinois EPA. Also include the following paragraphs concerning the Air Quality Index:

The Air Quality Index (AQI), is the current national standard method for reporting air pollution levels to the general public. The AQI is based on the short-term Federal National Ambient Air Quality Standards (NAAQS), the Federal episode criteria, and the Federal Significant Harm levels for five of the "criteria pollutants," namely, ground-level Ozone (O_3), Sulfur Dioxide (SO_2), Carbon Monoxide (CO), Particulate Matter (PM), and Nitrogen Dioxide (NO_2). The AQI levels have been divided into six categories: "Good" (0-50), "Moderate" (51-100), "Unhealthy for Sensitive Groups" (101-150), "Unhealthy" (151-200), "Very Unhealthy" (201-300), and "Hazardous" (301-500).

The AQI classification of "Unhealthy for Sensitive Groups" occurs on occasion in Illinois under the 8-hour ozone and $PM_{2.5}$ standards. AQI classifications of "Unhealthy" are uncommon and classifications of "Very Unhealthy" are rare in the State. To date, no classifications of "Hazardous" air quality have occurred in Illinois.

<u>Section 25-3.08 Alternatives</u>

The Alternatives discussion on pages 25-3(11) to 25-3(13) is revised to read as follows:

In addition to the information in the cited references, the following guidance applies to this part of the EIS.

For projects that would significantly increase capacity for single-occupancy vehicles (i.e., by adding lanes to an existing highway or constructing a new

highway) in areas designated as nonattainment for carbon monoxide or ozone, the alternatives section must include information on Congestion Management System alternatives. (Lane additions for safety improvements or for elimination of bottlenecks are not considered to be projects that significantly increase capacity for single-occupancy vehicles.) The following paragraphs provide recommended wording for use in addressing this requirement:

Congestion Management System Alternatives

The provisions of 23 CFR 450.320 and 23 CFR 500.105(a) place restrictions on the use of Federal funds for projects in Transportation Management Areas (TMAs) designated as nonattainment for carbon monoxide and/or ozone. In these areas, Federal funds may not be programmed for any project that will significantly increase capacity for single-occupancy vehicles (SOVs) unless the project is a component of a Congestion Management System (CMS). The CMS is required to provide an appropriate analysis of alternatives to the proposal for adding SOV capacity, including all reasonable congestion management strategies. If the analysis demonstrates that other alternatives and/or congestion management strategies cannot fully satisfy the need for additional capacity and that, therefore, the additional SOV capacity is warranted, the CMS must identify all reasonable strategies that will maintain the functional integrity of the additional lanes. All identified reasonable strategies must be incorporated into the project.

[For projects in the Chicago metro area]

Individual projects involving addition of SOV capacity were evaluated, selected, and prioritized in the course of developing the Fiscal Year [insert appropriate years] Transportation Improvement Program (TIP) and the long-range [insert appropriate year] Regional Transportation Plan (RTP) for Northeastern Illinois. The Northeastern Illinois CMS is documented via the following materials which are available through the Chicago Area Transportation Study (CATS):

- *Congestion Management System for Northeastern Illinois, Technical Supplement, [month, year].*
- *Congestion Management Handbook, [month, year].*
- *Congestion Management System for Northeastern Illinois, [insert appropriate year] Status Report.*

As indicated in the documents listed above, the development process for the TIP and Regional Transportation Plan constitutes the CMS for Northeastern Illinois. This process documents warranted projects for adding SOV capacity and, as applicable, also documents that regional and/or project-specific alternatives such as Transportation Demand Management measures, High

Occupancy Vehicle measures, Transit Capital Improvements, Congestion Pricing, Growth Management, and Incident Management would not obviate the need for adding SOV capacity. Planned projects resulting from the CMS are documented in the CMS status report referenced above. [Include the following sentence, when applicable.] For this project, it has been determined that stand-alone CMS alternatives will not satisfy the project purpose and need and, therefore, this undertaking is a warranted project for adding SOV capacity.

Reasonable project-specific CMS strategies, including Traffic Operational Improvements, Transit Operational Improvements, Non-motorized modes/ measures (Pedestrian/Bicycle), Intelligent Transportation System (ITS), and Access Management, have been incorporated into this project to the extent practical. Specific strategies incorporated include [list the strategies (as described in the CMS Handbook) such as adding turning lanes, modernizing signals, signal interconnect, ITS (adding dynamic message signs, highway advisory radio, fiber optic, etc.), sidewalk/bicycle accommodations, access consolidation, and/or barrier median to control access, etc.]. [Add the following, if applicable:] With respect to Transit Operational Improvements, coordination occurred with [PACE/Metra/CTA]. Based on this coordination the following transit improvements were included in the project: [briefly describe any included transit projects and reference pertinent correspondence].

As documented in the above information, this project results from the CMS for Northeastern Illinois as a warranted project for adding SOV capacity and all reasonable congestion management strategies have been incorporated into the project to sustain its effectiveness.

Section 25-3.09(e) Air Quality

The air quality discussion on pages 25-3(24) and 25-3(25) is revised to include the following paragraphs:

3. Construction-Related Particulate Matter. Include wording such as the following to address construction-related particulate matter air quality impacts:

   Demolition and construction activities can result in short-term increases in fugitive dust and equipment-related particulate emissions in and around the project area. (Equipment-related particulate emissions are usually insignificant when equipment is well maintained.) The potential air quality impacts will be short-term, occurring only while demolition and construction work is in progress and local conditions are appropriate.

   The potential for fugitive dust emissions typically is associated with building demolition, ground clearing, site preparation, grading, stockpiling of materials, on-site movement of equipment, and

transportation of materials. The potential is greatest during dry periods, periods of intense construction activity, and during high wind conditions.

The Department's Standard Specifications for Road and Bridge Construction include provisions on dust control. Under these provisions, dust and airborne dirt generated by construction activities will be controlled through dust control procedures or a specific dust control plan, when warranted. The contractor and the Department will meet to review the nature and extent of dust-generating activities and will cooperatively develop specific types of control techniques appropriate to the specific situation. Techniques that may warrant consideration include measures such as minimizing track-out of soil onto nearby publicly-traveled roads, reducing speed on unpaved roads, covering haul vehicles, and applying chemical dust suppressants or water to exposed surfaces, particularly those on which construction vehicles travel. With the application of appropriate measures to limit dust emissions during construction, this project will not cause any significant, short-term particulate matter air quality impacts.

Changes Affecting Chapter 26

Section 26-11 Air Quality Conformity Documentation

The following replaces the discussion of Air Quality Conformity Documentation on pages 26-11(1) through 26-11(8):

26-11.01 Background

Section 176(c)(4) of the Clean Air Act Amendments of 1990 requires that transportation plans, programs, and projects which are funded or approved under Title 23 USC must be determined to conform with State or Federal air implementation plans. Such implementation plans describe how air quality standards will be achieved in those areas of a State in which standards are being exceeded and how they will be maintained in areas that have been re-designated from nonattainment to maintenance status. Conformity to an implementation plan is defined in the Clean Air Act as conformity to an implementation plan's purpose of eliminating or reducing the severity and number of violations of the national ambient air quality standards and achieving expeditious attainment of such standards. Federal activities may not cause or contribute to new violations of air quality standards, exacerbate existing violations, or interfere with the timely reduction of emissions as reflected in the State implementation plan. The implementing regulations for determining conformity of transportation projects (40 CFR Part 93, "Criteria and Procedures for Determining Conformity to State or Federal Implementation Plans of Transportation Plans, Programs, and Projects Funded or Approved Under Title 23 USC or the Federal Transit Act") also

impose requirements upon "regionally significant projects"* in nonattainment areas and maintenance areas** regardless of whether those projects involve Federal funding or approvals.

Transportation-related criteria pollutants include Ozone (O_3), Carbon Monoxide (CO), Nitrogen Dioxide (NO_2), particles with an aerodynamic diameter less than or equal to a nominal 10 microns (PM_{10}), and particles with an aerodynamic diameter less than or equal to 2.5 microns ($PM_{2.5}$). Precursors of these pollutants also are considered in regional air quality analyses for nonattainment areas. The primary precursors include volatile organic compounds (VOC) and oxides of nitrogen (NO_x) in ozone areas; NO_x in NO_2 areas; and VOC and NO_x in PM_{10} and $PM_{2.5}$ areas.

BDE will disseminate information to all districts regarding the location, boundaries, and applicable criteria pollutant(s) for nonattainment areas and maintenance areas in Illinois. Updates to this information will be issued as changes are published in the *Federal Register*.

26-11.02 <u>Applicability</u>

The following procedures are applicable to all State highway projects funded or approved by the Federal Highway Administration under Title 23 USC and to "regionally significant projects" in nonattainment areas and maintenance areas, regardless of whether such projects are Federally funded or approved under Title 23.

---

* *"Regionally significant projects" means transportation projects (other than exempted projects) that are on facilities which serve regional transportation needs (such as access to and from the area outside of the region, major activity centers in the region, major planned developments such as new retail malls, sports complexes, etc., or transportation terminals as well as most terminals themselves) and would normally be included in the modeling of a metropolitan area's transportation network, including at a minimum all principal arterial highways and all fixed guideway transit facilities that offer an alternative to regional highway travel.*

** *"Maintenance area" means any geographic region of the United States previously designated nonattainment pursuant to the Clean Air Act Amendments of 1990 and subsequently re-designated to attainment subject to the requirement to develop a maintenance plan under section 175A of the Clean Air Act, as amended.*

26-11.03 Procedures

26-11.03(a) Determining Project Involvement with Designated Nonattainment Areas or Maintenance Areas

In the preparation of environmental documentation for projects subject to these procedures, districts should review the most recent information from BDE regarding those areas of Illinois that have been designated as nonattainment for one or more of the criteria pollutants or that have been designated as maintenance areas. If the proposed improvement is partially or completely within a designated nonattainment area or maintenance area it will be subject to the conformity requirements unless the type of work involved is exempted (refer to the following section). The USEPA rules do not currently require conformity determinations for projects outside of nonattainment or maintenance areas (i.e., within attainment areas).

26-11.03(b) Determining Whether Project is Exempt from Conformity Requirements

The USEPA conformity rules for transportation projects exempt the project types listed below from the requirement for a conformity determination. The determination of whether a particular action is exempt from the conformity requirement, in most cases, is made during the development of the Transportation Improvement Program (TIP) prior to the initiation of Phase I planning. Note that a particular project of a type listed is not exempt if the Metropolitan Planning Organization, in consultation with other agencies, the EPA, and FHWA, concurs that it is has potentially adverse emissions impacts for any reason.

Exempt Projects:

1. *Safety*

- Railroad/highway crossing.
- Hazard elimination program.
- Safer non-Federal-aid system roads.
- Shoulder improvements.
- Increasing sight distance.
- Safety improvement program.
- Traffic control devices and operating assistance other than signalization projects.
- Railroad/highway crossing warning devices.
- Guardrails, median barriers, crash cushions.
- Pavement resurfacing and/or rehabilitation.
- Pavement marking demonstration.
- Emergency relief.
- Fencing.
- Skid treatments.

- Safety roadside rest areas.
- Adding medians.
- Truck climbing lanes outside urbanized areas.
- Lighting improvements.
- Widening narrow pavements or reconstructing bridges (no additional travel lanes).
- Emergency truck pullovers.

2. *Air Quality*

- Bicycle and pedestrian facilities.

3. *Other*

- Specific activities which do not involve or lead directly to construction, such as:

  + Planning and technical studies.
  + Federal-aid systems revisions.
  + Planning activities conducted pursuant to 23 and 49 U.S.C.

- Engineering to assess social, economic, and environmental effects of a proposed action or alternatives to that action.

- Noise attenuation.

- Advance land acquisitions (23 CFR Part 712 or 23 CFR Part 771)

- Acquisition of scenic easements.

- Plantings, landscaping, etc.

- Sign removal.

- Directional and informational signs.

- Transportation enhancement activities (except rehabilitation and operation of historic transportation buildings, structures, or facilities).

- Repair of damage caused by natural disasters, civil unrest, or terrorist acts, except projects involving substantial functional, locational, or capacity changes.

4. *Exempt from Regional Emissions Analyses*

- Intersection channelization projects.
- Intersection signalization projects at individual intersections.

- Interchange reconfiguration projects.
- Changes in vertical and horizontal alignments.
- Truck size and weight inspection stations.

26-11.03(c) Determining Highway Project Conformity

To determine conformity of non-exempted projects within designated nonattainment areas or maintenance areas, the district must ascertain whether the project is from a conforming transportation plan and a conforming Transportation Improvement Program (TIP) and satisfies other applicable conditions as specified in the conformity rules. As used in this procedure, the term "transportation plan" refers to the official intermodal metropolitan transportation plan that is developed through the metropolitan planning process for the metropolitan planning area pursuant to 23 CFR Part 450. The term "Transportation Improvement Program" refers to the staged, multi-year, intermodal program of transportation projects covering a metropolitan planning area which is consistent with the metropolitan transportation plan and is developed pursuant to 23 CFR Part 450. The district should contact the Office of Planning and Programming if confirmation or clarification is needed regarding whether a specific project was in a conforming plan and TIP.

The project conforms with the requirements of the Clean Air Act if the district confirms that the following statements are applicable to the action:

- The project was included in a conforming transportation plan and TIP.

- The project design concept and scope have not changed significantly from what was reflected in the conformity analysis for the plan and TIP.

- The project will comply with PM_{10} control measures in the State implementation plan.

(Other criteria and procedures will apply for determining conformity of projects within CO or PM_{10} nonattainment areas. Districts should contact BDE for further guidance regarding such projects as the need arises.)

To determine conformity for projects in nonattainment areas or maintenance areas outside of locations served by Metropolitan Planning Organizations, the district should contact BDE and the Office of Planning and Programming to initiate a regional emissions analysis. The purpose of this analysis is to demonstrate that the proposed project will not cause nor contribute to any new localized violations nor increase the frequency or severity of any existing violations of the national ambient air quality standards for the transportation-related criteria pollutant(s). The project will be determined to conform with the requirements of the 1990 Clean Air Act Amendments upon the concurrence of FHWA in the regional emissions analysis supporting this finding.

Projects must be found to conform before they are adopted, accepted, approved, or funded. Conformity must be re-determined if none of the following major steps has occurred within three years of the conformity determination — NEPA process completion; start of final design; acquisition of a significant portion of the right-of-way; or approval of the plans, specifications, and estimates. A new conformity determination also will be required if there is a significant change in project design concept and scope or if a supplemental environmental document is initiated for air quality purposes.

Regionally significant projects that do not involve Federal approvals or funding from FHWA do not require conformity determinations. However, under the conformity rules, IDOT may not approve these projects unless there is a currently conforming transportation plan and TIP for the area in which the project is located and the project satisfies specific conditions regarding its potential effect on regional air quality. The district should contact BDE relative to regionally significant non-Federal projects in nonattainment areas or maintenance areas for guidance regarding these special conditions.

26-11.03(d) Documentation

The environmental documentation for all projects subject to these procedures must include a statement regarding the status of the project with regard to the Clean Air Act conformity regulations (i.e., indicating that the project is outside of any designated nonattainment area or maintenance area, that the project is of a type exempted from conformity requirements, or that the project has been determined to satisfy the conformity regulations). The following paragraphs indicate the different statements that should be used for this documentation.

Note: For those statements that include references to dates (e.g., for Transportation Improvement Programs and plans), the district should enter the dates in effect at the time of the conformity determination. BDE should be contacted for guidance if questions arise regarding particular projects.

1. **Projects outside of nonattainment areas or maintenance areas.** For projects which the district determines are completely outside of any designated nonattainment areas or maintenance areas, the following statement should be included in the project environmental documentation:

   No portion of this project is within a designated nonattainment area or maintenance area for any of the air pollutants for which the USEPA has established standards. Accordingly, a conformity determination under 40 CFR Part 93 ("Criteria and Procedures for Determining Conformity to State or Federal Implementation Plans of Transportation Plans, Programs, and Projects Funded or Approved Under Title 23 USC or the Federal Transit Act") is not required.

2. **Exempt projects.** For actions which the district determines are located within a designated nonattainment area or maintenance area but which are covered by the exempt projects lists in Section 26-11.03(b) (which includes project types exempt from conformity and those exempt from regional emissions analyses), the following statement should be included in the project environmental documentation:

   This project is located within a designated [nonattainment area/maintenance area] but is a project type which the USEPA has designated to be exempt from inclusion in the regional emissions analyses of transportation plans and Transportation Improvement Programs for purposes of determining conformity with the State Implementation Plan (SIP). This designation is based on USEPA's determination that the nature of the project is such that it would not affect the outcome of a regional emissions analysis.

3. **Projects within a portion of a nonattainment area or maintenance area for which the Chicago Area Transportation Study (CATS) is the MPO.** The following paragraphs should be used to document the necessary findings for conformity of projects within a nonattainment area or maintenance area for which CATS is the MPO:

   This project is included in the FY [indicate years] Transportation Improvement Program (TIP) endorsed by the Policy Committee of the Chicago Area Transportation Study (CATS), the Metropolitan Planning Organization (MPO) for the region in which the project is located. Projects in the TIP are considered to be consistent with the [indicate year] regional transportation plan endorsed by CATS.

   On [indicate date], the Federal Highway Administration (FHWA) and the Federal Transit Administration (FTA) determined that the [indicate year] regional transportation plan conforms with the State Implementation Plan (SIP) and the transportation-related requirements of the 1990 Clean Air Act Amendments. On [indicate date], the FHWA and the FTA determined that the TIP also conforms with the SIP and the Clean Air Act Amendments. These findings were in accordance with 40 CFR Part 93, "Criteria and Procedures for Determining Conformity to State or Federal Implementation Plans of Transportation Plans, Programs, and Projects Funded or Approved Under Title 23 USC or the Federal Transit Act."

   The project's design concept and scope are consistent with the project information used for the TIP conformity analysis. Therefore, this project conforms to the existing State Implementation Plan and the transportation-related requirements of the 1990 Clean Air Act Amendments.

4. **Projects within a nonattainment area or maintenance area served by a Metropolitan Planning Organization other than CATS.** The following paragraphs should be used to document the necessary findings for conformity of projects within a nonattainment area or maintenance area served by a Metropolitan Planning Organization other than CATS:

   This project is included in the Long-Range Transportation Plan and in the [indicate years] Transportation Improvement Program (TIP) endorsed by [indicate name of MPO], the Metropolitan Planning Organization (MPO) for the region in which the project is located.

   On [indicate date] the Federal Highway Administration (FHWA) and the Federal Transit Administration (FTA) determined that the Long-Range Transportation Plan conforms with the transportation-related provisions of the Clean Air Act Amendments of 1990. The FHWA and the FTA determined on [indicate date] that the TIP conforms to the Clean Air Act Amendments. These findings were in accordance with 40 CFR Part 93, "Criteria and Procedures for Determining Conformity to State or Federal Implementation Plans of Transportation Plans, Programs, and projects Funded or Approved Under Title 23 USC or the Federal Transit Act."

   The project's design concept and scope are consistent with the project information used for the TIP conformity analysis. Therefore, this project conforms to the existing State Implementation Plan and the transportation-related requirements of the 1990 Clean Air Act Amendments.

5. **Projects within a nonattainment area or maintenance area not served by a Metropolitan Planning Organization.** For projects which the district determines will be located within a nonattainment area or maintenance area outside an area served by a Metropolitan Planning Organization, the following paragraphs should be used to document the necessary analysis and finding by the FHWA for conformity:

   This project is located within an area that the USEPA has designated as [nonattainment/a maintenance area] in relation to the national ambient air quality standards for [insert name(s) of applicable criteria pollutant(s)]. The project is outside of an area served by a Metropolitan Planning Organization (MPO).

   The Federal Highway Administration (FHWA) has reviewed the results of a regional emissions analysis prepared by the Illinois Department of Transportation that includes the proposed project. Based on the results of this analysis, the FHWA has determined that the project will not cause or contribute to any new localized violations of the standard[s] for [insert name(s) of applicable criteria pollutant(s)] nor increase the frequency or severity of any existing violations of the [insert name(s) of applicable criteria pollutant(s)] standard[s]. Therefore, this project

conforms to the transportation-related requirements of the 1990 Clean Air Act Amendments.

6. **"Regionally significant" non-Federal projects within a nonattainment area or maintenance area.** For "regionally significant" projects located in a nonattainment area or maintenance area that do not involve funding or approvals from FHWA, the following paragraphs should be used to document compliance with the conformity regulations:

   This project is located within an area that the USEPA has designated as [nonattainment/a maintenance area] in relation to the national ambient air quality standards for [insert name(s) of applicable criteria pollutant(s)]. The project does not involve approvals or funding from the Federal Highway Administration but has been determined to be "regionally significant" under 40 CFR Part 93 "Criteria and Procedures for Determining Conformity to State or Federal Implementation Plans of Transportation Plans, Programs, and projects Funded or Approved Under Title 23 USC or the Federal Transit Act."

   The Illinois Department of Transportation has confirmed that there is a currently conforming transportation plan and transportation improvement program and has determined that the plan, transportation improvement program, and project are consistent with 40 CFR Part 93.129, "Requirements for adoption or approval of projects by other recipients of funds designated under Title 23 USC or the Federal Transit Act."

Engineer of Design and Environment Michael Hine

Illinois Department of Transportation
2300 South Dirksen Parkway / Springfield, Illinois / 62764

BDE PROCEDURE MEMORANDUM

NUMBER: 43-04

SUBJECT: Coordination with IDNR on Natural Resource Issues

DATE: October 8, 2004

This memorandum supersedes the information in Section 22-5.05 of the BDE Manual 2002.

The accompanying attachment contains revised information for Section 22-5.05 of the BDE Manual. The changes are the result of an updated *Natural Resource Review and Coordination Agreement* that was executed by this Department and the Illinois Department of Natural Resources in July of this year. The updated interagency Agreement was the product of negotiations between the two agencies to decide how screening of projects against the Natural Heritage Database, previously an IDNR function, could be handled by IDOT to help streamline the coordination process. In accordance with the Agreement, BDE will now handle the screening and will provide the results to the Districts with a copy to IDNR for action as described in the accompanying attachment.

The IDOT/IDNR Agreement also was modified to clarify the basis for closing project consultation on threatened and endangered species impacts where IDNR has made a recommendation for obtaining an incidental taking authorization (see BDE Procedure Memorandum 31-03). Those changes also are reflected in the attachment.

The information in the attachment is effective immediately.

Engineer of Design and Environment Michael L. Heine

Attachment

22-5.05 Coordination with IDNR on Natural Resource Issues

References: Section 26-3 *Section 6(f) Land Conversion Request*
Section 26-4 *OSLAD Land Conversion Request*
Section 26-9.06 *State Requirements (for Threatened and Endangered Species)*

22-5.05(a) Interagency Agreement

Coordination with the Illinois Department of Natural Resources (IDNR) for highway projects is governed by a *Natural Resource Review and Coordination Agreement* between IDOT and IDNR. The initial Agreement was signed by both agencies in January of 1996 and an amended version was executed in July of 2004. The Agreement establishes a framework for early coordination on natural resource issues and for follow-up coordination as necessary for compliance with statutory and regulatory requirements under the jurisdiction of IDNR. The following sections reflect the key provisions of the Agreement.

22-5.05(b) General Principles of Coordination

Project coordination with IDNR will be conducted in accordance with the principles discussed in the following paragraphs.

All official comments, recommendations, and responses by either IDNR or IDOT will be in writing, except in emergency situations which are defined in IDNR administrative rules (17 Ill. Adm. Code 1075). Verbal responses may be allowed for urgent situations, with a written response due within five days following the action taken.

The IDNR Transportation Program Manager and the IDOT BDE will be the primary contacts for coordination of IDOT project information. The IDNR Transportation Program Manager is responsible for ensuring that appropriate offices within IDNR receive IDOT project information for review in response to identified resource involvements. The IDNR Transportation Program Manager also will be responsible for notifying IDOT of any additional information needed for IDNR to complete its review. The IDOT contact will be responsible for supplying IDNR the information necessary to complete the review of a project, including the initial information for IDNR review of the results of screening against the Natural Heritage Database by BDE (see Section 22-5.05(c)) and additional information for projects that have resource involvements requiring submittal to IDNR for a more thorough review.

The review conducted by IDNR is valid for three years from the close of the response period for the most recent screening results [22-5.05(c)1.D.], or, if resources are involved, from the date upon which IDOT and IDNR conclude formal coordination necessary to address resources covered by the IDOT/IDNR coordination Agreement. If the project has not commenced (i.e., been advertised for bid letting) in that time, it must be re-screened by BDE and resubmitted for IDNR review of the screening results. Districts must submit a memorandum to BDE to request

re-screening of a project. A copy of the Environmental Survey Request (ESR) and accompanying project location information that was returned to the District following initial screening, or for projects with resource involvements, a copy of the Agency Action Report that was coordinated with IDNR, should be submitted with the memorandum.

(*Districts will be responsible for ensuring that valid screening results and, for projects with resource involvements, a valid IDNR response providing closure on applicable resource issues, are in effect at key decision points up to when the project is advertised for bid letting. See Section 22-5.05(c)4 Follow-up Coordination and Reporting.*)

22-5.05(c) Review Process

1. Screening Against the Natural Heritage Database

For projects affecting only agricultural crop land or urban properties developed for residential, commercial, or industrial purposes, screening against the information in the Natural Heritage Database will not be necessary unless it is evident from information known to IDOT that a threatened or endangered species, Illinois Natural Areas Inventory (INAI) site, or Illinois Nature Preserve may be adversely affected. For all other projects, BDE shall use the IDNR's Natural Resource Review Tool (NRRT) to screen the actions against the Natural Heritage Database in accordance with the following terms:

A. For purposes of screening projects against the Natural Heritage Database, BDE will use the most recent information in the data layers for endangered and threatened species locations, INAI sites, and Illinois Nature Preserves.

B. BDE will examine each of the three aforementioned data layers for the project "footprint", the area that would be occupied by the physical components of the project when constructed, and an area at least one mile laterally beyond the project footprint. (When a project may affect areas beyond the one mile distance, such as in downstream aquatic resources, BDE will check the data layers for an area sufficient to address the extent of the anticipated impacts). This examination will evaluate whether any known locations of threatened or endangered species, INAI sites, or Illinois Nature Preserves are within the area of the project's potential environmental effects such that they would require consultation pursuant to the Illinois Endangered Species Protection Act or the Illinois Natural Areas Preservation Act.

C. For all projects screened against the Natural Heritage Database, BDE will transmit an electronic copy of the results to the IDNR Division of Resource Review and Coordination. The electronic results will include a link to the NRRT that will show the limits of the area examined and the data layers used for the screening. The following will apply to the transmittals from BDE:

(1) If screening identifies no endangered or threatened species, INAI sites, or nature preserves within the area examined, BDE will include with the transmittal of the results a recommendation that further consultation should not be necessary.

(2) If screening identifies one or more threatened or endangered species, INAI sites, or nature preserves within the area examined, BDE will include with the transmittal of the results an Agency Action Report (AAR). BDE also may include an evaluation of the extent to which the project may affect the identified resources and an indication of whether or not field studies and/or further consultation are recommended.

D. If screening identified no endangered or threatened species, INAI sites, or nature preserves within the area examined, IDNR will have 10 working days from the receipt of screening results to advise BDE of any differences in screening findings or the associated recommendations based on its review. If IDNR does not respond within the 10-day period, that will signify IDNR agreement with the findings and recommendations provided by BDE.

E. If screening identified one or more threatened or endangered species, INAI sites, or nature preserves within the area examined, IDNR will have 30 calendar days from the receipt of the AAR to provide its response to IDOT indicating whether any field studies are recommended, and whether or not further consultation, and preparation of a Detailed Action Report, is necessary.

2. Determining Need for Further IDNR Review

After the initial screening, IDOT will review proposed projects (using maps, aerial photos, field surveys, etc.) to determine if they potentially involve other resource issues listed in Figure 22-5A.

If IDOT determines on the basis of its review that a project does not involve any issues of interest to IDNR, the project is not required to be submitted to IDNR for further review.

If IDNR recommended surveys during the initial screening process, IDOT will provide copies of the survey results to IDNR. If the surveys were not conducted as recommended, IDOT will provide documentation to support this decision. When any of the resources in Figure 22-5A are determined to occur in the area the proposed project may affect, IDOT will determine whether the resources are covered by a programmatic agreement between IDOT and IDNR for avoidance and mitigation of impacts. If the resources are covered by such an agreement and the project will comply with the agreed terms, no further coordination with IDNR is necessary.

Resource	Further Clarification
Wetlands	
Streams	Includes Class I Streams and their riparian corridor
Forests/Trees	The bisecting of a forest or the removal of a significant number of trees*
Prairie/Savanna Areas	
IDNR Properties	
Nature Preserves/Natural Area Inventory sites or sites on the Register of Land and Water Reserves	
Threatened and Endangered Species	Includes previously documented occurrences of which IDOT is aware and occurrences identified through the Natural Heritage Database

* *Forests/Trees*. *If any of the following conditions apply, the project will be submitted to IDNR for completion of the natural resource review process:*

- *a project on new alignment involving impacts to a block of trees equal to or greater than 20 acres (8 ha);*
- *the removal of trees that would bisect or fragment a 20-acre (8 ha) or greater block of trees not associated with a stream corridor; or*
- *within a stream corridor:*
  - + *a project on new alignment on any stream segment, or*
  - + *a project on existing alignment if a Class I Stream is involved.*

Work involving the removal of dead and diseased trees for safety reasons need not be coordinated with IDNR for review.

INVOLVEMENT OF NATURAL RESOURCES
(IDNR Review)
Figure 22-5A

3. Coordinating with IDNR for Project Review

If identified resources involved with a project are not covered by a programmatic agreement, or if IDOT is unable to comply with the terms of such an agreement, IDOT will prepare and submit to the IDNR Transportation Program Manager a Biological Resources Review (BRR). The BRR shall indicate the results of fieldwork conducted and shall describe efforts made to avoid or minimize adverse impacts to the identified resources. If the translocation of a listed species is proposed, IDOT will provide sufficient information in the BRR to enable IDNR to evaluate the likelihood of success.

The IDNR Transportation Program Manager will review the BRR and supporting documentation and will coordinate with appropriate staff to determine whether further analysis or recommendations are required. After the review and within 90 days of receipt of the BRR, IDNR will submit one of the following responses to IDOT:

A. IDNR accepts the conclusions/proposals contained in IDOT's BRR and provides a form indicating successful closure of the threatened and endangered species consultation process and compliance with the Interagency Wetland Policy Act. If it appears the proposed project may result in the killing or injuring of an Illinois-listed animal species, IDNR may include a recommendation that IDOT should obtain an incidental taking authorization prior to proceeding with project construction. In this case, IDNR will close consultation upon receipt of an acknowledgement from IDOT indicating that it will apply for an incidental taking authorization prior to commencing any construction that would result in the killing or injuring of a listed animal species. The sign-off is valid for three years from the date of the AAR or from the date of resource issue resolution, if other resources are involved.

B. IDNR does not accept the conclusions/proposals contained in IDOT's BRR and makes recommendations on how impacts might be avoided or further minimized. Both agencies have 45 days to resolve any differences that may remain upon which time IDNR shall provide IDOT a sign-off indicating compliance with both State Acts. If it appears the proposed project may result in the killing or injuring of an Illinois-listed animal species, IDNR may include a recommendation that IDOT should obtain an incidental taking authorization prior to proceeding with project construction. In this case, IDNR will close consultation upon receipt of an acknowledgement from IDOT indicating that it will apply for an incidental taking authorization prior to commencing any construction that would result in the killing or injuring of a listed animal species. If resolution is not reached within the 45-day period, the process ends and is classified as having failed or partially failed to protect the resource involved; a decision is made to elevate the issue(s) within each agency; or, upon mutual agreement by both parties, negotiations may continue.

4. Follow-up Coordination and Reporting

IDOT shall implement the project and mitigation as agreed and will apply for an incidental taking authorization prior to commencing construction that would result in the killing or injuring of an Illinois-listed animal species. Any reports required by the Agreement shall be submitted to the IDNR Transportation Program Manager for review and coordination with other appropriate IDNR staff.

IDOT shall monitor wetland mitigation project(s) as agreed or required by the wetland compensation plan and shall submit reports to the IDNR as indicated in the plan.

IDNR may request a list from IDOT, partial or complete, of the projects in the preceding calendar year that were not submitted for IDNR review.

If, during development of a project, new information is obtained or the scope of the project changes to the extent the IDNR would have been involved initially, IDOT shall contact the IDNR Transportation Program Manager to discuss the need for further coordination. Also, if IDNR is concerned with a resource issue not reflected in Figure 22-5A or if new information becomes available after the project review has been completed, IDNR may request that IDOT submit the project for review.

On projects subject to initial screening and, when applicable, coordination with IDNR because of resource involvements, Districts must carefully monitor the progress of the project in relation to the timeframe for the validity of the screening results and the IDNR response on resource issue resolution (if resource issues are involved).

For projects processed as Categorical Exclusions (CEs), valid screening results and, when applicable, a valid IDNR response on final resource issue resolution must be in place when the project is submitted for CE approval and when the project is advertised for bid letting.*

For projects processed with an EA/FONSI, valid screening results and, when applicable, a valid IDNR response on final resource issue resolution must be in place when the EA is made available for public inspection and when the project is advertised for bid letting.*

For projects processed with an EIS, valid screening results and, when applicable, a valid IDNR response on final resource issue resolution must be in place when the Draft EIS is circulated, when the Final EIS is circulated, and when the project is advertised for bid letting.*

For projects that do not have resource involvements, if it becomes necessary to re-screen to provide valid results at the aforementioned processing points, the District should submit a memorandum to BDE requesting re-screening. A copy of the ESR and accompanying project location information that was returned to the District after initial

screening should be provided with the memorandum. BDE will re-screen the project and will coordinate the results with IDNR for review prior to sending them to the District.

For projects that have resource involvements, if it becomes necessary to re-coordinate with IDNR to provide a valid IDNR response at the aforementioned processing points, the district should send a memorandum to BDE requesting re-submittal of the project to IDNR. A copy of the original AAR should be provided with the memorandum. BDE will re-screen the project and will forward the AAR and the updated screening results to the IDNR Transportation Program Manager with a request for renewal of the IDNR response.

* *For adverse wetland impacts that are subject to coordination with IDNR as "Standard Review Actions" under the IDOT Wetlands Action Plan, IDNR approval of a conceptual wetland compensation plan will qualify as the "resource issue resolution" response on the wetlands aspect for purposes of the project environmental documentation. IDNR approval of a detailed wetland compensation plan will be required for "final resource issue resolution" prior to advertising "Standard Review Actions" for letting.*

For impacts to State-listed endangered or threatened species, the Biological Opinion provided by IDNR in response to a Detailed Action Report will be the "resource issue resolution" response on the endangered species aspect for purposes of the project environmental documentation. If the project will involve an incidental taking of a State-listed species, an incidental taking authorization from IDNR will be required for "final resource issue resolution" prior to awarding the project.