High-Speed Intercity Passenger Rail (HSIPR) Program

Application Form
Final Design (FD)/Construction (FY 2009)

Applicants for FD/Construction funds are required to submit this Application Form and other documents as outlined in Section G of this application. Please complete this document and provide any supporting documentation electronically. Supporting documentation should be logically and descriptively labeled. For each question, enter the appropriate information in the designated gray box. If a question is not applicable to your FD/Construction Project, please indicate "N/A." If you have questions about the HSIPR program or this application, please contact FRA at HSIPR@dot.gov.

A. Point of Contact and Project Information

(Must be consistent with information provided on applicant's SF 424)

(1) Submitting Agency: Illinois Department of Transportation		**Submitting Agency Authorized Representative Name and Title:** Mr. George Weber; Bureau Chief, Railroads		
Street Address: JRTC, Suite 6-600 100 W. Randolph Street	**City:** Chicago	**State:** IL	**Zip Code:** 60601	**Telephone Number:** (312) 793-4222 **Email:** george.weber@illinois.gov
Application Point of Contact (POC) Name and Title (If different): Same		**Application POC Telephone:** Same **Application POC Email:** Same		
(2) Name(s) of additional States applying *(if applicable):* none				
(3) Project name (Please provide a clear, concise, and descriptive name, example "Capital City River Bridge Replacement"): CP Wadsworth, IL Bridge Replacements				
(4) Total Cost of the FD/Construction Project (year of expenditure (YOE) Dollars*): $ 7,423,152				

Please provide proposed inflation assumptions and methodology, if applicable in the space below. *Please limit response to 1,000 characters.*

This project assumes a yearly rate of inflation of 2%. This figure is based on data from the previous four quarters of the AAR Railroad Cost Index, Table C 'Material Prices & Wage Rates Combined (excluding fuel)'

Of the total cost of the FD/Construction Project, how much would come from the FRA HSIPR Program: (YOE Dollars**) $ 3,711,576

Indicate percentage of total cost to be covered by matching funds 50 %

Applications require at least a 50 percent non-Federal match to be eligible for HSIPR funding.

* Year-of-Expenditure (YOE) dollars are inflated from the base year.
** This is the amount for which the applicant is applying.

(5) Project Abstract (In 3 - 5 sentences, please describe your proposed project):

This project will replace two existing steel and concrete composite railway bridges, located in Wadsworth, IL, that have reached the end of their servicable lives, and have impending speed restrictions that will lower the passenger rail speed limit from 79mph to 30 mph. The bridges are owned and maintained by the Canadian Pacific Railway (CP), and are located between Chicago, IL and Milwaukee, WI on Amtrak's Hiawatha and Empire Builder routes. Both bridges need to be replaced in order to meet the speed, reliability,and scheduling needs on Amtrak's Chicago to Milwaukee corridor.

B. Project Overview

(1) Indicate the activity(ies) for which you are applying *(check both if applicable)*:

☒ Final Design ☒ Construction

(2) What are the anticipated start and end dates for the FD/Construction Project? *(mm/yyyy)*

Start Date: 1/1/2011 **End Date:** 2/28/2012

(3) Project Overview Narrative. *Please limit response to 5,000 characters.*

Provide an overview of the main features and characteristics of the FD/Construction Project, including:

- The location of the project including name of rail line(s), State(s), and relevant jurisdiction(s) (include map if available in supporting documentation);
- The specific improvements proposed;
- Identification of service(s) that would benefit from the project, the stations that would be served, and the State(s) where the service operates;
- How the project was identified through a planning process and how the project is consistent with an overall plan for developing High-Speed Intercity Passenger Rail service;
- How the project will fulfill a specific purpose and need in a cost-effective manner;
- The project's independent utility;
- Any use of railroad assets or rights-of-way, and potential use of public lands and property; and
- Other rail services, such as commuter rail and freight rail that will make use of, or otherwise be affected by, the project.

This project was identified by the Illinois Department of Transportation, Wisconsin Department of Transportation, Amtrak and CP as a priority within a comprehensive corridor review of Intercity Passenger Rail requirements between Chicago and Milwaukee. IDOT includes this project in their Statewide Transportation Infrastructure Plan (STIP) as infrastructure improvements to the Chicago-Milwaukee corridor.

Two steel and concrete composite railway bridges are reaching life expiry and are being monitored for pending speed restriction of 30 mph by Canadian Pacific Railway (CP). The bridges are located immediately north of Wadsworth, Illinois at MP 46.78 and MP 47.27 of the CP C&M Subdivision. Because the bridges are located in close proximity to each other, the logistics are optimal to replace both bridges at the same time. Both bridges need replacement to meet the reliability, speed, and scheduling needs of passenger rail in the Amtrak Chicago - Milwaukee corridor. Although this project seeks to replace the bridges in order to maintain existing train speeds, the new bridges are designed to accommodate speeds of 110mph. Correspondence that documents the pending speed restriction is shown in Exhibit B.3.1, and the most recent Bridge Inspection Report is shown in Exhibit B.3.2.

Upon completion, the project will avoid service disruption to the 14 Amtrak Hiawatha, 2 Amtrak Empire Builder, and 20 CP freight trains per day. The primary benefits of maintaining speeds on the bridges largely accrues to passenger trains, since passenger trains operate at higher speeds than freight trains and travel with more precise schedules. However, a 30 mph speed restriction will also lower the freight speed limit, and will result in additional delays to freight trains as well.

Construction activities are sequenced to construct new abutments for the bridges, remove the existing spans, then lower the new spans in place, all while the main line corridor remains in service. The plan is to stage the work by replacing the bridge spans one track at a time on the CP two track main line. In this way, there will always be a track available for

passenger and freight train movements. The proposed installation work method will be conducted within the existing railway right of way. The new bridge abutments will be placed such that the hydraulic capacity beneath the bridge spans is increased or maintained. Staging of materials and assembly of structures will be done on CP property and will not require use of any public land or public property.

The optimal timing of the construction is strategically sequenced to follow the commissioning of the Truesdell, Wisconsin crossover HSR initiative which was awarded to Wisconsin as an ARRA Track 1A project. The Truesdell crossover will divide the long running time between existing crossovers which are currently 19 miles apart. With the Trusedell crossover investment in place, one track at a time would be closed to install the new bridges. Timing the bridge replacement in this way will minimize disruption to the passenger and freight service on the corridor.

The investment will benefit the Amtrak intermodal stations at Chicago, Glenview, Sturtevant, General Mitchell Airport, the Milwaukee Intermodal, as well as proposed new stations to be locatated on the new Milwaukee-Madison service line. The Amtrak Empire Builder, in addition, operates through Minnesota, North Dakota, Montana and Washington and so these states will benefit as well. Reliable and efficient service will promote economic development in the vicinity of stations by attracting a steady base of passengers.

In the event that a speed restriction needs to be applied to the existing bridges, due to their condition, 16 daily Amtrak trains will be adversely affected. In turn, this affects approximately 2,500 passenger rail travelers on these trains each day who will see some level of delay and increased transit time due to the speed restriction. The investment has "independent utility" because it because it will provide tangible and measurable benefits even if no additional investment is made in the corridor.

(4) Status of Activities: Are any FD or Construction activities that are part of this planned investment underway or completed?

☐ Yes (Final Design) ☐ Yes (Construction) ☒ No

If "Yes," please describe the activities that are underway or completed in the table below.[1] *If more than three activities, please detail in an attachment to this application*

Activity	Description	Completed? (If yes, check box)	Actual Initiation Date (mm/yyyy)	Actual or Anticipated Completion Date (mm/yyyy)
		☐		
		☐		
		☐		

(5) Describe the project service objectives *(check all that apply):*

☐ Additional Service Frequencies
☒ Improved Service Quality
☐ Improved On-Time Performance on Existing Route
☒ Increased Average Speeds/Shorter Trip Times
☐ Other *(Please Describe):*

(6) Types of capital investments proposed *(check all that apply):*

[1] Please note: (a) requests for reimbursement of costs incurred prior to enactment of the relevant appropriations will not be considered and (b) supporting documentation for activities may also be required as noted in Section 3.3.1.5 of the FY 2009 FD/Construction NOFA.

- ☒ Structures (Bridges, Tunnels, etc.)
- ☐ Track Rehabilitation
- ☐ New or Restored Sidings/Passing Tracks
- ☐ Major Interlockings
- ☐ Station(s)
- ☐ Communication, Signaling and Control
- ☐ Rolling Stock Refurbishments
- ☐ Rolling Stock Acquisition
- ☐ Support Facilities (Yards, Shops, Admin. Buildings)
- ☐ Grade Crossing Improvements
- ☐ Electric Traction
- ☐ Other *(Please Describe)*:

(7) Right-of-Way-Ownership. Provide information for all railroad right-of-way owners in the FD/Construction Project area. Where railroads currently share ownership, identify the primary owner. *If more than three owners, please detail in an attachment to this application.*

Type of Railroad	Railroad Right-of-Way Owner	Route Miles	Track Miles	Status of Agreements to Implement Projects
Class 1 Freigh	Canadian Pacific Railway	0.5	1.0	Preliminary Executed Agreem
Amtrak				Master Agreement in Place
Amtrak				Master Agreement in Place

(8) Services. Provide information for all existing rail services within project boundaries (freight, commuter, and intercity passenger). *If more than three services, please detail in an attachment to this application.*

Type of Service	Name of Operator	Top Speed Within Project Boundaries		Number of Route-Miles Within Project Boundaries	Average Number of Daily One-Way Train Operations[2] within Project Boundaries	Notes
		Passenger	Freight			
Intercity Pa	Amtrak	79		0.5	16	
Freight	Canadian Pacific Railway		60	0.5	20	
Freight	Wisconsin and Southern Railroad		60	0.5	0	Infrequent use by WSOR

(9) Benefits to Non-Intercity Passenger Rail Services. If there will be benefits to non-intercity passenger rail services (e.g. commuter and freight), describe in detail the nature of those benefits. Include specific details on speed, number of daily operations, on-time performance, or other benefits expected to accrue to the non-intercity passenger rail services.

A 30 mph speed restriction will also lower the freight speed limit, and result in delays to freight trains in addition to passenger trains. Although freight schedules are less critical than passenger train schedules, a reduction in freight speeds would further reduce the overall capacity in the corridor.

Although no commuter trains operate over these bridges, commuter service operated by the Chicago area commuter rail service provider Metra, in the corridor south of the bridges, would benefit from having Amtrak trains arrive on time at the scheduled commuter windows. Late arrival of Amtrak trains will result in additional congestion to the already congested Metra commuter corridor.

(10) Rolling Stock Type. Describe the fleet of locomotives, cars, self-powered cars, and/or trainsets that would be intended to provide the service upon completion of the project. *Please limit response to 1,000 characters.*

Amtrak's existing Hiawatha diesel-electric locomotive and coach fleet will continue to service the Hiawatha line after the project is complete. In addition, the State of Wisconsin reached agreement with Talgo in 2009 to purchase 2 additional trainsets that will service the Hiawatha line.

[2] One daily round-trip train operation should be counted as two daily one-way train operations.

(11) Intercity Passenger Rail Operator. Provide the status of agreements with partners that will operate the benefiting high-speed rail/intercity passenger rail service(s) upon completion of the planned investment (e.g., Amtrak).
Name of Operating Partner: Amtrak
Status of Agreement: Partner consulted, awaiting support commitment

C. Eligibility Information

(1) Establish Completion of Preliminary Engineering. In the space(s) below, please list the documents that establish completion of Preliminary Engineering for the project covered by this application. See Appendix 2 of FY 2009 FD/Construction NOFA. If more than four references need to be listed, please place the additional information in Section F.

Document Name	Completion Date (mm/yyyy)
See Exhibit C.1.1 : PE Document 1- Project Summary and Management Approach	5/2010
See Exhibit C.1.2 : PE Document 2 - Preliminary Engineering Plans	5/2010

(2) Establish Completion of NEPA Documentation (the date document was issued and how documentation can be verified by FRA). The following are approved methods of NEPA verification (in order of FRA preference): 1) References to large EISs and EAs that FRA has previously issued, 2) Web link if NEPA document is posted to a website (including www.fra.dot.gov), 3) Electronic copy of non-FRA documents attached with supporting documentation, or 4) a hard copy of non-FRA documents (large documents should not be scanned but should be submitted to FRA via an express delivery service). See Section 3.2 of FY 2009 FD/Construction NOFA.

Documentation	Date *(mm/yyyy)*	Describe How Documentation Can be Verified
☒ Categorical Exclusion Documentation	5/2010	See Exhibit C.2.1: Categorical Exclusion Worksheet
☐ Final Environmental Assessment		
☐ Final Environmental Impact Statement		

(3) Indicate if there is an environmental decision from FRA (date document was issued and web hyperlink if available).

Documentation	Date *(mm/yyyy)*	Hyperlink *(if available)*
☐ Categorical Exclusion Determination		
☐ Finding of No Significant Impact		
☐ Record of Decision		

D. Public Return on Investment

(1) 1A. Transportation Benefits. *See Section 4.2.1 of FY 2009 FD/Construction NOFA. Please limit response to 8,000 characters:*

How is the project anticipated to improve Intercity Passenger Rail (IPR) service? Describe the overall transportation benefits, including information on the following *(please provide a level of detail appropriate to the type of investment):*

- IPR network development: Describe improvements to intermodal connections and access to stations as well as actual and potential expansions to the IPR network that may result from the project (including opportunities for interoperability with other services).
- IPR service performance improvements *(also provide specific metrics in table 1B below)*: Please describe service performance improvements directly related to the project, as well as a comparison with the existing service (*without project*). Describe relevant reliability improvements (e.g., increases in on-time performance, reduction in operating delays), reduced schedule trip times, increases in frequencies, aggregate travel time savings (resulting from reductions to both schedule time and delays, expressed in passenger-minutes), and other relevant performance improvements.
- IPR service results *(also provide specific metrics in table 1B below)*: Describe relevant outcomes of the service improvement such as increases in ridership, passenger-miles, and other results in comparison with the existing service (*without project*).
- Suggested supplementary information (*only when applicable*):
  - Transportation Safety: Describe overall safety improvements that are anticipated to result from the FD/Construction Project, including railroad and highway-rail grade crossing safety benefits, and benefits resulting from the shifting of travel from other modes to safer IPR service.
  - Cross-modal benefits from the FD/Construction Project, including benefits to:
    - ✓ Commuter Rail Services – Service improvements and results (applying the same approach as for IPR above).
    - ✓ Freight Rail Services – Service performance improvements (e.g., increases in reliability and capacity), results (e.g. increases in ton-miles or car-miles of the benefiting freight services), and/or other congestion, capacity or safety benefits.
    - ✓ Congestion Reduction/Alleviation in Other Modes; Delay or Avoidance of Planned Investments – Aviation and highway congestion reduction/alleviation, and/or other capacity or safety benefits. Describe any planned investments in other modes of transportation that may be avoided or delayed due to the improvement to IPR service that will result from the project.

In the existing condition, the two bridges proposed for replacement carry passenger trains which can reach speeds of 79 mph given current speed restrictions. However, without replacement of the deteriorating bridges, the host railroad will assign a speed restriction of 30 mph within the next year, and could drop down to 10 mph if and when conditions deteriorate further. The new bridges will avoid approximately 1.7 minutes of additional travel time caused by slow orders for approximately 2,500 passenger rail travelers each day. This is equivalent of 71 person-hours per day saved, or assuming an eight hour productive day, the time of 9 full-time-equivalent people. This is a recurring benefit that will be recognized for the 80-100 year lifespan of the bridges.

The bridge replacements will recognize benefits beyond preventing any absolute increases in travel time. Southbound Amtrak trains will avoid arriving late “out of slot” to the Metra commuter corridor, approximately 14 miles south of the Wadsworth bridges. Trains arriving “out of slot” are often further delayed by 10-15 minutes, since Amtrak trains must then ‘follow’ Metra commuter trains into Chicago. Therefore, maintaining current Amtrak train speeds could prevent potential delays that could be as high as 17 minutes per train.

One of the primary goals of the Midwestern regional rail plan is to provide connectivity to its major urban centers. The Chicago-Milwaukee corridor is the gateway for connectivity from Illinois to states in the north-central region of the country: Wisconsin, Minnesota and beyond. Currently, 14 Amtrak Hiawatha trains per day serve the Milwaukee Intermodal depot, Milwaukee Airport Intermodal Station, Sturtevant Station, Glenview Station and Chicago Union Station; all of which feature emerging, strong intermodal connections to airports (General Mitchell, O'Hare, Midway), bus terminals (Union Station, Milwaukee Intermodal), commuter rail stations (Glenview, Union Station), subway and transit stations (CTA in Chicago's loop), ferry ports (Lake Express in Milwaukee) and other modes of transportation. Two long-distance Amtrak Empire Builder trains (Chicago-Seattle) serve three stations in the vicinity: Chicago Union Station, Glenview and Milwaukee Intermodal.

Transportation modes between Chicago and Milwaukee are dominated by automobile traffic, served by Interstate 94, which runs from downtown Chicago north approximately 90 miles into downtown Milwaukee. It is the only major, direct route by freeway between the two cities. Average Daily Traffic (ADT) along I-94 ranges from approximately 65,000 vehicles along the middle parts of the corridor near the Wisconsin-Illinois state line, to 150,000 vehicles near downtown Milwaukee, and to as high as 300,000 just outside of downtown Chicago. Travel times on I-94 can vary significantly between peak and off-peak periods and range from 1 ¾ to 2 ½ hours.

On a percentage basis, relatively few trips use bus, air, or rail to travel between Chicago and Milwaukee. Private shuttle bus companies such as Greyhound, Coach Express and Megabus run shuttles between Chicago's O'Hare and Midway Airports and Milwaukee County's Mitchell International, with intermediate stops in Racine and Kenosha. The most recent modal data of the number of intercity person-trips by travel mode based on year 2000 data, shows that 98.6% of travel between Chicago and Milwaukee is by auto. Of the 14.5 million trips that were made between the two cities, 14.2 million were by vehicle. 72% of all trips made were for business purposes.

The passenger demand for the Hiawatha Service has increased 80% during the past five federal fiscal years. Fast and reliable service will ensure that the demand for passenger rail as an alternative means of travel continues to grow. A shift toward passenger rail travel as a mode of transportation in the Chicago-Milwaukee corridor is beneficial since passenger rail is 18 times safer than travel by automobile on the public highways. In turn, road congestion and demand for further road expansion will be alleviated as more travellers choose to travel by rail. IDOT, WisDOT, Canadian Pacific Railway and Amtrak are working together to further define the scope of future passenger rail operations and required infrastructure on the corridor to continue the movement toward better service in intercity passenger rail.

The bridges also play an important role in the on-time delivery of goods shipped on the Canadian Pacific Railway and other freight carriers that travel on their tracks. This corridor is an important conduit that brings goods and supplies to and from the businesses and consumers in the central and northern United States and Canada.

1B. Operational and Ridership Benefits Metrics: In the table(s) below, provide information on the anticipated transportation benefits and ridership changes projected to result from the project. Please do not include benefits and changes that would occur even if the project is not implemented (for example, as a result of population or economic growth factors).

Project/Program Metric	Actual— FY 2010 levels	Projected Totals by Year (Actual Levels Plus Project-Caused Changes Only)		
		First Full Year After Project Completion	Fifth Full Year After Project Completion	"X" If N/A or Unsure
Annual passenger-trips	738,231 (Hiawatha Service FY '09)	792,669 (Hiawatha FY 2012)	871,549 (Hiawatha FY 2016)	☐
Annual passenger-miles (millions)	63.5 (Hiawatha)	68.2 (Hiawatha)	75.0 (Hiawatha)	☐
Annual IPR seat-miles offered (millions)	155.0 (Hiawatha)	155.0 (Hiawatha)	155.0 (Hiawatha)	☐
Average number of daily round train trip operations (typical weekday)	7 (Hiawatha), 1 (Empire Builder)	7 (Hiawatha), 1 (Empire Builder)	7 (Hiawatha), 1 (Empire Builder)	☐
On-time performance (OTP)[3] – percent of trains on time at endpoint terminals	88.5% (Hiawatha), 83.9% (Empire Builder)	Goal of 96% (Hiawatha Service), 85% (Empire Builder)	Goal of 96% (Hiawatha Service), 85% (Empire Builder)	☐
Average train operating delays: minutes of en-route delays per 10,000 train-miles[4]	1,413 (Hiawatha Service, Feb 2010), Empire Builder Unkown	Unknown	Unknown	☐
Top operating speed (mph)	79	79	79	☐
Average scheduled operating speed (mph) (between endpoint terminals)	58 (Hiawatha Service), 51 (Empire Builder)	58 (Hiawatha Service), 51 (Empire Builder)	58 (Hiawatha Service), 51 (Empire Builder)	☐

	FD/ Construction Period	First full Year of Operations	Fifth full Year of Operations
Anticipated number of annual onsite and other direct jobs created (on a 2080 work-hour per year, full-time equivalent basis)	12.4 person-years	0	0

[3] As calculated and reported by Amtrak according to its existing procedures and definitions. An example can be found at page E-7 of the May 2009 Monthly Performance Report at: http://www.amtrak.com/servlet/ContentServer/Page/1241245669222/1241256467960
'On-time' is defined as within the distance-based thresholds originally issued by the Interstate Commerce Commission, which are: 0 to 250 miles and all Acela trains—10 minutes; 251 to 350 miles—15 minutes; 351 to 450 miles—20 minutes; 451 to 550 miles—25 minutes; and 551 or more miles—30 minutes.

[4] As calculated by Amtrak according to its existing procedures and definitions. Useful background can be found at pages E-1 through E-6 of Amtrak's May, 2009 Monthly Performance Report (see previous footnote).

(2) Environmental Benefits. *Please limit response to 4,000 characters.*

How will the FD/Construction project improve environmental quality, energy efficiency, and reduction in the Nation's dependence on oil? Address project-caused changes in the following:

- Any projected reductions in key emissions (CO2, O^3, CO, PMx, and NOx) and their anticipated effects. Provide any available forecasts of emission reductions from a baseline of existing service for the first and fifth years of full operation *(provide supporting documentation if available).*
- Any expected energy and oil savings from traffic diversion from other modes and changes in the sources of energy for transportation. Provide any available information on changes from the baseline of the existing service for the first and fifth years of full operation (*provide supporting documentation if available*).
- Use of green methods and technologies. Address green building design, "Leadership in Environmental and Energy Design" building design standards, green manufacturing methods, energy efficient rail equipment, and/or other environmentally-friendly approaches.

The outcome from the proposed bridge replacements in Wadsworth will create a cost effective, long-term benefit to the human and wildlife environment in the project area. The project will be constructed in an existing active rail corridor, in almost the same footprint as the existing bridges. The modern concrete ballasted deck bridges will replace the approximately 80-year-old existing structures, and will utilize modern best practice in railway bridge design. The installation method, which is designed to be sensitive to the surrounding natural resources, is such that the Illinois Department of Natural Resources has concluded that adverse effects are unlikely. Statements from the DNR can be found in Exhibit C.2.1.

The immediate benefit to the environment from bridge replacement results from the avoidance of speed restriction to the Amtrak passenger trains. A 30mph slow order is estimated to increase diesel consumption for an Amtrak train by 40,000 gallons per year and increase CO2 emissions by 448 tons per year. Avoidance of speed restrictions on freight trains amounts to an estimated reduction of 111,000 gallons of diesel consumption per year and 1240 tons of CO2 emissions per year.

Integral with coordination with the transportation planning efforts in the corridor is providing a design that is consistent with water demand and drainage needs of the community. Provisions for bridge spans instead of large culverts meet the Lake County Stormwater Commission needs for providing more than adequate water flow in the event of flooding of the nearby Des Plaines River.

(3) Livable Communities Project Benefits Narrative. *Please limit response to 3,000 characters.*

How will the FD/Construction Project foster Livable Communities? Address the following:

- Integration with existing high density, livable development: Provide specific examples, such as (a) central business districts with walking/biking and (b) public transportation distribution networks with transit-oriented development.
- Development of intermodal stations: Describe such features as direct transfers to other modes (both intercity passenger transport and local transit).

Bridges such as the CP Wadsworth bridges are a key component of the passenger rail networks that connect the growing Chicago metropolitan area with Milwaukee, and other regions beyond the central and northern United States. Suburban sprawl and the increasing congestion on suburban state highways and local roads have prompted the public to become more aware of the benefits, especially from a transportation perspective, of living in more densely populated communities . Americans are choosing to live in large metropolitan areas more now than ever in the past, and this phenomenon is leading to a greater need for efficient transportation between high population centers. As the country places greater emphasis on alternative transportation options, such as intercity passenger rail, communities that provide these options will become centers for economic growth and prosperity in the years to come. Providing safe, livable urban communities is a priority. Developing, maintaining, and improving intercity passenger rail lines such as Amtrak's Hiawatha and Empire Builder support these priorities.

Chicago is the prime example of a livable community. With easily accessible public transportation and pedestrian and bicycle distribution networks, Chicago has gone to great lengths in recent years to promote public transportation and transit oriented development. The southern terminal of the Amtrak Hiawatha and Empire Builder routes is Chicago Union Station, in Chicago's downtown central business district. Union Station provided direct connectivity to a total of 9 Amtrak service lines, as well as several Metra commuter rail lines to Chicago's suburbs. Within just a

few blocks of Union Station are several other available modes of transportation, including additional Metra commuter rail lines, CTA bus and light rail transit, bicycle paths, pedestrian access to the CBD, and even highway transporation.

Milwaukee is another example of a Midwestern city embracing sustainable, livable communities. The Milwaukee Intermodal Station, which is the northern terminal of the Amtrak Hiawatha service as well as a stop on the Empire Builder, connects several forms of public transport including Amtrak, Coach USA, Greyhound Lines, Jefferson Lines, Indian Trails, Lamers as well as Milwaukee city buses. Connecting these large metropolitan areas with safe, reliable rail service also creates economic opportunities for smaller communities between the larger population centers by giving them better access to the assets of lager cities.

Renewal of the aging railroad infrastructure on CP's C&M Subdivision is essential to the continued growth in intercity passenger service volumes, and is consistent with other regional and state development plans.

E. Project Success Factors

(1) Project Management Approach and Applicant Qualifications Narrative: *Please provide separate responses to each of the following. Additional information on project management is provided in Section 4.2.2 of the FY 2009 FD/Construction NOFA.*

1A. Applicant qualifications. *Please limit response to 2,000 characters.*
Management experience: Does the applicant have experience in managing rail investment projects and managing projects of a similar size and scope to the one proposed in this application?

- ☒ Yes - Briefly describe experience (brief project(s) overview, dates)
- ☐ No - Briefly describe expected plan to build technical and managerial capacity; provide reference to Project Management Plan.

The IDOT Bureau of Railroads administers rail service programs that support freight rail and passenger service provided by Amtrak. The state sponsors 20 rail passenger train services between Chicago and Springfield, Champaign-Urbana, Quincy and Milwaukee. IDOT also has a history of financing and overseeing rail improvement projects under its freight rail program, including the CREATE project, a multi-agency rail investment program administered by IDOT. Some projects involved with this program are listed below:

PROJECT DESCRIPTION		STATUS		
	Cost ($M)	Phase I	Phase II	Phase III
McCook Connection	13.1	Complete	Complete	Complete
Ogden Junction to75th St.	Unknown	Complete	Complete	In Progress
Englewood Flyover	133	Complete	In progress	Not Started

In addition, CP has a history of successfully completing, on-time and within budget, projects that have been the recipients of federal and state funding. A list of recent CP projects that were developed in cooperation with State governments is shown below.

PROJECT DESCRIPTION	STATE SPONSOR	COST ($M)	YEAR	STATUS
Battle Creek Bridge replacement	MN	$ 6	2009-2010	In progress
Canadian Subdivision rail replacement	NY	$ 12	2006-2010	In progress
Intercity passenger reliability improvement	WI	$ 12	2010	announced
C&M Subdivision rail replacement	WI	$ 10	2009	completed
General Mitchell Station	WI	$ 4	2005	completed
Rail yard bridge over State Highway 100	MN	$ 10	2002	completed

The Project Management Plan included with this application (see Exhibit C.1.1) has been developed based on CP's experience in implementing the projects listed above.

1B. Describe the organizational approach for the different project stages included in this application (final design, construction), including an organization chart, the roles of staff, contractors, and project stakeholders in implementing the project. For construction activities, provide relevant information on work forces, including railroad contractors and grantee contractors. *Please limit response to 2,000 characters.*

A CP Project Manager (PM) will be responsible for project oversight and management. The PM will be tasked to ensure all necessary environmental permitting has been obtained, that safety and requirements are adhered to and the scope of work is completed on-time and on-budget. Tendering of contract services and coordination between CP departments will also be the role of the PM.

The PM will coordinate bridge construction with each of the Structures, Track, and Contract Supervisors who will perform their work using CP unionized labor forces and contracted construction services. Planning of track outages and reduction of freight traffic during construction will be handled through CP's Product Design department and coordinated with the PM. CP Accounting will ensure Funding Program reporting requirements are fulfilled and project

costs are captured and recovered.

A project organization chart is included in Exhibit C.1.1.

1C. Does the FD/Construction Project require approval by FRA of a waiver petition from a Federal railroad safety regulation? (Reference to, or discussion of, potential waiver petitions will not affect FRA's handling or disposition of such waiver petitions.)

☐ Yes- If yes, explain and provide a timeline for obtaining the waivers
☒ No

Please limit response to 1,500 characters.

No waivers are needed for the proposed bridge replacements.

1D. Provide a preliminary self-assessment of project uncertainties and mitigation strategies (consider funding risk, schedule and budget risk, and stakeholder risk). Describe any areas in which the applicant could use technical assistance, best practices, or support from others, including FRA. *Please limit response to 2,000 characters.*

As with any construction project, projects are planned and managed in recognition of inherent onsite construction and environmental risks. Canadian Pacific's project manager for the project has identified potential risks, and will address these concerns with appropriate mitigating actions. A list of these risks and mitigation strategies is included in Exhibit C.1.1.

(2) Stakeholder Agreements Narratives. *Additional information on Stakeholder Agreements is provided in Section 3.3.1.5 of the FY 2009 FD/Construction NOFA.*

Under each of the following categories, describe the applicant's progress in developing requisite agreements with key stakeholders. In addition to describing the current status of any such agreements, address the applicant's experience in framing and implementing similar agreements, as well as the specific topics pertaining to each category.

2A. Ownership Agreements – Describe how agreements will be finalized with railroad infrastructure owners listed in the "Right-of-Way Ownership" and "Service Description" tables in Section B. If appropriate, "owner(s)" may also include operator(s) under trackage rights or lease agreements. Describe how the parties will agree on project design and scope, project benefits, project implementation, use of project property, project maintenance, scheduling, dispatching and operating slots, project ownership and disposition, statutory conditions and other essential topics. Summarize the status and substance of any ongoing or completed agreements. *Please limit response to 2,000 characters.*

CP Railway is the only right-of-way owner within the limits of the new bridge construction and staging areas. IDOT and CP are in the process of finalzing an agreement that discusses the responsibilitiesof each party with regard to the funding, design, construction, operation, and maintenance of the bridges. A draft of this agreement is shown in Exhibit E.2.1.

2B. Operating Agreements – Describe the status and contents of agreements with the intended operator(s) listed in "Services" table in the Project Overview section above. Address project benefits, operation and financial conditions, statutory conditions, and other relevant topics. *Please limit response to 2,000 characters.*

A master agreement is currently in place between IDOT and Amtrak. IDOT, along with the Wisconsin Department of Transporation, have an ongoing relationship with Amtrak, and have supported Amtrak's Hiawatha service line since 1989. A copy of the Grant Agreement for the Provision of Rail Passenger Service between Amtrak and the State of Illinois is included as Exhibit E.2.2.

2C. Other Stakeholder Agreements – Provide relevant information on other stakeholder agreements including State and

local governments. *Please limit response to 2,000 characters.*

IDOT and CP have developed a draft agreement that details the sources of funding and the responsibilities of each of the parties. This agreement details the standards to which the bridges will be built and operated, the conditions of the agreement, and details on other items such as billing and invoicing. The agreement also details the matching commitment, whereby CP will contribute a 50% match to the cost of the project. The agreement is included as Exhibit E.2.1

2D. Agreements with operators of other types of rail service – Describe any cost sharing agreements with operators of non-intercity passenger rail service (e.g., commuter, freight). *Please limit response to 2,000 characters.*

No other cost-sharing agreements are in place or are required for this project.

(3) Financial Information.

3A. Capital Funding Sources. Please provide the following information about your funding sources (if applicable).

Non-FRA Funding Sources	New or Existing Funding Source?	Status of Funding[5]	Type of Funds	Dollar Amount (YOE Dollars)	% of Project Cost	Describe Uploaded Supporting Documentation to Help FRA Verify Funding Source
CP Railway	New	Committed		$3,711,576	50	See Exhibit E.3.1 CP Letter of Funding Commitment
	New	Committed				
	New	Committed				

[5] Reference Notes: The following categories and definitions are applied to funding sources:

Committed: Committed sources are programmed capital funds that have all the necessary approvals (e.g. legislative referendum) to be used to fund the proposed project/program without any additional action. These capital funds have been formally programmed in the State Rail Plan and/or any related local, regional, or State Capital Investment Program CIP or appropriation. Examples include dedicated or approved tax revenues, State capital grants that have been approved by all required legislative bodies, cash reserves that have been dedicated to the proposed project/program, and additional debt capacity that requires no further approvals and has been dedicated by the sponsoring agency to the proposed project/program.

Budgeted: This category is for funds that have been budgeted and/or programmed for use on the proposed project but remain uncommitted, (i.e., the funds have not yet received statutory approval.) Examples include debt financing in an agency-adopted CIP that has yet to be committed in their near future. Funds will be classified as budgeted where available funding cannot be committed until the grant is executed, or due to the local practices outside of the project sponsor's control (e.g., the project development schedule extends beyond the State Rail Program period).

Planned: This category is for funds that are identified and have a reasonable chance of being committed, but are neither committed nor budgeted. Examples include proposed sources that require a scheduled referendum, requests for State/local capital grants, and proposed debt financing that has not yet been adopted in the agency's CIP.

3B. Capital Investment Financial Agreements: Describe any cost sharing contribution the applicant intends to make towards the FD/Construction Project, including its source, level of commitment, and agreement to cover cost increases or financial shortfalls. Describe the status and nature of any agreements between funding stakeholders that would provide for the applicant's proposed match, including the responsibilities and guarantees undertaken by the parties. Provide a brief description of any in-kind matches that are expected. *Please limit response to 2,000 characters.*

The 50% project funding contribution on the applicant's end, in the amount of $3,711,576, will be funded entirely by CP Railway. In addition, CP has agreed to cover any and all costs in excess of the stated project cost. This commitment is described in an agreement between IDOT and CP, included as Exhibit E.2.1. CP has also stated that it will contribute two prefabricated bridge decks, as a non-cash contribution towards the project.

3C. Operating Financial Plan: Does the applicant expect that the State operating subsidy requirements for the benefiting intercity passenger rail service will significantly increase, **as a result of the project**, during the first five years after project completion?

☐ Yes ☒ No

If "Yes," please complete the table below (in YOE dollars) and answer the following questions. *Please limit response to 2,000 characters.*

(a) How did you project future State operating subsidies for the benefiting service(s); and

(b) What is the source, nature, and likelihood of the funding that will enable the State to finance the projected increases in annual operating subsidies due to the project?

Operating subsidies will not increase as a result of this project.

Subsidy	Actual— FY 2010 levels (YOE Dollars)	Projected Totals by Year (Actual Levels Plus Project Caused Changes Only) (YOE Dollars)	
		First Full Year After Project Completion	Fifth Full Year After Project Completion
State operating subsidy (total for all benefiting services)			

(4) Financial Management Capacity and Capability – Provide audit results and describe applicant capability to absorb potential cost overruns, financial shortfalls, or financial responsibility for potential disposition requirements (include as supporting documentation as needed). Provide statutory references/legal authority to build and oversee a rail capital investment. *Please limit response to 2,000 characters.*

IDOT's mission is to provide for a modern, safe, and efficient transportation infrastructure. It manages multi-billion dollar capital improvement programs, and is experienced in using federal grants to effiicently develop the state's infrastructure. A copy of the IDOT's most recent audit results can be found at http://www.auditor.illinois.gov/Audit-Reports/Compliance-Agency-List/IDOT/FY09-IDOT-Comp-full.pdf.

Per the agreement that IDOT has developed with CP, CP has agreed to cover any cost overruns in the project. CP is well positioned to remain solvent for the foreseeable future, and is confident in its financial health and ability to financially support the Wadsworth bridge replacements through project completion. Canadian Pacific, parent company of the Soo Line Railroad, is the 6th largest Class 1 railroad in North America and is a publicly traded company on the Toronto and New York Stock Exchanges. In full year 2009, the company earned $4.3B in revenue and had a net income of $612M. In 2010, the company expects to spend $700M in capital programs to maintain rail, ballast, crossties, automated signal systems, buildings, equipment and invest in information technology, positive train control, efficiency and other opportunity capital projects. A copy of the 2009 CP Annual Report is included as Exhibit E.4.1.

(5) Timeliness of Project Completion – Provide the following information on the dates and duration of key activities, if applicable. *For more information, see Section 4.2.4 of the FY 2009 FD/Construction NOFA.*

Final Design Duration:	3 months
Construction Duration:	8 months
Rolling Stock Acquisition Duration:	months
Rolling Stock Testing Duration:	months
Service Operations Start date:	*(mm/yyyy)*

(6) If applicable, describe how the project will promote domestic manufacturing, supply and other industries, including United States-based equipment manufacturing and supply industries. *Please limit response to 1,500 characters.*

The project will require several hundred cubic yards of cast-in-place concrete, which support local concrete production plants over the course of several months during project construction. The steel piles, bridge girders, and steel reinforcement needed will generate business for domestic steel manufacturers. Specialized track equipment will be needed to install and remove the bridge decks and abutments over the course of several months. The use of specialized machinery for this project as well as others may prompt the need for more specialized heavy equipment, generating new orders at machine manufacturing plants.

(7) If applicable, describe how the project will help develop U.S. professional railroad engineering, operating, planning and management capacity needed for sustainable HSR/IPR development in the United States, including promotion of a diverse workforce. *Please limit response to 1,500 characters.*

This project will help develop the job skills of several different trades which will be in volved with this project. These include railroad labor forces, concrete finishers, iron workers, and machine operators. The unique job skills, safety training, and safety certifications will be valuable in the future years, and will be in high demand as the number of railroad construction projects increases due to the recent influx of investment . Similarly, the project will also help

develop valuable skills for a number of professionals that will be involved. This includes bridge and track design engineers, construction schedulers, rail operations managers, and construction inspectors. New investment in the railroad industry will increase the need for these jobs, and will attract more professionals into the industry. This project will help to develop the professional workforce whose skills will be increasingly in demand in future years.

F. Additional Information

(1) Please provide any additional information, comments, or clarifications and indicate the section and question number that you are addressing (e.g., Section B, Question 3). *This section is optional.*

In the table below the document titles refer to the specific application section that the document supports.

(2) Optional Supporting Documents (If you have uploaded documents to *Grants.gov*, please provide document title, filename, and description here)

Document title	Filename	Description and Purpose
Exhibit B.3.1	**F_ExhibB.3.1.pdf**	**Correspondence on Speed Restrictions**
Exhibit B.3.2	**F_ExhibB.3.2.pdf**	**Bridge Inspection Report**
Exhibit C.1.1	**F_ExhibC.1.1.pdf**	**PE Document 1 - Project Summary and Management Approach**
Exhibit C.1.2	**F_ExhibC.1.2.pdf**	**PE Document 2 -Preliminary Engineering Plans**
Exhibit C.2.1	**F_ExhibC.2.1.pdf**	**Categorical Exclusion**
Exhibit E.2.1	**F_ExhibE.2.1.pdf**	**IDOT-CP Draft Agreement**
Exhibit E.2.2	**F_ExhibitE.2.2.pdf**	**IDOT-Amtrak Rail Service Agreement**
Exhibit E.3.1	**F_ExhibE.3.1.pdf**	**CP Letter of Funding Commitment**
Exhibit E.4.1	**F_ExhibE.4.1.pdf**	**CP 2009 Annual Report**

G. Checklist of Application Materials

Required Documents	Reference	Description	Format
☒ HSIPR FD/Construction Application Form	HSIPR FY 2009 FD/ Construction NOFA Section 3.3.1.1	This document to be submitted as an attachment through *Grants.gov*.	Form
☒ General Info- Tab 1 of HSIPR Project Budget and Schedule Form Excel Document	HSIPR FY 2009 FD/ Construction NOFA Section 3.3.1.2	This document to be submitted as an attachment through *Grants.gov*.	Form
☒ Detailed Capital Cost Budget- Tab 2 of HSIPR Project Budget and Schedule Form Excel Document	HSIPR FY 2009 FD/ Construction NOFA Section 3.3.1.2	This document to be submitted as an attachment through *Grants.gov*.	Form
☒ Annual Capital Cost Budget- Tab 3 of HSIPR Project Budget and Schedule Form Excel Document	HSIPR FY 2009 FD/ Construction NOFA Section 3.3.1.2	This document to be submitted as an attachment through *Grants.gov*.	Form
☒ Project Schedule- Tab 4 of Project Budget and Schedule Form Excel Document	HSIPR FY 2009 FD/ Construction NOFA Section 3.3.1.2	This document to be submitted as an attachment through *Grants.gov*.	Form
☒ OMB Standard Forms • SF 424: Application for Federal Assistance • SF 424C: Budget Information- Construction • SF 424D: Assurance Construction	HSIPR FY 2009 FD/ Construction NOFA Section 3.3.1.3	This document to be submitted as an attachment through *Grants.gov*.	Form
☒ FRA Assurances Document	HSIPR FY 2009 FD/ Construction NOFA Section 3.3.1.4	May be obtained from FRA's website at http://www.fra.dot.gov/downloads/admin/assurancesandcertifications.pdf. The document should be signed by an authorized certifying official for the applicant. Submit through *Grants.gov*.	Form

Optional Supporting Documents	Reference	Description	Format
☒ Map of proposed project area	HSIPR FY 2009 FD/ Construction NOFA Section 3.3.1.1	This document to be submitted as an attachment through Grants.gov.	None
☒ Other supporting documents as identified by applicant	HSIPR FY 2009 FD/ Construction NOFA Section 3.3.1.1	This document to be submitted as an attachment through Grants.gov.	None

PRA Public Protection Statement: Public reporting burden for this information collection is estimated to average 32 hours per response, including the time for reviewing instructions, searching existing data sources, gathering and maintaining the data needed, and completing and reviewing the collection of information. According to the Paperwork Reduction Act of 1995, a federal agency may not conduct or sponsor, and a person is not required to respond to, nor shall a person be subject to a penalty for failure to comply with, a collection of information unless it displays a currently valid OMB control number. The valid OMB control number for this information collection is **2130-0583**.

OMB Number: 4040-0004
Expiration Date: 01/31/2009

Application for Federal Assistance SF-424

Version 02

* 1. Type of Submission:	* 2. Type of Application:	* If Revision, select appropriate letter(s):
☐ Preapplication	☐ New	
☐ Application	☐ Continuation	* Other (Specify)
☐ Changed/Corrected Application	☐ Revision	

* 3. Date Received:	4. Applicant Identifier:
Completed by Grants.gov upon submission.	

5a. Federal Entity Identifier:	* 5b. Federal Award Identifier:

State Use Only:

6. Date Received by State:	7. State Application Identifier:

8. APPLICANT INFORMATION:

* a. Legal Name:

* b. Employer/Taxpayer Identification Number (EIN/TIN):	* c. Organizational DUNS:

d. Address:

* Street1:
Street2:
* City:
County:
* State:
Province:
* Country: USA: UNITED STATES
* Zip / Postal Code:

e. Organizational Unit:

Department Name:	Division Name:

f. Name and contact information of person to be contacted on matters involving this application:

Prefix: * First Name:
Middle Name:
* Last Name:
Suffix:

Title:

Organizational Affiliation:

* Telephone Number: Fax Number:

* Email:

Application for Federal Assistance SF-424

Version 02

9. Type of Applicant 1: Select Applicant Type:

Type of Applicant 2: Select Applicant Type:

Type of Applicant 3: Select Applicant Type:

* Other (specify):

*** 10. Name of Federal Agency:**

NGMS Agency

11. Catalog of Federal Domestic Assistance Number:

CFDA Title:

*** 12. Funding Opportunity Number:**

MBL-SF424FAMILY-ALLFORMS

* Title:

MBL-SF424Family-AllForms

13. Competition Identification Number:

Title:

14. Areas Affected by Project (Cities, Counties, States, etc.):

*** 15. Descriptive Title of Applicant's Project:**

Attach supporting documents as specified in agency instructions.

Add Attachments | Delete Attachments | View Attachments

Application for Federal Assistance SF-424 Version 02

16. Congressional Districts Of:

* a. Applicant * b. Program/Project

Attach an additional list of Program/Project Congressional Districts if needed.

Add Attachment | Delete Attachment | View Attachment

17. Proposed Project:

* a. Start Date: * b. End Date:

18. Estimated Funding ($):

* a. Federal
* b. Applicant
* c. State
* d. Local
* e. Other
* f. Program Income
* g. TOTAL

*** 19. Is Application Subject to Review By State Under Executive Order 12372 Process?**

☐ a. This application was made available to the State under the Executive Order 12372 Process for review on .

☐ b. Program is subject to E.O. 12372 but has not been selected by the State for review.

☐ c. Program is not covered by E.O. 12372.

*** 20. Is the Applicant Delinquent On Any Federal Debt? (If "Yes", provide explanation.)**

☐ Yes ☐ No Explanation

21. *By signing this application, I certify (1) to the statements contained in the list of certifications and (2) that the statements herein are true, complete and accurate to the best of my knowledge. I also provide the required assurances** and agree to comply with any resulting terms if I accept an award. I am aware that any false, fictitious, or fraudulent statements or claims may subject me to criminal, civil, or administrative penalties. (U.S. Code, Title 218, Section 1001)**

☐ **** I AGREE**

** The list of certifications and assurances, or an internet site where you may obtain this list, is contained in the announcement or agency specific instructions.

Authorized Representative:

Prefix: * First Name:

Middle Name:

* Last Name:

Suffix:

* Title:

* Telephone Number: Fax Number:

* Email:

* Signature of Authorized Representative: Completed by Grants.gov upon submission. * Date Signed: Completed by Grants.gov upon submission.

Application for Federal Assistance SF-424 Version 02

*** Applicant Federal Debt Delinquency Explanation**

The following field should contain an explanation if the Applicant organization is delinquent on any Federal Debt. Maximum number of characters that can be entered is 4,000. Try and avoid extra spaces and carriage returns to maximize the availability of space.

Exhibit B.3.1

Correspondence on Speed Restrictions

Wadsworth bridge documentation of impending speed restrictions.txt

From: Richard Hum [Richard_Hum@cpr.ca]
Sent: Wednesday, May 05, 2010 5:31 PM
To: Jim Jennings; bmoore@quandelconsultants.com
Subject: Wadsworth bridge documentation of impending speed restrictions

As discussed, below is the correspondence with Glyn Hughes, CP's Engineering

Service Area Manager, who expects a 30 mph slow order on the two bridges.

Richard

> _____
> From: Glyn Hughes
> Sent: Tuesday, April 27, 2010 2:28 PM
> To: Richard Hum
> Cc: Don Heron
> Subject: RE: Wadsworth bridges potential slow order
>
> Richard,
>
> I would anticipate a 30 MPH slow order some time next year if the
> bridges aren't done. This could drop down to 10 MPH if conditions
> deteriorate further. As it is now we are doing frequent inspections to
> stay on top of changing conditions. The replacement bridges will be
> good for 110MPH.
>
> Glyn
>
> _____
> From: Richard Hum
> Sent: Tuesday, April 27, 2010 2:49 PM
> To: Glyn Hughes
> Cc: Don Heron
> Subject: Wadsworth bridges potential slow order
>
> Glyn,
> What would you estimate the slow order speed (freight and
> passenger) to be if the two bridges at MP 46.78 and 47.27 were not
> replaced in the coming years? Also, would the new bridges be able to
> handle future passenger speed of up to 110 mph? Thanks
>
> Richard

Exhibit B.3.2

Bridge Inspection Reports

Inspection Report

Reading Values Allowed: 0-Not Applicable 1 - Very Good, 2 - Good, 3 - Fair, 4 - Poor, 5 - Very Poor, 9 - Needs immediate attention

Inspection: 2000698042
Description: C&M 46.78
Status: COMP ANNL
Sub Division: 30 C&M
Mileage: A04678
Date: 2010/04/19
Inspector: Keith Popp, Jorge Rueda

Comments:

```
Bad Bridge unchange condition
```

50131607 BRIDGE IL14 46.78

Measuring Point Name	Last changed	Reading	MP Text
Rip rap / Bank Stability	20070525	0002	
Channel condition	20070525	0002	
Scour	20070525	0002	
APPROACHES - Annual	20070525	0002	
High water level (to B/R)	20070525	XXXX	8'

.

50176995 DECK #1 IL14 46.78 CONCRETE BALLAST

Measuring Point Name	Last changed	Reading	MP Text
Rail Anchor Condition	20070525	0002	
Deck Drains	20070525	0002	
Walkway / Safety Features	20070525	XXXX	
Tie Condition	20070525	0002	
Rail / Connector	20070525	0002	#1 Jointed #2 Welded
Concrete Condition	20070525	0002	

.

50162432 SPAN #1 IL14 46.78 RC SPAN

Measuring Point Name	Last changed	Reading	MP Text
Reinforcement	20070525	0003	
Concrete Work	20070525	0003	

.

50163862 SPAN #2 IL14 46.78 RC SPAN

Measuring Point Name	Last changed	Reading	MP Text
Reinforcement	20070525	0003	
Concrete Work	20070525	0003	

.

50164651 SPAN #3 IL14 46.78 RC SPAN

Measuring Point Name	Last changed	Reading	MP Text
Reinforcement	20070525	0003	
Concrete Work	20070525	0005	Spalling REPLACE PARAPET WALL

.

50165139 SPAN #4 IL14 46.78 RC SPAN

Measuring Point Name	Last changed	Reading	MP Text
Reinforcement	20070525	0003	
Concrete Work	20070525	0005	Spalling REPLACE PARAPET WALL

.

50174353 ABUTMENT #1 IL14 46.78 CONCRETE ABUT

Measuring Point Name	Last changed	Reading	MP Text
Ballast Wall	20070525	0003	
Stem	20070525	0003	
Bridge Seats	20070525	0003	
Concrete	20070525	0003	
Movement/Displacement	20070525	0003	
Footings	20070525	0003	
Wingwall	20070525	0003	

.

50174354 ABUTMENT #2 IL14 46.78 CONCRETE ABUT

Measuring Point Name	Last changed	Reading	MP Text
Movement/Displacement	20070525	0003	
Footings	20070525	0003	
Wingwall	20070525	0003	
Ballast Wall	20070525	0003	
Stem	20070525	0003	
Bridge Seats	20070525	0003	
Concrete	20070525	0003	

.

50169393 PIER #1 IL14 46.78 CONCRETE PIER

Measuring Point Name	Last changed	Reading	MP Text
Concrete	20070525	0005	Spalling
Bearing Seats	20070525	0005	
Movement	20070525	0003	
Footings	20070525	0003	
Shaft	20070525	0005	REPLACE CENTER PIER

.

Recommendation List

Recommendation	Description	Due Date	Action Plan
002000590296	REPAIR TO BE MADE ON CENTER PIER	2011/05/11	
002000590295	REPAIR THE PARAPHET WALL	2011/05/11	

Inspection Report

Reading Values Allowed: 0-Not Applicable 1 - Very Good, 2 - Good, 3 - Fair, 4 - Poor, 5 - Very Poor, 9 - Needs immediate attention

Inspection: 2000698043
Description: C&M 47.27
Status: COMP ANNL
Sub Division: 30 C&M
Mileage: A04727
Date: 2010/04/19
Inspector: Keith Popp, Jorge Rueda

Comments:

```
Pier and cieling in bad shape
```

50146667 BRIDGE IL14 47.27

Measuring Point Name	Last changed	Reading	MP Text
Scour	20070525	0002	
APPROACHES - Annual	20070525	0002	
High water level (to B/R)	20070525	XXXX	5'
Rip rap / Bank Stability	20070525	0002	
Channel condition	20070525	0002	

.

50176996 DECK #1 IL14 47.27 CONCRETE BALLAST

Measuring Point Name	Last changed	Reading	MP Text
Tie Condition	20070525	0002	
Rail / Connector	20070525	0002	#1 & #2 Welded
Concrete Condition	20070525	0002	
Rail Anchor Condition	20070525	0002	
Deck Drains	20070525	0002	
Walkway / Safety Features	20070525	0002	

.

50163286 SPAN #12 IL14 47.27 RC SPAN

Measuring Point Name	Last changed	Reading	MP Text
Reinforcement	20070525	0003	
Concrete Work	20070525	0004	Spalling

.

50163221 SPAN #11 IL14 47.27 RC SPAN

Measuring Point Name	Last changed	Reading	MP Text
Reinforcement	20070525	0003	
Concrete Work	20070525	0003	

.

50163142 SPAN #10 IL14 47.27 RC SPAN

Measuring Point Name	Last changed	Reading	MP Text
Reinforcement	20070525	0003	
Concrete Work	20070525	0003	

.

50174355 ABUTMENT #1 IL14 47.27 CONCRETE ABUT

Measuring Point Name	Last changed	Reading	MP Text
Wingwall	20070525	0003	
Ballast Wall	20070525	0003	
Stem	20070525	0003	Tuck Point
Bridge Seats	20070525	0002	
Concrete	20070525	0003	
Movement/Displacement	20070525	0003	
Footings	20070525	0003	

.

50174356 ABUTMENT #2 IL14 47.27 CONCRETE ABUT

Measuring Point Name	Last changed	Reading	MP Text
Ballast Wall	20070525	0003	
Stem	20070525	0003	Tuck Point
Bridge Seats	20070525	0003	
Concrete	20070525	0003	
Movement/Displacement	20070525	0003	
Footings	20070525	0003	
Wingwall	20070525	0003	

.

Recommendation List

Recommendation	Description	Due Date	Action Plan
002000589592	JACKET PIERS WITH STONE ON PIERS	2011/05/11	

PHOTOGRAPHS FROM BRIDGE INSPECTION MP 46.78 C&M SUB 02-02-2009

View from the top of the Bridge good alignment

South side west end # 2 main track under structure floor large crack forming, no change from last years inspection

PHOTOGRAPHS FROM BRIDGE INSPECTION MP 46.78 C&M SUB 02-02-2009

West end floor ceiling spalling new delaminating of concrete note falling from ceiling and rebar showing dew to surface concrete decaying

The parapet wall is moving to the outside by 1 inch, this needs to be monitored every quarter to maintain safe load carrying, with the change in the weather due to thermal expansion and contraction.

PHOTOGRAPHS FROM BRIDGE INSPECTION MP 46.78 C&M SUB 02-02-2009

This is the major problem with the decaying concrete at the center pier north end of #1 main track, mainly the outside but working to the center. this will have to be supported or rejacket the pier to retain support for the floor for any length of time.

PHOTOGRAPHS FROM BRIDGE INSPECTION MP 47.27 C&M SUB 02-02-2009

Overall view of 47.27 6-span bridge - good alignment but retainer wall has been hit

PHOTOGRAPHS FROM BRIDGE INSPECTION MP 47.27 C&M SUB 02-02-2009

#2 main track south side which is stable but should be replaced.

Looking east all four pier and east abutment # 1 main track

PHOTOGRAPHS FROM BRIDGE INSPECTION MP 47.27 C&M SUB 02-02-2009

These pictures are from the south side west end piers 4 and 3 which have some deterioration at the outside edge of the piers

PHOTOGRAPHS FROM BRIDGE INSPECTION MP 47.27 C&M SUB 02-02-2009

These picture are of pier 1 and 2 north side # 1 main track which again shows remarkable supplementary deterioration of the pier ends. In these piers should be repaired by jacketing for more support.

Exhibit C.1.1

PROJECT SUMMARY AND MANAGEMENT APPROACH
CANADIAN PACIFIC C&M SUBDIVISION
WADSWORTH BRIDGE REPLACEMENTS, MP 46.78 AND 47.27

Project Overview

The project contemplates the replacement of two bridges at the end of their service life and located between Wadsworth, IL and the Illinois and Wisconsin State border. The bridges are located over tributaries to the Des Plains River just west of the track right-of-way. The bridge at MP 46.76 involves the replacement of two 45-foot spans with new ballasted deck plate girders and the reconstruction of two abutments. The bridge at MP 47.27 will be replaced with six new 40-foot spans, 2 new piers and reconstruction of two abutments. Both bridge designs will integrate recent safety standards by constructing walkways and handrails on two sides of the bridges.

The proposed installation work method will be conducted within Canadian Pacific's (CP) existing railway right of way and within the footprint of the existing bridges so as to avoid disturbance to the waterway and habitat. The location is double track and so installation of the bridge spans and renewal of the abutments will be performed one track at a time, with the adjacent track in service. This will enable passenger and freight train movements to continue with minimal interruption to service.

Project Management Plan

Project Management

This project will be managed jointly by the Illinois Department of Transportation (IDOT) and CP. IDOT will be responsible for project financial controls, funds disbursement, and ensuring that the project is federally compliant throughout all stages of the construction process. CP will be responsible for all elements of design, procurement, contracting, construction, oversight, inspection, and project controls. A CP Project Manager (PM) will be responsible for project oversight and management. The PM will be tasked with ensuring that all necessary environmental permitting has been obtained, that safety and requirements are adhered to, and the scope of work is completed on-time and on-budget. Tendering of contract services and coordination between CP departments will also be the role of the CP PM.

CP will hold internal progress meetings throughout the course of the project, and will document project progress, new risks or issues that could potentially impact the project schedule or the project budget, and the strategies for addressing or mitigating these risks. The CP PM will also update and distribute the project schedule. Copies of minutes from the progress meetings shall be made available to IDOT upon IDOT's request.

CP accounting will submit invoices for progress payments directly to the IDOT PM, subject to the terms and regulations of the IDOT-CP project agreement. Invoicing and accounting forms and methods shall be consistent with FRA and IDOT processes and procedures.

Design and Construction Management

The CP PM will coordinate bridge construction with each of the Structures, Signals, Track, and Contract Supervisors who will perform their work using CP unionized labor forces and contracted construction services. Planning of track outages and reduction of freight traffic during construction will be handled through CP's Product Design department and coordinated with the PM. CP Accounting will ensure Funding Program reporting requirements are fulfilled and project costs are captured and recovered.

The CP PM will be responsible for each of the supervisors shown in Figure 1. Supervisors will be onsite to ensure work is carried out according to plans.

Figure 1 – Project Organization Chart

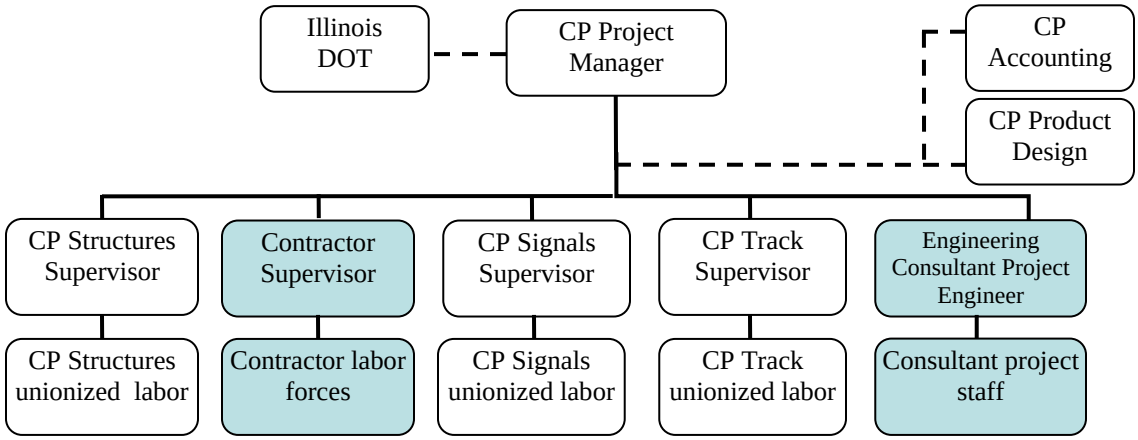

Construction inspection will be performed by CP's in-house inspectors. Materials testing, which will be contracted through a materials testing company, will be in accordance with AREMA and ASTM guidance and specifications. CP applies a hierarchy of approval for change orders based on the dollar amount of the change. CP has agreed to cover all cost overruns.

Risk Management

CP projects are planned and managed in recognition of inherent onsite construction and environmental risks. The PM for this project has identified the risks in the following table, and will address these concerns with appropriate mitigating actions.

RISKS	MITIGATION
CONSTRUCTION	
Quality control	Bridge engineer to review drawings to meet CP bridge design specifications. Onsite inspection by construction supervisors to ensure construction is built to design.
Cost over-expenditure	PM and Site Supervisors to oversee tendering of contract services and manage charges billed to the project. Project costs and accounting will be tracked using real-time accounting systems. Previous experiences with other bridge projects provide confidence of cost estimates.
Service delays to passenger and freight customers	Retain operation of one track while the other track is closed for construction. Reduction of freight traffic during construction. Coordination of simultaneous outages at other locations along the corridor. Communicate in advance to Amtrak, working through CP Work Block Planning Manager
Safety during construction	Ensure employees and contractors are qualified to work on railway property. Compliance with CP 'On Track Safety' and 'Minimum Safety Requirements for Contractors Working on Railway Property' procedures
Timely project completion	Schedule bridge installation activities during suitable weather, temperature, and low water flow periods. Schedule sufficient track outage duration to complete installation. Previous experience with other bridge projects provide confidence with construction timelines.
SYSTEM SAFETY	
Fall protection	New bridges designed with walkway and handrails
Derailment hazard plan	Installation of Jordan guard rails, to reduce risk of cars leaving track during a derailment
ENVIRONMENTAL	
Impact to waterway	Time the work to meet any necessary environmental requirements. Perform construction activities from the track and on existing embankment where possible. Apply soil erosion and sediment control measures during construction. Use of clean fill and proper disposal of material from worksite.
Impact to habitat	Avoid wetland areas for construction activities

Financial Plan

Source and use of capital funds

Partnering Agency	Funding Source	Funds Available ($)	Funds Secured ($)	Funds Requested ($)
Federal Railroad Administration	FY 2009 DOT Appropriations Act	65,000,000		3,711,576
Illinois Dept. of Transportation	-	-	-	-
Canadian Pacific (Soo Line RR)	2010 Capital Expenditure Program	700,000,000	3,711,576	-

Total Project Cost Estimate: $7,423,152.00

The work associated with this project will be phased so as to match the availability of funds from the FRA. At this time, IDOT has indicated it will submit an application to the FRA, for a total of $7,423,152 US to pay for the work contemplated. The work cannot begin until the funding from the FRA is obligated. Any and all costs in excess of the estimate will be borne solely by Canadian Pacific. IDOT will reimburse Canadian Pacific the amount of $3,711,576 US for the completion of the work. The cost estimate and allocation of these funds are shown in the table below. The specific terms of the agreement are described in the draft IDOT-CP agreement in Exhibit E.2.1.

Cost Estimate and Allocation

Cost Categories	Subtotal
1- Administrative and legal expense	-
2- Land, structures, rights-of-ways, and appraisals	-
3- Relocation expenses and payments	**$ 23,693**
4- Architectural and engineering fees	**$ 88,850**
5- Project inspection fees	**$ 98,327**
6- Site work	-
7- Demolition and removal	**$ 207,317**
8- Construction labor	**$ 1,166,188**
9- Materials	**$ 135,645**
10- Equipment	**$ 50,941**
11- Misc. (purchase of contract services, other etc.)	**$ 4,845,039**
12- Contingencies at 10%	**$ 661,600**
13- Annual inflation at 2% for 2011 construction	**$ 145,552**
Total Cost:	**$ 7,423,152**
Funding Sources	

CP contribution:	**$ 3,711,576**
FRA contribution:	**$ 3,711,576**
Total Contribution:	**$ 7,423,152**

[1] All costs in excess of this will be borne by the COMPANY.

Potential financial risks

The primary risk with any type of contracted construction work is the risk of cost over-expenditure typically due to shortfalls in planning, design, estimating and oversight. The Project and Financial Management Plans in this document will help mitigate the sources of these potential risks. The CP PM has identified risk and mitigation strategies associated with cost-over expenditures in the table above.

Project Safety and Overall Operation Safety

CP is committed to being the safest railroad in North America. CP will ensure employees and contractors are safely protected from train operations during construction and all work is conducted in a safe manner. For CP employees and contractors, safety is governed by CP's 'On Track Safety' procedures which meet or exceed FRA regulations for roadway worker protection. In addition, contractors working on CP property must comply with CP's 'Minimum Safety Requirements for Contractors Working on Railway Property' procedures.

A copy of the CP's 'On Track Safety' and 'Minimum Safety Requirements for Contractors Working on Railway Property' procedures are included in the application as additional information.

ON TRACK SAFETY

RULES AND PROCEDURES

CANADIAN PACIFIC RAILWAY

ST PAUL SERVICE AREA
CHICAGO SERVICE AREA

APRIL 1, 2007

Form 0181 (03-07)

TABLE OF CONTENTS

ON TRACK SAFETY GLOSSARY 1
20.0 ON-TRACK SAFETY RULES AND PROCEDURES 3
20.1 TRAINING AND QUALIFICATIONS 3
20.1.1 CONTRACTORS 3
20.2 RULES AND INSTRUCTIONS 3
20.2.1 NOTICE OF NEW TIMETABLE 3
20.2.2 CHANGE OF A RULE, GENERAL ORDER, OR SPECIAL INSTRUCTION 3
21.0 ON TRACK SAFETY PROCEDURES 4
21.1 OCCUPYING OR FOULING CONTROLLED TRACKS 4
21.1.1 REQUESTING ON TRACK SAFETY PROTECTION 4
21.1.2 AUTHORITIES 4
21.1.3 WORKING LIMITS 5
21.1.4 TYPES OF EXCLUSIVE TRACK OCCUPANCY ON CONTROLLED TRACKS 6
21.1.5 FOUL TIME 7
21.1.6 RAILROAD CROSSINGS AT GRADE 7
21.1.7 VERBAL PROTECTION – CONTROL POINT OR MANUAL INTERLOCKING 9
21.2 OCCUPYING OR FOULING NON-CONTROLLED TRACKS 10
21.2.1 TYPES OF ON TRACK SAFETY FOR NON-CONTROLLED TRACKS 10
21.3 LOOKOUTS 13
21.3.1 LOOKOUT SIGNALS TO WARN EMPLOYEES 14
21.4 INDIVIDUAL TRAIN DETECTION (ITD) 14
21.5 EMERGENCY FLAGGING 15
22.0 TEMPORARY TRACK CONDITIONS 16
22.1 TEMPORARY RESTRICTIONS 16
22.2 DISPLAY OF YELLOW TRACK FLAG 17
22.3 DISPLAY OF YELLOW-RED TRACK FLAG 18
22.4 DISPLAY OF GREEN TRACK FLAG 18
22.5 DISPLAY OF RED TRACK FLAG 19
22.6 TRACK FLAG LOCATION 19
22.7 BLUE SIGNAL DISPLAYED 19
23.0 ON-TRACK EQUIPMENT SAFETY PROCEDURES 20
23.1 QUALIFIED OPERATORS 20
23.2 USE OF ON-TRACK EQUIPMENT 20
23.2.1 UNDERSTANDING 20
23.2.2 RIDING ON TRACK EQUIPMENT 20
23.2.3 LIGHTS DISPLAYED 21
23.2.4 ROAD CROSSINGS 21
23.2.5 FLAGGING EQUIPMENT 21
23.2.6 TRANSPORTING TOOLS AND MATERIAL 21
23.2.7 GUIDE WHEELS FOR RAIL OPERATION 22
23.2.7 GUIDE WHEELS FOR RAIL OPERATION 22
23.2.8 UNATTENDED ON-TRACK EQUIPMENT 22
23.2.9 TOWING WITH ON-TRACK ROADWAY MAINTENANCE MACHINES OR HI-RAIL 24
23.2.10 IN SERVICE FAILURE OF PRIMARY BRAKING SYSTEM 24
23.3 MOVEMENT OF ON-TRACK EQUIPMENT 25
23.3.1 MAXIMUM AUTHORIZED SPEEDS FOR ON TRACK EQUIPMENT 25
23.3.2 MOVEMENT WITHIN OR THROUGH WORKING LIMITS 25
23.3.3 RAILROAD CROSSINGS, DRAWBRIDGES, POWER SWITCHES, AND TRACK 26
SIDE WARNING DETECTORS. 26
23.3.4 MOVEMENT THROUGH SPRING OPERATED DEVICES. 26
23.4 STOPPING DISTANCE AND MAINTAINING SAFE BRAKING DISTANCE 26
23.5 RADIO REQUIREMENT FOR ROADWAY WORKERS 27
24.0 TRAIN SPEED CALCULATION TIMES 28

25.0 SWITCHES 29
25.1 MAIN TRACK SWITCHES 29
25.1.1 SPRING SWITCH(ES) 29
25.1.2 DUAL CONTROL SWITCHES 29
25.1.3 ELECTRICALLY LOCKED SWITCHES AND DERAILS 29
25.2 PROTECTION DURING REPAIRS 29
25.3 SECURING MAIN TRACK SWITCHES 29
25.4 HANDLING OF SWITCHES FOR TRAIN MOVEMENTS 30
26.0 UNUSUAL CONDITIONS 31
26.1 PRECAUTONS ACCOUNT UNUSUAL CONDITIONS 31
26.1.1 PROTECTION AGAINST DEFECTS 31
27.0 AUTOMATIC CROSSING WARNING DEVICES 32
27.1 CHANGING RAIL AT CROSSINGS EQUIPPED WITH WARNING DEVICES 32
27.2 WORKING ON OR NEAR CROSSINGS WITH AUTOMATIC CROSSING WARNING DEVICES 32
28.0 OCCUPIED OUTFIT CARS 34
28.1 PLACEMENT OF OCCUPIED OUTFIT CARS 34
28.2 MOVEMENT OF OCCUPIED OUTFIT CARS 34
29.0 RESPONSIBILITIES OF ROADWAY WORKERS 35
29.1 ALL ROADWAY WORKERS (GENERAL) 35
29.2 ROADWAY WORKER (EMPLOYEES) 36
29.2 ROADWAY WORKER (EMPLOYEES) 36
29.3 EMPLOYEE IN CHARGE 38
29.4 EMPLOYEE RESPONSIBLE FOR ON TRACK PROTECTION 39
29.4 EMPLOYEE RESPONSIBLE FOR ON TRACK PROTECTION 39
29.5 RESPONSIBILITIES OF LOOKOUTS 39
29.6 RESPONSIBILITIES OF LONE WORKER 40
29.7 RESPONSIBILITIES OF MAINTENANCE MACHINE OPERATORS 40
30.0 JOB BRIEFING 41
30.1 CONDUCTING A JOB BRIEFING 41
31.0 RIGHT TO CHALLENGE ON TRACK SAFTEY 42
31.1 RESPONSIBILITIES OF CANADIAN PACIFIC RAILWAY 42
31.2 RESPONSIBILITIES OF THE ROADWAY WORKER 42
31.3 RESOLVING CHALLENGES TO ON TRACK SAFETY PROCEDURES 42
32.0 RIGHT TO CHALLENGE ROADWAY MAINTENANCE MACHINE SAFETY 44
32.1 RESPONSIBILITIES OF CANADIAN PACIFIC RAILWAY 44
32.2 RESPONSIBILITIES OF EACH ROADWAY WORKER 44
32.3 RESOLVING CHALLENGES TO ROADWAY MAINTENANCE MACHINE SAFETY 44
40.0 GENERAL CODE OF OPERATING RULES (GCOR) 45
APPENDIX A - REQUIRED SIGHT DISTANCE CHART 50
APPENDIX B – TYPES OF PROTECTION 51

ON TRACK SAFETY GLOSSARY

Below are terms that will be used throughout the On Track Safety Manual in addition to those glossary terms within the General Code of Operating Rules.

ADJACENT TRACK
Two or more tracks with track centers spaced less than 25 feet apart.

CONTROLLED TRACKS
Main tracks and controlled sidings under the control of a train dispatcher or control operator. This includes any track where a block signal system is in effect.

EFFECTIVE LOCKING DEVICE
A device designed to be applied, secured and uniquely tagged which may only be removed by the class, craft, or group of employees that placed it.

EXCLUSIVE TRACK OCCUPANCY (ETO)
A method of establishing working limits on controlled track in which movement authority for trains and other equipment is withheld by the train dispatcher or control operator or restricted by flagmen.

FOUL TIME
Method of establishing working limits on controlled track through a train dispatcher or control operator over a specific segment of controlled track in which authority for trains and other equipment will be withheld.

FOULING
Location of an individual or equipment that could be struck by a moving train or equipment when they are so located within four feet of a track.

INDIVIDUAL TRAIN DETECTION (ITD)
A procedure used by a lone worker when protection or working limits are not established.

LONE WORKER
An individual roadway worker who is not being afforded on-track safety by another roadway worker, who is not a member of a roadway work group, and who is not engaged in a common task with another roadway worker.

LOOKOUT
An employee who is qualified to provide warning to roadway workers of approaching trains or on-track equipment.

NON-CONTROLLED TRACKS
Tracks which movements are permitted without receiving authorization from train dispatcher or control operator.

ON-TRACK SAFETY
A state of freedom from the danger of being struck by a moving train or equipment, provided by operating and safety rules that govern track occupancy by personnel, trains and on-track equipment.

ON-TRACK EQUIPMENT
Term used for equipment that occupies a track or fouls a track. On-track equipment may be identified by "TC" followed by unit number in the address on track warrants, track bulletins, track and time or track permits when used. See Roadway Maintenance Machines and Track Cars.

ROADWAY WORK GROUP
Two or more roadway workers organized to work together on a common task.

ROADWAY WORKER
Any employee of a railroad, or of a contractor to a railroad, whose duties include and who is engaged in the inspection, construction, maintenance or repair of railroad track, bridges, roadway, signal and communication systems, roadway facilities, or roadway machinery on or near the track or with the potential of fouling a track.

ROADWAY MAINTENANCE MACHINE
A device powered by any means of energy other then hand power which is being used on or near railroad track for maintenance, repair, construction, or inspection of track, bridges, roadway, signal, communications, or electric traction systems. Roadway maintenance machines may have road or rail wheels or may be stationary.

TRACK CAR
Any track vehicle that can be removed readily from the track.

WORKING LIMITS
A segment of track within definite boundaries which train and engines may move only as authorized by employee in charge. Working limits may be established on controlled or non-controlled track.

20.0 ON-TRACK SAFETY RULES AND PROCEDURES

20.1 TRAINING AND QUALIFICATIONS

All roadway workers will receive On-Track Safety training at least once every calendar year. In addition to the training, lookouts, flagmen, lone workers and machine operators will be qualified with On Track Safety procedures specific to their positions.

Employees who are required to be rules qualified to provide protection or warning for themselves or others must be trained and qualified at least once every calendar year.

20.1.1 CONTRACTORS

Contractors employed by the railroad to perform work foul of any track; will be subject to the On Track Safety awareness procedures as outlined under Rule 29.1 (Roadway Workers General). This training can occur at the work site in the form of a Job Briefing.

Contractors will not be allowed to foul a track unless:

- They have been properly trained on the On Track Safety awareness procedures,
- A railroad employee who is qualified to provide protection is present at the work site.

20.2 RULES AND INSTRUCTIONS

Employees governed by On-Track Safety Rules, General Code of Operating Rules, Timetable and Special Instructions shall have current copy available they can refer to while on duty and made available to all employees.

A copy of the On-Track Safety Rules, General Code of Operating Rules, Timetable and Special Instructions in large maintenance gangs shall be located on the lead and rear machines, unless employee in charge advises a different location within the gang.

20.2.1 NOTICE OF NEW TIMETABLE

Engineering Department employees will be notified of new timetables or supplements by either general order or proper authority.

20.2.2 CHANGE OF A RULE, GENERAL ORDER, OR SPECIAL INSTRUCTION

Track bulletins and general orders covering work or other conditions must be cancelled when conditions are remedied.

When speed restrictions are requested for issuance on general order, speed signs must be displayed before the restriction can be shown on general order.

Modifications to rules or special instructions will be shown on "A" General Orders which maintenance of way employees will be responsible for and have current copy available for reference, while on duty.

21.0 ON TRACK SAFETY PROCEDURES

On Track Safety must be provided at all times to those employees who may occupy or foul a track to perform maintenance, inspection or repair. An employee or roadway machinery is considered to be fouling a track when they are within four feet of the nearest rail.

21.1 OCCUPYING OR FOULING CONTROLLED TRACKS

Before occupying or fouling a controlled track, procedures for on track safety is required when:

- On-track equipment is on or fouling the track.
- Using off-track equipment fouling the track.
  or
- Work is performed on or fouling the track.

EXCEPTION: A lone worker or employees using a lookout may perform routine inspection or minor work as outlined under Rule 21.3 (Lookout) or Rule 21.4 (Lone Worker).

21.1.1 REQUESTING ON TRACK SAFETY PROTECTION

The employee requesting on track safety protection, must inform the train dispatcher or control operator the limits and time needed and where the main track will be entered. In addition, employees must ascertain if any track bulletin Form B or track bulletin removing a track from service are in effect within the territory that they will be fouling. Employees and equipment must not enter the main track at any other point, unless otherwise authorized.

The employee in charge must make sure that equipment or employees, do not occupy or foul the track until on track safety protection is provided.

21.1.2 AUTHORITIES

A. JOINT AUTHORITIES

When Employees are issued joint authorities with others, no employee or movement may enter that joint authority until a job briefing is held between all employees affected to establish an Employee in Charge and working limits within joint authorities.

B. SINGLE AUTHORITY

When one employee has the authority to occupy or foul a main track under exclusive track occupancy, that employee may permit other employees to enter and use their authority or protection. Before permission is given to other employees to enter, the Employee in Charge will hold a job briefing with all employees affected.

21.1.3 WORKING LIMITS

This is a segment of track on controlled or non-controlled track within definite boundaries which must be clearly identifiable to all movements and movements may only enter or pass through when authorized by the Employee in Charge. Only one Employee in Charge will have control over working limits and will be responsible for those that they permit into their working limits.

Employees will record the following information on the Working Limits form as it applies.

- Name or Other ID granted permission to enter working limits.
- Name of Employee in Charge of working limits.
- Location of working limits.
- Time Authorized.
- Time Cleared.

Working limits maybe established by a:

- Track Bulletin Form B
- Track Bulletin removing a track from service.
- Flagman with instructions and capability to hold all movements clear of working limits.
- Verbal protection within a manual interlocking or control point.
- Absolute signals displaying a “STOP” indication.
  or
- Physical locations that are clearly identifiable, such as
  - Mile Post locations.
  - Station signs.
  - Switch locations.
  - Trackside Warning Detectors.
    - or
  - Other signs that are identified in the field.

When a red flag is used to denote working limits the location must be given using one of the above physical locations as a reference.

21.1.4 TYPES OF EXCLUSIVE TRACK OCCUPANCY ON CONTROLLED TRACKS

A. CTC TERRITORY

Track and Time per GCOR Rule 10.3
Form B Track Bulletin per GCOR Rule 15.2
Track Bulletin removing track from service per GCOR Rule 15.4
Foul Time per On-Track Safety Rule 21.1.5
Lookout per On-Track Safety Rule 21.3
Lone Worker per On-Track Safety Rule 21.4
Verbal Protection by Absolute Signals Rule 9.5.3
Control Point placed under local control with permission of the control operator
Note: When placed under local control Absolute signals must be displaying STOP.

B. MANUAL INTERLOCKINGS

Foul Time per On-Track Safety Rule 21.1.5
Lookout per On-Track Safety Rule 21.3
Verbal Protection by Absolute Signals Rule 9.5.3
Track Bulletin removing track from service per GCOR Rule 15.4**.**

C. ABS TERRITORY

Track Permit per GCOR Rule 9.15
Track Warrant per GCOR Rule 14.5
Form B Track Bulletin per GCOR Rule 15.2
Track Bulletin removing track from service per GCOR Rule 15.4
Foul Time per On-Track Safety Rule 21.1.5
Lookout per On-Track Safety Rule 21.3
Lone Worker per On-Track Safety Rule 21.4

D. NON-SIGNALLED TERRITORY

Track Warrant per GCOR Rule 14.5
Form B Track Bulletin per GCOR Rule 15.2
Track Bulletin removing track from service per GCOR Rule 15.4
Block Register Territory per GCOR Rule 6.15
Foul Time per On-Track Safety Rule 21.1.5
Lookout per On-Track Safety Rule 21.3
Lone Worker per On-Track Safety Rule 21.4

E. AUTOMATIC INTERLOCKINGS

Lookout per On-Track Safety Rule 21.3
Lone Worker per On-Track Safety Rule 21.4
Maintenance of Way Lock Out Box per On-Track Safety Rule 21.1.6(C)

21.1.5 FOUL TIME

Working limits established on controlled track through use of Foul Time for Engineering Services will be considered exclusive track occupancy and employee receiving will copy and repeat the information received back to the train dispatcher or control operator before it becomes effective.

Before train dispatcher or control operator may grant foul time, all trains must be clear of that segment of track and other movements withheld by train dispatcher, unless permission is received from employee in charge.

Employees or on-track equipment may foul the track and authorize others to foul the track within the working limits established only upon permission of the employee in charge. The Working Limits form will be filled out accordingly when granting others to enter the work area.

Foul time is in effect until released by the requesting employee.

21.1.6 RAILROAD CROSSINGS AT GRADE

A. RAILROAD CROSSINGS PROTECTED BY STOP SIGNS OR GATES

On track equipment must stop and verify that the route is clear before passing over railroad crossings at grade, unless the crossing is protected by gates that are set against the other route.

B. MANUAL INTERLOCKINGS

When on-track equipment will make a movement through a manual interlocking without stopping or performing work they will:

- Receive permission from the control operator before occupying the limits of a manual interlocking.
- Be governed by control operator's instructions for movement within the interlocking limits.
- Notify control operator when movement is clear of the interlocking limits.

When movement may be required to stop or perform work within a manual interlocking on track safety protection must be provided.

21.1.6 RAILROAD CROSSINGS AT GRADE --- continued

C. AUTOMATIC INTERLOCKINGS

1. EQUIPPED WITH MAINTENANCE OF WAY LOCK OUT BOXES

Where maintenance of way LOCK OUT boxes are provided employees must always operate the LOCK OUT mechanism before entering interlocking limits and follow the instructions inside the box to perform work or for groups of on track equipment moves. Once the LOCK OUT is operated it must not be restored to normal position until the movement or workers are clear of the interlocking limits.

Location of Maintenance of Way lock out boxes will be designated in timetable special instructions in the stations column by the letter “M” and marked on signal bungalow as "MW LOCK OUT BOX."

Single on track equipment that does not shunt the track may operate through an automatic interlocking without operating the Lock Out box provided that:

- Movement stops before entering the interlocking limits.
- Conflicting routes can be seen for a distance of one mile for approaching movements.
- Movement is not made in front of approaching movements in sight distance.
- Movement does not stop within the interlocking limits.

Single on track equipment that shunts the track may operate through an automatic interlocking without operating the Lock Out box provided that:

- Absolute signal displays a proceed indication.
- Movement Stops at the Absolute signal.
- Signal continues to display a proceed indication.

Lock out boxes must be used if movement stops within interlocking limits, work is to be performed within the interlocking limits or for other movements involving more than one piece of on track equipment.

2. NOT EQUIPPED WITH MAINTENANCE OF WAY LOCK OUT BOXES

On-track equipment that does not shunt the track must:

- Stop before entering interlocking limits.
- Look in both directions to ensure a safe movement can be made across the conflicting route.

On-track equipment that shunts the track will be governed as follows:

A. Automatic Interlocking Signal Displays a Proceed Indication

When a signal at an automatic interlocking displays a proceed indication, on-track equipment that shunts the track must:

- Stop at the Absolute signal.
- If signal continues to display a proceed indication, proceed as the way is seen to be clear.

21.1.6 RAILROAD CROSSINGS AT GRADE --- continued

B. Automatic Interlocking Signal Displays a Stop Aspect

When a signal at an automatic interlocking displays a red aspect or is dark, on-track equipment that shunts the track must:

- Stop at the Absolute signal.
- Remain stopped while a qualified employee operates the time release per instructions posted in the release box.
- If signal displays a proceed indication, on-track equipment may proceed through the interlocking limits.
- If after operating the time release, signal does not indicate a proceed indication, on-track equipment must not proceed until an employee ensures that no movements are approaching and a proceed hand signal is received.

NOTE: If a signal displaying a proceed indication changes to an indication requiring movement to Stop, stop at once. When more than one piece of on-track equipment shunts the track and will be required to move through an automatic interlocking, each piece must apply this rule separately, except when the use of a LOCK BOX is used.

3. WORKING WITHIN AUTOMATIC INTERLOCKING LIMITS

On track safety must be provided by one of the following:

- Operate maintenance of way LOCK BOX, if interlocking is so equipped, and follow the instructions inside the box.

  or
- Obtain protection within the interlocking from a signal maintainer who will ensure that all conflicting routes display a Stop indication.

Routine inspection or minor work may be done by:

- Lookout per On-Track Safety Rule 21.3

  or
- Lone Worker per On-Track Safety Rule 21.4

21.1.7 VERBAL PROTECTION – CONTROL POINT OR MANUAL INTERLOCKING

When Working Limits are established in line with GCOR Rule 9.5.3 through verbal protection, it may only occur within a controlled point or manual interlocking and shall comply with the following requirements:

1. Verbal protection will be communicated to the employee in charge by the train dispatcher or control operator only after they have withheld authority to all trains to move into or within the limits to be protected.

2. Employee in charge receiving verbal protection will repeat the track, track limits and time limits of the verbal protection for verification before verbal protection becomes effective.

3. No movements may be made into or within the working limits established until permission is received from the employee in charge and authority has been given by the train dispatcher.

21.2 OCCUPYING OR FOULING NON-CONTROLLED TRACKS

Before occupying or fouling non-controlled tracks, protection is required when:

- On-track equipment is on or fouling the track.
- Using off-track equipment fouling the track.
  or
- Work is performed on or fouling the track.

EXCEPTION: A lone worker or employees using a lookout may perform routine inspection or minor work as outlined under Rule 21.3 (Lookout) or Rule 21.4 (Lone Worker).

Note: Equipment not performing maintenance may move on a non-controlled track as prescribed by GCOR Rule 6.28 (Movement on Other Than Main Track)

21.2.1 TYPES OF ON TRACK SAFETY FOR NON-CONTROLLED TRACKS

One of these six methods or a combination of these methods must be used to establish working limits on non-controlled tracks.

1. Each manually operated switch that provides direct access must be lined against movement
onto the track. Each switch lined must be secured by one of the following methods:

a. A spike so that it cannot be removed unless proper tool is used.

b. Clamped and secured with effective locking device

or

c. Switch stand locked with effective locking device.

In addition, each switch must be properly tagged.

2. A derail capable of restricting access to the track where work will occur must be locked in derailing position and secured by one of the following methods.

a. A spike so that it cannot be removed unless proper tool is used.

or

b. Locked with effective locking device.

In addition, a red flag will be placed by each derail and securing device must be properly tagged.

Derails and red flags will be positioned a minimum of 50 feet from work location, whenever practicable.

21.2.1 TYPES OF ON TRACK SAFETY FOR NON-CONTROLLED TRACKS --- cont'd

3. Where remote control switches are operated by a control operator or other designated employee, an employee must request protection for the work required. The employee in charge of the switch must:

- Line remote control switches against movement to affected track.
- Apply a locking and blocking device to the control machine to prevent movement onto the affected track.
- Notify the employee when protection is provided.
- Not remove the locking devices unless the employee states that is safe to do so.

NOTE: Employee requesting may also use clamp on switch points and tag it after advised that switch is locked.

Where remote control switches in a hump yard, are operated by a control operator or other designated employee, an employee must request protection for all affected track(s) where work is required in accordance with General Code of Operating Rules 7.13 (Protection of Employees in Bowl Tracks).

Once protection is provided by control operator or other designated employee and acknowledged by employee requesting, employee requesting will:

- Repeat back what protection is provided.
- At St. Paul Hump Yard facility, remove power from air switches per timetable special instructions.
- At Bensenville Hump Yard facility, remove power from electric switches by raising lid on switch machine and rotate switch to off position.
- Assure switches are lined away from affected track(s) and apply clamp to switch point securing with an effective locking device and tag switch out of service.

When Hump Yardmaster is not on duty permission must be obtained from General Yardmaster on duty, then switches must be positioned, clamped, and locked with an effective locking device to prevent train movement to affected class tracks from crest or escape track.

4. By use of flagman with instructions and capability to hold all trains and equipment from entering the working limits.

5. A length of rail removed that would restrict access into the working limits, when so protected, a red flag must be placed a minimum of 25 feet in front of where rail was removed.

21.2.1 TYPES OF ON TRACK SAFETY FOR NON-CONTROLLED TRACKS --- cont'd

6. Exclusive track occupancy on a controlled track that establishes working limits that connects directly with the non-controlled track may be used to provide the necessary protection on non-controlled track. Before releasing the exclusive track occupancy, work on the non-controlled track must be completed; employees and equipment clear of the track unless another form of on track safety is provided.

If an engine or engines are working on the non-controlled track within the area of the exclusive track occupancy then the procedures for other protection of non-controlled track must be complied with.

If an unattended engine(s) is located within the non-controlled track area, that equipment must be tagged with an Out of Service tag, signed by the employee in charge and if necessary, instructions to the operator of such equipment. This must be attached to the throttle or control stand of such equipment so that it will be clearly seen by the engineer or employee controlling the engine. Instructions should indicate that engine must not be moved until the employee in charge is contacted for further instructions before moving.

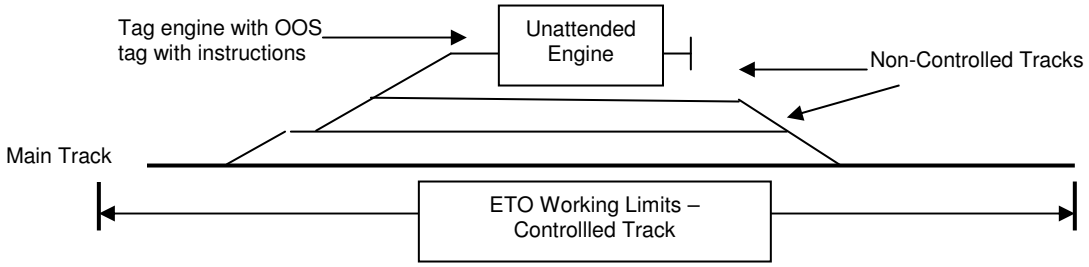

When cars are left standing on the track where work is to be performed, employee will check cars to determine that cars are properly secured before starting work. If not sure if cars are properly secured, the necessary protection as outlined in items 1, 2 or 5 between work area and cars left standing will be used.

21.3 LOOKOUTS

Lookouts must be trained, qualified, equipped and designated by the employee in charge.

When visibility is limited by weather or any other reason, other forms of On-Track Safety procedures should be used.

Where employees may have trouble hearing the Lookout's warning it may be necessary to assign
additional Lookouts.

Lookouts must devote their entire attention to detecting approaching trains and warning the roadway workers. They must not be assigned other duties while functioning as a lookout.

Lookouts must remain at their lookout position until the Employee in Charge determines that protection is no longer necessary or they are relieved by another lookout. A lookout should not foul tracks unless necessary in the performance of their duties.

A Lookout may be used to provide warning when:

- Work will not affect the movement of trains.
- Machinery is readily removable from the track (such as welding equipment, hand tampers, air bolt machines, etc.). Cannot be used for equipment fouling or occupying the track.
- Employees can be warned to be in the place of safety 15 seconds before arrival of a train moving at maximum authorized timetable speed reaches the point of work.

NOTE: Lookout may need to give additional warnings around noisy operations.

In order to determine the proper site distance needed refer to Appendix A to calculate the distance to be in place of safety 15 seconds before arrival of a train.

EMPLOYEES WHO DEPEND ON A LOOKOUT FOR ON-TRACK SAFETY MUST ALWAYS REMAIN IN A POSITION THAT ALLOWS THEM TO RECEIVE A WARNING WHEN COMMUNICATED BY THE LOOKOUT.

21.3.1 LOOKOUT SIGNALS TO WARN EMPLOYEES

Lookouts must have the appropriate equipment to perform their duties. The appropriate equipment is defined as the capability to warn employees through the use of an audible (whistle/horn) and visual device (white disc/white light), when required.

Give signal to warn employees of an approaching train as follows:

- Sound a warning whistle or horn.
- Hold the white disc at arms length above head.
- Then hold white disc horizontally at arm's length, toward the place designated in the Job Briefing where employees are to go to clear the tracks.

Give signal to employees when it is safe to resume work as follows:

- Hold the white disc horizontally at arm's length toward the work site.

NOTE: A lookout assigned to protect only one employee who is performing work where advance lookout(s) are not required does not need to be equipped with a visual device if they are within 25 feet of that individual, but must have the audible warning device.

21.4 INDIVIDUAL TRAIN DETECTION (ITD)

A Lone Worker may perform routine inspection or minor work when:

- The work will not affect the movement of trains.
- The Lone Worker can visually detect the approach of trains or equipment at maximum authorized timetable speed and can occupy the place of safety 15 seconds before its arrival.
- Power operated tools or roadway maintenance machines are not in use within hearing distance.
- The ability to hear and see approaching trains and other on-track equipment is not impaired by background noise, lights, inclement weather, passing trains, or other physical conditions.
- The work is performed outside the limits of a manual interlocking, control point or remotely controlled hump yard facility.
- Must identify a place of safety prior to occupying or fouling the track. Place of safety must not be another track unless working limits have been established on that track.
- Statement of On Track Safety form must be filled out and carried with them.

Refer to Appendix A for the required site distance needed to identify the minimum required sight distance that must be observed with the maximum authorized timetable speed for the territory.

21.5 EMERGENCY FLAGGING

Emergency Flagging procedures outlined under this rule should be used when a situation arises and the uses of track flags are not available or impracticable for use.

When a track is impassable or unsafe for trains at maximum authorized speed, protection in both directions must be immediately provided. Train Dispatcher must be contacted and advised to provide protection to the area deemed impassable or unsafe.

If the Train Dispatcher cannot be contacted or cannot provide the necessary protection, then employee(s) must be deployed down the track with fusees and red flag in both directions of approaching movements. They must continue down the track until they reach a point one mile from where the beginning of the restriction is located, they must remain at that location to stop an approaching movement, until advised that other protection has been provided.

When a train is seen or heard approaching before the employee has reached the required distance, the flagman will light a fusee and drop it between the rails of the track and continue moving in the direction of the approaching train using stop signals with red flag during day and red fusee during night and adverse weather conditions.

In case emergency flagging is necessary by one employee, that employee will go in the direction from which the first train is expected.

22.0 TEMPORARY TRACK CONDITIONS

22.1 TEMPORARY RESTRICTIONS

A. GENERAL INFORMATION

Track bulletins or track warrants may restrict or stop train movements because of track conditions, structures, or men and equipment working.

Only flags or lights that meet standards will be used with temporary track conditions to restrict or stop the movement of trains.

B. REQUESTING TRACK BULLETINS

When a condition exists that requires a train to be restricted, advise the train dispatcher of the following information:

1. Restriction necessary along with reason.
2. Mile post location using mile posts and tenths of a mile from mile posts; (whole mile posts locations should be used whenever possible).
3. The subdivision and track(s) which restriction(s) will apply;
4. The title and name of the employee in charge.

TRACK BULLETIN FORM B should include:

- Date effective;
- Time limits needed;
- Employee in Charge name

On a track bulletin Form B the STOP will always be used in the RESTRICTION column of a track bulletin Form B.

When requesting a track bulletin Form B it should be submitted to the train dispatcher at least 12 hours before effective time, whenever possible.

A track bulletin Form B may only be issued on Main Track(s) and Controlled Siding(s). Exception: On the MN&S. Bass Lake and Savage Spur tracks or running tracks on the NEUS, a track bulletin Form B may beused on these tracks. All other tracks where work may be performed will be protected under non-controlled track procedures.

OTHER TRACK BULLETINS should include:

- Speed restriction or other condition;
- Applicable trains that it applies to.
- Limits and time needed for track out of service bulletins.
- Employee in Charge name.

When requesting a track bulletin removing a track out of service in multiple track territory, a notification of at least 12 hours prior to commencement of the work must be made. Upon receipt of such request and approval, a track bulletin removing the track from service will be issued showing the Foreman in charge on the track bulletin.

22.1 TEMPORARY RESTRICTIONS continued

C. REQUEST FOR TRACK BULLETINS WITHIN MULTIPLE MAIN TRACKS

When it is necessary to perform work within multiple main track territory and the issuance of a track bulletin Form B does not meet the required protection of all tracks, then a track out of service bulletin shall be requested on one of the main tracks and the adjacent track(s) protected by issuance of a track bulletin Form B to cover working limits.

D. VERIFYING TRACK BULLETINS

Track flags for protecting a track bulletin removing a track from service or a track bulletin Form B must not be displayed nor should track be occupied or fouled until it is verified that the requested track bulletin(s) have been issued.

Verification of the track bulletin may be done in one of the following ways:

1. A copy of the track bulletin is received.
   or
2. The train dispatcher advises the track bulletin number, as applicable, has been issued and is in effect.

The employee requesting must check to ensure that the date, time(s), location, restriction, and any other information is correct. If correct the employee in charge will give their name and time to the train dispatcher who will record that information on the train sheet or record book.

22.2 DISPLAY OF YELLOW TRACK FLAG

Yellow track flags warn trains to restrict movement because of track conditions or structures when train movement will be allowed at 10 MPH or more.

EXCEPTION: When a track condition restricts train movement to less than 10 MPH, the condition must be protected by yellow-red and red flags. This protection is necessary until the train dispatcher is notified and advises protection is provided for train movements. Once advised that protection is provided, the yellow-red flag will then be replaced with a yellow flag, and the red flag will be removed.

When not possible to display yellow or yellow-red flags for protection, track must be protected per Emergency Flagging Rule 21.5 until protection is provided by train dispatcher.

Display of a yellow flag at a point other than 2 miles before the restricted area is not permitted. When yellow flag cannot be displayed the proper distance in advance, the following information must be shown on the track bulletin.

YELLOW FLAG NOT DISPLAYED FOR (direction) TRAINS.

22.3 DISPLAY OF YELLOW-RED TRACK FLAG

Yellow-red flags warn a train to be prepared to stop because red flags may be displayed beyond it. These track flags will be used with:

- An emergency condition that requires train movement to stop or that makes the track impassable.
-
- Track Bulletin Form B

  or

- Track Bulletin removing a track from service.

Displaying a yellow-red flag at a point other than 2 miles before the restricted area is not permitted. When yellow-red flag cannot be displayed the proper distance in advance, the following will govern for issuance of track bulletins:

YELLOW-RED FLAG NOT DISPLAYED FOR (direction) TRAINS

22.4 DISPLAY OF GREEN TRACK FLAG

A green flag indicates the end of a speed restriction. If a series of locations require reduced speeds and the green flags could overlap yellow flags. Employees must:

- Place a yellow flag before the first speed restriction.

- Place a green flag only at the end of the last speed restriction.

Green flags must not be placed to release a train from the requirements of a yellow-red flag.

In addition, when a yellow flag is used to warn trains to restrict movement, employees must place a green flag beyond the clearance point on unrestricted track that diverges from restricted track until a track bulletin or track warrant has been issued.

22.5 DISPLAY OF RED TRACK FLAG

When a red flag is displayed to establish working limits, the location of the red flags must be given to other movements before giving permission to enter joint authorities. Red flags used in conjunction with a track bulletin Form B and track bulletin removing a track from service must be displayed at the beginning of the limits.

When approaching a red flag, on-track equipment, train or engine must stop short of the red flag and not proceed unless the employee in charge gives verbal permission. If permission to proceed is received before stop is made, the on-track equipment, train or engine may pass the red flag without stopping.

Displayed Between Rails.

When a red flag is displayed between the rails of a non-controlled track, trains must stop and not proceed until the red flag has been removed by an employee of the class or craft that placed it.

When a red flag is placed in accordance with protection for non-controlled track in use with a derail permission must not be given by employee in charge until the derail is placed in non-derailing position.

Employees of on-track equipment that encounter a red flag between the rails may, after receiving permission from the employee in charge to enter working limits, remove the flag and proceed. The red flag shall be replaced by employee removing once passed that location, before proceeding.

22.6 TRACK FLAG LOCATION

When displaying track flags, observe the following guidelines:

- When yellow, yellow-red, or red flags are used for protection without a track bulletin, the track flags must be placed to protect all possible access to the restricted area. When a track bulletin has been issued, track flags will be displayed only on the track affected.

- Track flags must be displayed at right angles to the right of the track as viewed from an approaching train or on-track equipment, unless the track flag must be placed on the field side of the track in accordance with GCOR 5.4,8 (Flag Location). If possible, teack flags must be displayed so that a clear view of them can be seen at least 1/4 mile away.

- When placing track flags, the least restrictive track flag should be displayed first.

- When removing track flags, the most restrictive track flag should be removed first.

22.7 BLUE SIGNAL DISPLAYED

When a Blue signal is displayed it indicates that track is protected for railroad employees that are on, under or between rolling equipment, who are inspecting, testing, repairing or servicing railroad rolling equipment.

On-track equipment or maintenance of way employees must not remove or place equipment that could block the view of the blue signal. Blue signal may only be removed by the craft or group who placed them.

23.0 ON-TRACK EQUIPMENT SAFETY PROCEDURES

23.1 QUALIFIED OPERATORS

Operators must be qualified on the rules for operation of on-track equipment and on track safety procedure rules. When possible, on track equipment must be operated by an employee who is familiar with the physical characteristics of the territory.

23.2 USE OF ON-TRACK EQUIPMENT

On-track equipment must be used only on company business.

Employee's assigned on-track equipment is responsible for the proper use, condition and protection of such equipment in their charge. Operators must keep equipment in safe condition, making inspection before such equipment is used.

All occupants must keep a sharp look out for any obstructions, especially in flange ways at road crossings, guard rails, frogs and spring rails of spring frogs.

23.2.1 UNDERSTANDING

During the job briefing before starting out there must be a thorough understanding as to what each employee may be responsible for should an emergency arise that would necessitate the quick removal of the equipment from the track. Employees must not attempt to remove such equipment at the risk of their own safety.

Every precaution must be taken by Employee in Charge to see that equipment is operated in a safe manner at all times.

Where view may be obscured, due to track, weather conditions or at night, the Employee in Charge must see that the necessary precautions are taken to prevent an accident.

23.2.2 RIDING ON TRACK EQUIPMENT

Employees, other than the equipment operator(s) are prohibited from riding on any on-track roadway maintenance machines unless a safe and secure position is on the machine that is clearly identified by stenciling, marking or other written notice.

A vigilant watch must be kept in each direction; no mater what type of movement is being made, whenever practicable

Employees must be in a safe position to prevent injury to themselves or others and no part of the body must protrude outside the equipment. Employees riding on track equipment must remain alert, orderly and quiet.

When on-track equipment is occupied by one employee, the operator must face in the direction of the movement and occasionally look to the rear.

Employees are prohibited from riding on push cars, except those designed for that purpose.

Employees are prohibited from getting on or off on-track equipment while in motion, except in cases where an emergency exists. When getting off equipment get off on the field side of equipment, when possible.

23.2.3 LIGHTS DISPLAYED

When on-track equipment is operated on a track, a white light must be displayed to the front and a red light to the rear, if so equipped. Yellow flashing roof beacon light must be operated at all times, if so equipped.

23.2.4 ROAD CROSSINGS

When passing over public road crossings at grade, on-track equipment must be handled in the following manner:

- Approach crossings under complete control.
- Stop, if necessary.
- Provide warning to vehicular traffic, if necessary.

Highway traffic must be given preference. Operators must use extreme caution when approaching and moving over road crossing.

The responsibility of striking a vehicle at a highway crossing rests with the operator in charge of the on-track equipment.

Putting on-track equipment on or taking it off the rail at road crossings, employees must guard against highway vehicles, providing warning using flags or fusees when conditions require or view is obscured. Such movements must be made in a manner so as to eliminate a chance for an accident.

23.2.5 FLAGGING EQUIPMENT

The operator must see that the equipment they are operating is provided with an adequate supply of flagging equipment to provide the proper protection, as prescribed by the rules.

Fusees must be carried in the proper flagging kits. The flagging equipment must be secured when not in use.

Any signals, such as, flags or fusees that are damaged or displayed must be replaced immediately.

23.2.6 TRANSPORTING TOOLS AND MATERIAL

Operators must be certain that tools, materials, supplies or other objects are placed so they will not obstruct machinery or operating controls of on track equipment. Equipment must be stored so that it will not protrude over sides, fall from ends or over sides while in motion. Where tool trays are provided, lining bars and other bars must be placed in the bottom of the tray. Tools, material or other objects that will not fit inside of the tool tray must be stowed or securely fastened.

Tool trays must not be overloaded.

23.2.7 GUIDE WHEELS FOR RAIL OPERATION

When preparing a hi-rail for rail operation, the operator in charge must make a visual inspection of the guide wheel arrangement noting specifically, uneven or undue wear of guide wheel alignment, condition of safety pins and other wearing parts. After all four wheels are locked in the on-rail position, secure front highway wheels in the straight ahead position with the steering wheel lock located on steering column. To determine that guide wheel assembly and guide wheels are in proper alignment:

1. Move vehicle with guide wheels locked in "down position" to a level or flat piece of track (not elevated or on curve).

2. Observe that there is clearance between guide wheel flange and rail and that flanges do not ride or bind the rail. Track gauge should be checked to assure correctness.

3. Defects must be corrected before vehicle is placed in hi-rail service.

While guide wheels are locked in on-rail position, do not place hands or pressure on steering wheel as an assist in getting in and out of the vehicle; to do so places an undesirable lateral force on rail guide wheels creating a tendency to ride or hug rail.

23.2.8 UNATTENDED ON-TRACK EQUIPMENT

When removed from the track, on track equipment must be placed not less than 6 feet from the nearest rail where they will NOT be struck by passing trains, snow removal equipment or create a safety hazard.

When stored on tracks other than a main track, the piece of on track equipment nearest to each switch must be chained and locked to the rail, as well as blocked, except when a derail(s) is on the track within 100 feet of the nearest piece of on track equipment. Also, any switch which provides access to the track must be locked with an effective locking device and tagged as out of service to prevent movement into track.

When not practicable to place an effective locking device on switch(es), where on track equipment is stored, derail(s) must be placed to provide protection against other movements approaching on track equipment.

On track equipment must not be stored on tracks designated as Hot Box Detector or Bad Order set off spots, unless absolutely necessary. If it becomes necessary to use these locations the following will apply:

- Tracks connected at both ends, on track equipment must be placed immediately beyond the fouling point to the switch nearest the Trackside Warning Detector. Switch nearest to the Trackside Warning Detector must be locked with an effective locking device and derail(s) placed on other side of equipment.

- Tracks that stub end, on track equipment must be placed to provide for the maximum length of track available for the setting off of cars and protected by derail/red flag.

The train dispatcher must be advised when tracks are taken out of service for the storage of on track equipment so that a track bulletin may be issued advising all trains and engines of the location of the on track equipment, except in yards where yardmasters are employed the yardmaster will then be notified.

23.2.8 UNATTENDED ON-TRACK EQUIPMENT … continued

Where the use of temporary derails are used for protection on other than a main track, a red flag will be placed between the rails by the derail in direction of approaching movement.

Examples of stored equipment:

- Temporary derail for one direction
- Permanent derail
- Effective Locking Device
- Red Track Flag

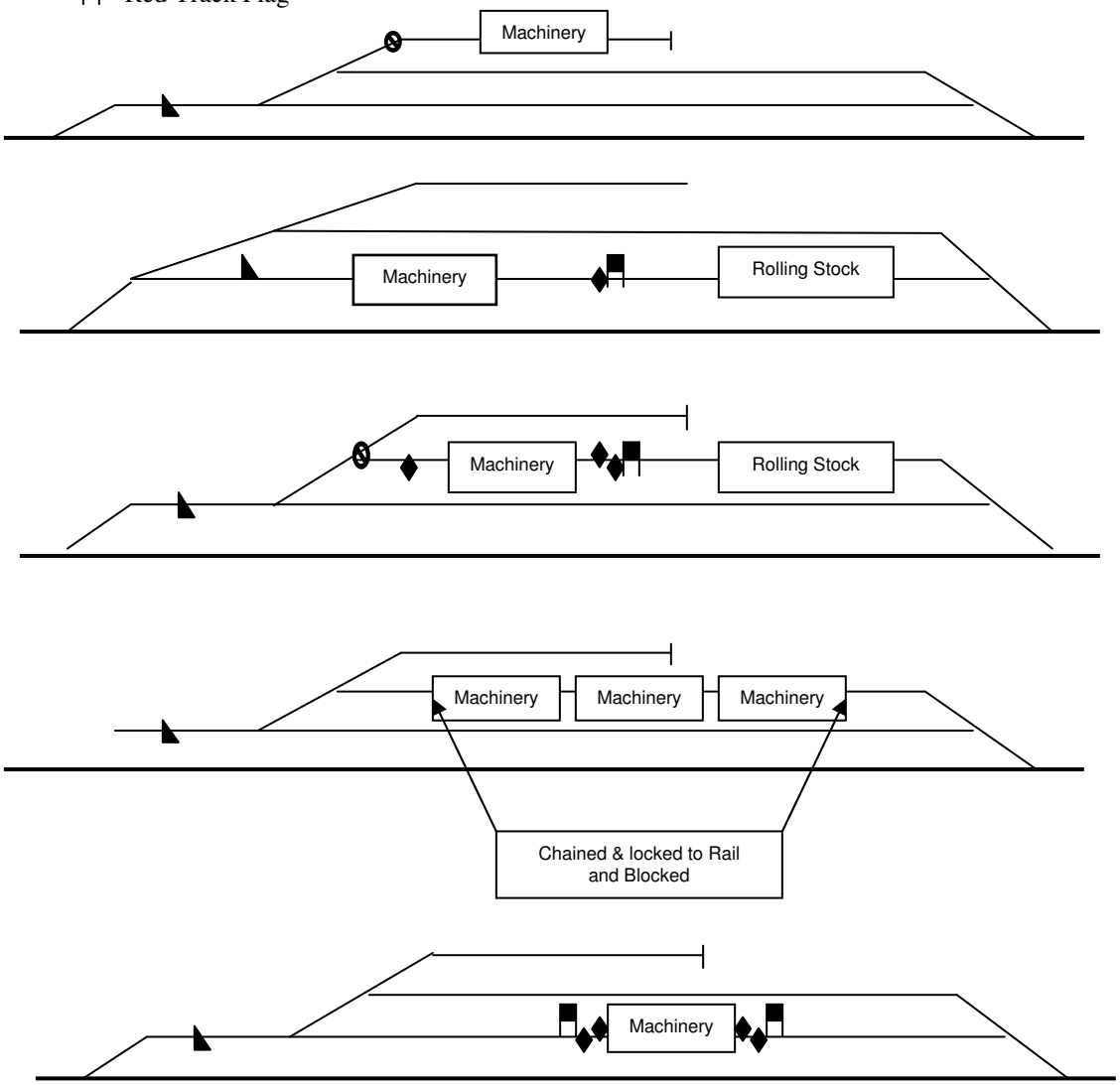

Train Dispatcher and/or Yardmaster must be notified when on track equipment is stored on tracks and when they are removed from such track.

23.2.9 TOWING WITH ON-TRACK ROADWAY MAINTENANCE MACHINES OR HI-RAIL

When used to tow push cars or other maintenance of way equipment, each on-track roadway maintenance machine or hi-rail vehicle shall be equipped with a towing bar or other coupling device that provides safe and secure attachment.

An on-track roadway maintenance machine or hi-rail vehicle shall not be used to tow push cars or other maintenance of way equipment if the towing would cause the machine or hi-rail vehicle to exceed the Stopping Distance and Maintaining Safe Braking Distance requirements per OTS Rule 23.4

23.2.10 IN SERVICE FAILURE OF PRIMARY BRAKING SYSTEM

In the event of a total in-service failure of its primary braking system, an on-track roadway maintenance machine may be operated for the remainder of its tour of duty with the use of a secondary braking system or by coupling to another machine, if such operations may be done safely.

If the total in-service failure of an on-track roadway maintenance machine's primary braking system occurs where other equipment is not available for coupling, the machine may, and it is safe to do so, travel to a clearance or repair point where it shall be placed out of service until repaired.

23.3 MOVEMENT OF ON-TRACK EQUIPMENT

23.3.1 MAXIMUM AUTHORIZED SPEEDS FOR ON TRACK EQUIPMENT

Consideration must be given to track and weather conditions which may affect the movement as outlined under OTS Rule 23.4 (Stopping Distance and Maintaining Safe Braking Distance) in determining proper speed. Reduce speed, if necessary, to ensure safety.

Listed below is the maximum authorized speed for movement of the various types of equipment.

Hi-rail inspection vehicles ……	45 MPH
Hi-rail vehicles with GVW 15,000 pounds or more…….	25 MPH
Crew-cab pickups with hi-rail guide wheels…….	30 MPH
Roadway machines and work equipment……..……	30 MPH
Gang motor cars without trailers……..……	25 MPH
Gang motor cars with trailers or push cars attached……	20 MPH
Geometry cars (self-propelled) ……..……..	45 MPH
Geometry cars (handled in train)……..……	Timetable Speed
Rail Grinders ……..…….	45 MPH
Trackmobile without cars attached ……..……	25 MPH
Trackmobile with cars attached……..……..	20 MPH

All on-track equipment when passing occupied passenger station platforms……. 10 MPH (NOTE: If station crosswalks or platforms are occupied by passengers, equipment must stop before passing them and proceed only when track is known to be clear.)

EXCEPTIONS: The following "Specialized Equipment" is not required to be stopped while being passed by a train on an adjacent track:

1. Rail Grinders
2. Switch Grinders
3. Rail Detector Cars
4. Geometry Cars
5. GRMS (Gage Restraint Measure System)

Restricted speed will not apply to on track equipment moving within or through joint authorities when the location of working limits are established as required under OTS Rule 21.1.2 (Authorities).

23.3.2 MOVEMENT WITHIN OR THROUGH WORKING LIMITS

On-track equipment moving within or through working limits must operate prepared to stop in half the range of vision not to exceed 20 MPH, unless a different speed is otherwise specified by Employee in Charge of working limits.

On-track equipment may make a reverse movement within working limits under the direction of the Employee in Charge. Reverse movements must not be exceeded outside of the working limits established and all reverse movements must be at restricted speed.

23.3.3 RAILROAD CROSSINGS, DRAWBRIDGES, POWER SWITCHES, AND TRACK SIDE WARNING DETECTORS.

On-track equipment must approach railroad crossings, drawbridges, remote control switches, dual control switches, and derails, prepared to stop and if in proper position for their movement, may then proceed over them at 10 MPH. On-track equipment moving over trackside warning detectors must not exceed 10 MPH.

23.3.4 MOVEMENT THROUGH SPRING OPERATED DEVICES.

On-track equipment must be operated at one-half walking speed through a spring rail or spring frog. Some on-track equipment with guide wheels must not be depended upon to actuate any spring type devices. After movement through these devices a check of the guide wheels must be made to make sure they are in proper position, before proceeding.

23.4 STOPPING DISTANCE AND MAINTAINING SAFE BRAKING DISTANCE

On-track equipment must be operated at a speed that will allow the operator to stop within one-half the range of vision.

During operation of on-track equipment, the operator must take into consideration the visibility, track conditions or anything that might affect the safe operation of such equipment.

Operators of on-track equipment must keep in mind that a greater distance and more time is required to stop when pulling heavy loads or when rails maybe oily, wet, frosty or other conditions that make rails slippery. Operators must take the necessary precautions and adjust speed of equipment, when such conditions exist.

On descending grades, always keep the equipment's transmission in gear. Do not permit equipment to coast on descending grades.

On-track equipment must remain at least 500 feet behind a moving or stationary train or engine, except distance may be closer when communication is established with stopped train or engine.

On-track equipment must remain at least 300 feet behind other on-track equipment while traveling to or from a work location.

While in the working mode, on track equipment must maintain a 40 foot space between machines, unless communication is established between operators and employees when work will require a closer space.

Exception: If a ballast regulator is in working mode ballasting the track then 150 foot spacing must be maintained with the ballast regulator.

On-track equipment must be operated in a forward direction, when practicable.

23.5 RADIO REQUIREMENT FOR ROADWAY WORKERS

On-track equipment operating without locomotive assistance between work locations shall have a working radio on at least one piece of equipment for multiple pieces of equipment traveling together under the same authority. The operators of each additional piece of on-track equipment shall have communication capability with each other, which can include the ability to pass and receive hand and other signals.

Each maintenance of way work group shall have intra-group communications capability upon arriving at the work site which can include the ability to pass and receive hand and other signal.

Each employee providing on track safety for a work group and each lone worker shall maintain immediate access to a working radio, which can be a portable radio capable of monitoring transmissions for train movements in the vicinity.

24.0 TRAIN SPEED CALCULATION TIMES

Shown below is a chart that maybe used to calculate running times of trains at the maximum authorized speed that the train may run at.

Note: Use next smaller mileage when calculating time.
Example: If 58 miles use 55 miles

Speed	25	35	40	45	50	55	60	79
Dist Miles	Hr - Min	Hr - Min	Hr - Min	Hr - Min	Hr -Min	Hr - Min	Hr - Min	Hr - Min
10	0 - 24	0 - 17	0 - 15	0 - 13	0 - 12	0 - 10	0 - 10	0 - 07
15	0 - 36	0 - 25	0 - 22	0 - 19	0 - 18	0 - 16	0 - 15	0 - 11
20	0 - 48	0 - 34	0 - 30	0 - 26	0 - 24	0 - 21	0 - 20	0 - 15
25	1 - 00	0 - 42	0 - 37	0 - 33	0 - 30	0 - 27	0 - 25	0 - 18
30	1 - 12	0 - 51	0 - 45	0 - 40	0 - 36	0 - 32	0 - 30	0 - 23
35	1 - 24	1 - 00	0 - 52	0 - 46	0 - 42	0 - 38	0 - 35	0 - 26
40	1 - 36	1 - 08	1 - 00	0 - 53	0 - 48	0 - 43	0 - 40	0 - 30
45	1 - 48	1 - 17	1 - 07	1 - 00	0 - 54	0 - 49	0 - 45	0 - 34
50	2 - 00	1 - 25	1 - 15	1 - 06	1 - 00	0 - 54	0 - 50	0 - 37
55	2 - 12	1 - 34	1 - 22	1 - 13	1 - 06	1 - 00	0 - 55	0 - 41
60	2 - 24	1 - 42	1 - 30	1 - 19	1 - 12	1 - 05	1 - 00	0 - 45
65	2 - 36	1 - 51	1 - 37	1 - 26	1 - 18	1 - 10	1 - 05	0 - 49
70	2 - 48	2 - 00	1 - 45	1 - 33	1 - 24	1 - 16	1 - 10	0 - 53
75	3 - 00	2 - 08	1 - 52	1 - 40	1 - 30	1 - 21	1 - 15	0 - 56
80	3 - 12	2 - 17	2 - 00	1 - 46	1 - 36	1 - 27	1 - 20	1 - 00
85	3 - 24	2 - 25	2 - 07	1 - 53	1 - 42	1 - 32	1 - 25	1 - 04
90	3 - 36	2 - 34	2 - 15	2 - 00	1 - 48	1 - 38	1 - 30	1 - 07
95	3 - 48	2 - 42	2 - 22	2 - 06	1 - 54	1 - 43	1 - 35	1 - 12
100	4 - 00	2 - 51	2 - 30	2 - 13	2 - 00	1 - 49	1 - 40	1 - 15

25.0 SWITCHES

25.1 MAIN TRACK SWITCHES

In CTC territory and Manual Interlocking, a main track switch, crossover switches, or switches within controlled sidings must not be operated without authority from control operator.

25.1.1 SPRING SWITCH(ES)

On-track equipment with guide wheels must not trail through a spring switch unless it is lined for such movements.

25.1.2 DUAL CONTROL SWITCHES

Dual control switches and remote control switches must not be hand operated for movement of on-track equipment when they can be power operated.

25.1.3 ELECTRICALLY LOCKED SWITCHES AND DERAILS

Electric locks on switches and derails must not be operated without permission from the train dispatcher or control operator. The seal on the emergency release of an electric lock must not be broken or emergency release operated by maintenance of way employees without permission from the train dispatcher or control operator.

25.2 PROTECTION DURING REPAIRS

When safe to do so and when it will not interfere with train movements, switches and signals may be operated by the control operator for test or adjustment.

Except in emergency, foreman shall notify the signal maintainer before removing rail or doing track work which will break the track circuit and interfere with the proper working of signals.

25.3 SECURING MAIN TRACK SWITCHES

1. If two or more employees are present, the employee handling the switch will confirm to other employees by stating switch location and using the words LINED, LOCKED AND CHECKED.

2. If no other employee is present, the employee will transmit over the radio, if available, the following:
   - name,
   - switch location,
   - “LINED, LOCKED AND CHECKED”
   - position the switch is in.

   No response is required for this radio announcement.

3. If main track authority to occupy the main track is being released to the train dispatcher or control operator where a hand operated switch was used to clear the main track, the employee will state that the switch is LINED, LOCKED and CHECKED for normal position. This information will be repeated to the train dispatcher or control operator during release of their main track authority.

25.3 SECURING MAIN TRACK SWITCHES … continued

4. If a main track switch is found to be in reverse position, upon reporting the switch restored back to normal position to the train dispatcher, employee will state to train dispatcher:

    - name,
    - switch location,
    - LINED, LOCKED and CHECKED,
    - position of switch

25.4 HANDLING OF SWITCHES FOR TRAIN MOVEMENTS

Engineering service employees are **NOT** permitted to line main track switches for **train movements**. except for:

- Work train movements under the direction of an employee in charge.
- Movements involving train coordination under the direction of an employee in charge.
- During a reported malfunction of a switch and train is stopped at the switch.

or

- To line a main track switch back to normal position found in reverse position.

26.0 UNUSUAL CONDITIONS

26.1 PRECAUTONS ACCOUNT UNUSUAL CONDITIONS

Maintenance of way forces must inspect their track as may be necessary to ensure safety.

In times of unusual weather conditions or high water, maintenance of way employees must watch places most liable to damage, and take every precaution to prevent accidents and to ensure full protection to trains. When conditions require, track must be patrolled ahead of trains. The train dispatcher must be frequently advised of conditions.

26.1.1 PROTECTION AGAINST DEFECTS

Whenever track bridges, culverts or other structure, or equipment are found unsafe or dangerous, or is to be made unsafe for passage of trains at usual speed, or in such condition as to endanger persons or property, proper protection must be promptly provided as required by the rules.

A prompt report must be made to the train dispatcher and the proper Engineering Department officer, showing defects, location, action taken for protection, material and tools necessary and estimated time required making repairs.

27.0 AUTOMATIC CROSSING WARNING DEVICES

27.1 CHANGING RAIL AT CROSSINGS EQUIPPED WITH WARNING DEVICES

When changing rail within the circuits, the crossing warning system must be inspected by a signal maintainer before it may be released for normal operation.

27.2 WORKING ON OR NEAR CROSSINGS WITH AUTOMATIC CROSSING WARNING DEVICES

When automatic crossing warning devices may operate due to work being performed within circuits of the automatic warning devices one of the following methods must be taken for the safety of the public and train movements.

A. The automatic crossing warning devices for the track affected should be temporarily taken out of service and warning provided as prescribed for a malfunctioning device per GCOR Rule 6.32.2

B. When automatic crossing warning devices are taken out of service for related projects with track work or track block request, the signal maintainer may request track bulletin protection in line with GCOR Rule 6.32.2 the night before the work.

When requesting, the signal maintainer will provide the time, date, out of service, crossing name and mile post location for a malfunctioning crossing in line with GCOR Rule 6.32.2.

Train dispatcher will issue a separate track bulletin for each crossing requested to be taken out of service as an Item 1 Stop and Provide flag warning.

Signal maintainer will confer with the train dispatcher on the effective morning to ascertain that protection as been provided as requested, before taking the automatic crossing warning devices out of service for the track block.

If signal maintainer is advised that the track work or track block will be delayed due to further train movements, all automatic crossing warning devices are to remain in service. Signal maintainer will inform the train dispatcher that automatic crossing warning devices are still in service and train movement may be cleared through the affected crossings on an upgrade to an Item 2 (proceed at 15 MPH) or Item 3 Maximum authorized speed, warning provided for all directions of traffic.

A train that is operating with a track bulletin(s) stating that automatic crossing warning devices for crossing at (mile post) is out of service may then be relieved from those restriction(s) only by the train dispatcher. The train dispatcher may contact the train that is approaching the crossing(s) and upgrade the track bulletin(s) to an Item 2 (proceed at 15 MPH) or Item 3 (Proceed at Maximum authorized speed) as dictated by the signal maintainer for the crossing(s) affected by the track bulletins.

Automatic crossing warning devices will remain in service until it is ascertained from the train dispatcher that the appropriate protection is still in place and it is now safe to remove the automatic crossing warning devices from service after train movement(s) have passed the location of the crossing(s).

.

27.2 WORKING ON OR NEAR CROSSINGS WITH AUTOMATIC CROSSING WARNING DEVICES -continued

C. Leave the crossing in service and provide a flagger at the crossing to warn traffic, if crossing warning system will be activated during work until the train dispatcher is notified to provide warning for a malfunctioning device as outlined per GCOR Rule 6.32.2.

NOTE: Whenever the system requires deactivation by a signal maintainer it shall be re-checked by the signal maintainer before it can be returned back to service

28.0 OCCUPIED OUTFIT CARS

28.1 PLACEMENT OF OCCUPIED OUTFIT CARS

When practicable, occupied outfit cars should not be placed adjacent to or in buildings or structures. Avoid spotting outfit cars near placarded cars, or compressed gas or flammable liquid storage facilities. Foreman in charge of outfit cars must see that necessary separations are made between cars for fire protection.

If occupied outfit cars are set out on tracks that parallel the main track or running tracks and clearance is less than 25 feet, foreman must make arrangements for occupants to enter and leave cars from the side opposite the main or running tracks. Foreman in charge of outfit cars must know that the steps of the outfit cars are maintained in safe condition and securely fastened.

28.2 MOVEMENT OF OCCUPIED OUTFIT CARS

The foreman in charge must notify the Train Dispatcher when outfit cars are to be moved and of any placarded cars for which waybills are needed. The request must include information as to destination, whether cars are haul in the rear and of any speed restrictions placed on the cars.

Before outfit cars are placed in train for movement, foreman in charge must see that there is nothing attached to, or connected with, such cars that would render movement unsafe. When cars are moved in trains, steps should be placed in outfit cars or securely fastened in place provided. Foreman must inspect all fuel lines to make sure they are shut off at fuel tank(s) prior to outfit cars being moved.

29.0 RESPONSIBILITIES OF ROADWAY WORKERS

29.1 ALL ROADWAY WORKERS (GENERAL)

A. JOB BRIEFINGS

All employees must participate in and not begin work until a Job Briefing is held per On-Track Safety Rule 30.1 (CONDUCTING A JOB BRIEFING).

B. PROTECTION

Employees are responsible to comply with the rules and instructions.

C. CROSSING TRACKS

When crossing tracks, employees must expect the movement of equipment at any time, on any track and in either direction.

The following procedures should be adhered to:

1. Look both ways, then take the shortest route. If more than one track, stop and look both ways before crossing each track.

2. Keep at least 15 feet from standing equipment.

3. Do not cross between cars standing unless they are separated by at least 50 feet on the same track.

4. Do not cross tracks immediately in front of moving equipment, unless you can reach a place of safety on opposite side 15 seconds before the equipment arrives.

Employees that are actually engaged in work, which requires carrying tools or material that restricts motion, impairs sight or hearing, or prevents an employee from moving rapidly away from an approaching train or other on-track equipment must have on track protection in place before crossing tracks.

D. HIGH VISIBILITY

The appropriate high visibility clothing is required per company policy when working on or about tracks.

29.2 ROADWAY WORKER (EMPLOYEES)

Employees are responsible to comply with the rules and instructions.

Employees are also responsible for the following:

1. Shall not foul tracks except when necessary in the performance of duty.

2. Each Roadway Worker is responsible for determining that on track safety is provided before fouling any track or assuming a position where they could potentially foul a track while performing their duties.

3. Employees must acknowledge understanding of the on track safety procedures being used and know who the Employee in Charge is. This information will be provided in the Job Briefing.

4. Each employee has the right to challenge, in good faith, any instruction to violate an on track safety procedure or rule. They shall inform the Employee in Charge that the necessary on track safety provisions to be used at the job location do not comply with the rules. They shall remain clear of the track until the conflict is resolved. Conflict resolution procedures are found in On-Track Safety Rule 31.0 (Right to Challenge On Track Safety)

5. Employees must not perform any work that will interfere with the safe passage of trains, unless on track protection is provided.

A. CLEARING TRACKS FOR APPROACHING TRAIN MOVEMENTS

When clearing the track for the approach of a train the following precautions are to be taken:

1. When notified or aware of approaching movement, stop all work and clear the track. Employee must be in place of safety 15 seconds before movement arrives at that location.

2. Report to the location designated during the Job Briefing by the Employee in Charge.

3. Face the direction from which the movement is approaching and keep alert for projecting, dragging or falling objects.

4. Inspect all passing trains. If a defect is detected or a dangerous condition exists, notify train crew using any available means to stop the train. If train does not stop notify the train dispatcher.

5. Tools, material, objects or equipment must not be left where they could be struck by a passing movement.

6. Track cars and on-track equipment must be secured against moving and employees shall be clear of track while movement is passing.

7. Employees shall stay clear of track until notified that it is safe to return to work.

NOTE: Employees or equipment may not clear onto another track unless Working Limits have been established on that track.

29.2 ROADWAY WORKER (EMPLOYEES) continued

B. WORKING ON OR AROUND SELF PROPELLED EQUIPMENT

When necessary to work on or around self propelled equipment the following precautions shall be followed:

1. Employees operating and riding on self propelled equipment must understand the duties each will perform.

2. Use the proper equipment for getting on, riding on, and getting off equipment.

3. Must not get on or off moving equipment, except in cases of an emergency.

4. Communicate with the operator of the equipment to find out the normal operating procedures, location of employees around equipment, operator blind spots and signal to warn when equipment will move.

5. If duties require being around working equipment, a 15 foot safe area must be maintained.

6. If duties require being within the 15 foot safe area, communication with the operator must be established before performing these duties.

29.3 EMPLOYEE IN CHARGE

A. DESIGNATING THE EMPLOYEE IN CHARGE

One employee must be designated as the Employee in Charge. When two or more gangs work together only one employee will be in charge. A Lone worker is an Employee in Charge.

B. RESPONSIBILITIES OF EMPLOYEE IN CHARGE

The Employee in Charge is responsible for the safety, instruction, performance and on track safety procedures for all employees under their jurisdiction.

They are also responsible for the following:

1. Preparing employees for job assignments through Job Briefings per On-Track Safety Rule 30.1 which will include:

    a. General plan and procedure the work will follow and on track safety procedures to be used.

    b. Making definite work assignments.

    c. Informing employees where the place of safety is when necessary to clear for trains.

    d. Making sure all employees understand and acknowledge the on track safety procedures being used.

    e. On forms where an initial line shows the following will apply:

    - Employee in charge of one piece of on-track equipment must have other employees initial the form

    - Employee in Charge of two or more pieces of on-track equipment must have at least one other employee initial the form.

2. Conduct additional Job Briefings when on track safety procedures change.

3. Warn employees to clear the track when on track safety procedures being used change or is no longer in effect and conduct an additional Job Briefing prior to allowing employees to return to the track and work.

4. Ensure that employees comply with all applicable rules.

5. Supervise any work involving hazards and discuss specific procedures to protect against such hazards.

6. Promptly advise their supervisor if any employee does not comply with instructions from employee in charge or continues to use unsafe work habits.

29.4 EMPLOYEE RESPONSIBLE FOR ON TRACK PROTECTION

If two or more gangs are working within the same Working Limits one employee will be designated the Employee Responsible for track protection for the purpose of establishing On-Track Safety.

They are responsible for the following:

1. Conduct Job Briefings per On-Track Safety Rule 30.1 with each employee or the Employees in Charge when multiple gangs are included in the working limits, that includes that on track safety is being provided and safety procedures to be followed.

2. Job Briefing will be complete after employees have acknowledged understanding of the on track safety procedure being provided.

3. Provide on track safety on all adjacent tracks that are not included in the working limits when large scale production gangs are working.

4. Each employee or Employee in Charge shall again be again informed whenever on track safety procedures change during the work period. This information must be given to all employees before the change is effective, except in cases of emergency. Employees who, because of an emergency, cannot be notified in advance shall immediately be warned to clear the track and not return until on track safety is re-established.

5. Must notify all employees before the working limits are released for the movement of trains. The work area shall not be released until all affected employees have either left the track or have been afforded on track protection per On-Track Safety Rule 21.3 (LOOKOUTS).

29.5 RESPONSIBILITIES OF LOOKOUTS

Lookouts are responsible for the following

1. Identify a place of safety where they and the employees they are protecting can go when a train approaches.

2. Communicate the place of safety to the other employees prior to the track being fouled or occupied.

3. Devote their full attention to detecting the approach of trains and warning to employees.

4. Warn employees when an approaching train or on-track equipment reaches the minimum required site distance identified.

NOTE: A warning is sufficient when employees can move to the designated place of safety not less than 15 seconds before a train moving at maximum authorized speed passes the location of employees.

5. Use a method to warn employees of the approach of a train or on-track equipment that:
   - Is distinctive, clear, and unquestionable.
   - Does not require employees to be looking in any particular direction.
   - Can be detected by employees regardless of noise or work distractions.

29.6 RESPONSIBILITIES OF LONE WORKER

As an employee working alone and providing your own on track safety, you may watch for trains yourself, where permitted, or use another method of on-track protection.

Individual Train Detection as outlined under On-Track Safety Rule 21.5 may be used when all conditions have been met.

Lone Worker is responsible to:

1. Conduct a Job Briefing with their Supervisor or other designated employee, such as the Train Dispatcher, Control Operator, etc. at the beginning of tour of duty.

This briefing should include:

- Planned itinerary
- On-track safety procedure to be used.
- When communication has failed, the Job Briefing shall be conducted as soon as
- possible, after the beginning of the tour of duty when communication is restored.

2. Complete a Statement of On Track Safety form and have it in their possession while in effect.

29.7 RESPONSIBILITIES OF MAINTENANCE MACHINE OPERATORS

Machine operators are responsible for the following:

1. Trained on the machine they are to operate.

2. Communicate with employees in vicinity of equipment the normal operating procedures, location of employees around equipment, operator blind spots and signal to warn when equipment will move.

3. Maintain a 15 foot clearance between employees working on the track in front of or behind the equipment, unless operation requires that employee be closer and communication with the employees involved has taken place.

4. Maintain the proper distance between equipment when traveling or working per On-Track Safety Rule 23.4 (STOPPING DISTANCE AND MAINTAINING SAFE BRAKING DISTANCE).

5. The Operator's Manual shall be available and on the equipment where possible to permit the operator to determine the safe operating procedure.

6. Do not foul an adjacent track with any part of the equipment unless protection has been provided.

7. Do not allow anyone to distract you or interfere with your duties. If this happens, stop movement at once.

30.0 JOB BRIEFING

30.1 CONDUCTING A JOB BRIEFING

A Job Briefing must be conducted before any worker fouls any track. A job briefing can only be considered complete when each roadway worker has acknowledged understanding of the on-track safety procedures and instructions. Lone Worker job briefings are outlined under On-Track Safety Rule 29.6 (RESPONSIBILITIES OF LONE WORKER).

All information related to on-track safety must be given in the job briefing to every worker who will foul the track.

The minimum on-track safety information must include:

- Designation of the Employee in Charge
- Type of track authority
- Track limits of track authority
- Time limits of track authority
- Track(s) that may be fouled
- Protection, if any, on adjacent tracks including
  - identification of machines that will foul adjacent track.
  - instructions on the nature of work to be performed by the machine.
  - characteristics of the work location in relation to the adjacent track.
- Procedure to arrange for on-track safety of other tracks, if necessary.

Follow-up job briefings must be conducted whenever:

- Working conditions or procedures change
- Other workers enter the working limits,
  or
- Track authority is changed, extended, or about to be released.

Additional Job Briefing Guidelines are located in Timetable Special Instructions.

31.0 RIGHT TO CHALLENGE ON TRACK SAFTEY

The CANADIAN PACIFIC RAILWAY and each roadway worker shares joint responsibility for ensuring that On Track Safety is provided.

31.1 RESPONSIBILITIES OF CANADIAN PACIFIC RAILWAY

THE CANADIAN PACIFIC RAILWAY MUST:

- Provide proper training of every Roadway Worker as outlined under Rule 20.1 (Training and Qualifications)

- Guarantee each employee the absolute right to challenge, in good faith, whether the On Track Safety procedures to be applied at the job site comply with CANADIAN PACIFIC RAILWAY Rules and to remain clear of the track until the challenge is resolved.

- Follow the procedure outlined in 31.1.3 (Resolving Challenges to On Track Safety Procedures) to achieve prompt and reasonable resolution of challengers.

31.2 RESPONSIBILITIES OF THE ROADWAY WORKER

EACH ROADWAY WORKER MUST:

Follow CANADIAN PACIFIC RAILWAY On Track Safety procedures.

Not foul a track except when necessary in the performance of duty.

Ascertain that On Track Safety is being provided before fouling a track.

Refuse any directive to violate an On Track Safety rule and promptly notify you supervisor when the safety provisions, to be applied at the job site do not comply with CANADIAN PACIFIC RAILWAY rules.

31.3 RESOLVING CHALLENGES TO ON TRACK SAFETY PROCEDURES

Challenges, made in good faith, will be resolved in the following manner:

1. The Roadway Worker will inform the Employee-in-Charge that they do not believe that the protection afforded Roadway Workers complies with CANADIAN PACIFIC RAILWAY On Track Safety procedures. Employees may not be subject to any retribution or punishment for making a good faith challenger to On Track Safety procedures.

2. The Employee-in-Charge will review the On Track Safety procedures with the employee to verify that the proper procedures have been applied.

3. If the employee making the challenge is still not satisfied that the On Track Safety procedures comply with CANADIAN PACIFIC RAILWAY rules, the next level Supervisor will be contacted. The On Track Safety procedures will again be reviewed and determination made by the next level Supervisor whether the On Track Safety procedures are being properly applied.

31.3 RESOLVING CHALLENGES TO ON TRACK SAFETY PROCEDURES …continued

- If the next level Supervisor determines that the On Track Safety procedures are not being properly applied, the Employee-in Charge will modify the On Track Safety procedures to ensure proper protection of employees.

- If the next lever Supervisor determines that On Track Safety procedures are being properly applied, the challenging employee must perform their assigned duty. If the employee still refuses to perform their assigned duty, discipline may be assessed.

4. Written documentation of all challenges made to the next level Supervisor will be reviewed regularly by the Field Manager. A union representative will be invited to review these challenges with the Field Manager.

5. Any recommendation for changes in CANADIAN PACIFIC RAILWAY On Track Safety procedures resulting from the Field Managers review will be forwarded to the Chief Engineer.

32.0 RIGHT TO CHALLENGE ROADWAY MAINTENANCE MACHINE SAFETY

The Canadian Pacific Railway and each roadway worker share the joint responsibility of ensuring that all machines and high rail vehicles are safe to operate and comply with these regulations.

32.1 RESPONSIBILITIES OF CANADIAN PACIFIC RAILWAY

The Canadian Pacific Railway must:

- Provide training on the requirements of Roadway Maintenance Machine Safety.
- Guarantee each employee the absolute right to challenge in good faith, whether the machine or high rail vehicle used on the job site is safe to operate and not operate it until the challenge is resolved.

Follow the procedures outlined in 32.3 Resolving Challenges to Roadway Maintenance Machine Safety to achieve prompt and reasonable resolution of challenges

32.2 RESPONSIBILITIES OF EACH ROADWAY WORKER

Each Roadway worker must:

- Ensure the machine or high rail vehicle they operate is safe and in compliance prior to operation.
- Apply a designated tag to the machine or high rail vehicle, if a non-complying condition cannot be repaired, and record the date and non-compliance on the tag.

Report a machine or high rail vehicle, in non-compliance, to the Track Programs and Equipment Coordinator.

32.3 RESOLVING CHALLENGES TO ROADWAY MAINTENANCE MACHINE SAFETY

Challenges made in good faith will be resolved in the following manner:

1. The roadway worker will inform the Track Programs and Equipment Coordinator that they believe that the machine or high rail vehicle does not comply with the requirements. The roadway worker may not be subject to any retribution or punishment for making a good faith challenge.
2. The Track Programs and Equipment Coordinator will review the requirements with the roadway worker to verify that the machine or high rail vehicle dos not comply with the requirements.
3. If the Track Programs and Equipment Coordinator determine that the machine or high rail vehicle is in compliance they will direct the roadway worker making the challenge to operate the machine or high rail vehicle.
4. If the Track Programs and Equipment Coordinator determines that the machine or high rail vehicle is not in compliance:
    - If a part is required to repair the defect order it within in one business day or remove the non-complying machine or high rail vehicle from on-track service until it is repaired.
    - If the repairs cannot be made, after receiving the required part, within seven calendar days remove the machine or high rail vehicle from on-track service until it is repaired.
    - If the part is unavailable and/or the machine or high rail cannot be repaired in accordance with these regulations after 30 days remove the machine/high rail vehicle from on-track service until it is repaired.

Written documentation of all challenges made are to be made on the required form.

40.0 GENERAL CODE OF OPERATING RULES (GCOR)

The following General Code of Operating Rules (GCOR) as outlined and modified by Timetable Special Instructions applies to Engineering Department Personnel affected by such rules:

GENERAL RESPONSIBILITIES	PAGE
1.1 Safety ……	1-1
1.1.1 Maintaining a Safe Course …….	1-1
1.1.2 Alert and Attentive ……..	1-1
1.1.3 Accidents, Injuries, and Defects …….	1-1
1.1.4 Condition of Equipment and Tools ……	1-1
1.2 Personal Injuries and Accidents ……..	1-1
1.2.1 Care for Injured ……..	1-1
1.2.2 Witnesses ……	1-1
1.2.3 Equipment Inspection ……	1-1
1.2.4 Mechanical Inspection ……	1-2
1.2.5 Reporting ……	1-2
1.2.6 Statements ……..	1-2
1.2.7 Furnishing Information …….	1-2
1.3 Rules ……	1-2
1.3.1 Rules, Regulations, and Instructions .....…	1-2
1.3.2 General Orders .....……...	1-3
1.3.3 Circulars, Instructions, and Notices	1-3
1.4 Carrying Out Rules and Reporting Violations	1-3
1.5 Drugs and Alcohol .....……..	1-3
1.6 Conduct .....…….	1-3
1.6.2 Notification of Felony Convictions	1-4
1.7 Altercations .....……	1-4
1.8 Appearance .....……..	1-4
1.9 Respect of Railroad Company .....…	1-4
1.10 Games, Reading, or Electronic Devices	1-4
1.11 Sleeping .....……	1-4
1.12 Weapons .....……	1-5
1.13 Reporting and Complying with Instructions	1-5
1.14 Employee Jurisdiction .....…….	1-5
1.15 Duty - Reporting or Absence .....…	1-5
1.16 Subject to Call .....……	1-5
1.17 Hours of Service Law .....……..	1-6
1.18 Unauthorized Employment .....…	1-6
1.19 Care of Property .....……	1-6
1.20 Alert to Train Movement .....…..	1-6
1.21 Occupying Roof .....……	1-7
1.22 Not Permitted on Equipment .....…	1-7
1.23 Altering Equipment .....…….	1-7
1.24 Clean Property .....…….	1-7
1.25 Credit or Property .....……	1-7
1.26 Gratuities .....…….	1-7
1.27 Divulging Information .....……	1-7
1.28 Fire .....……	1-7
1.29 Avoiding Delays .....……..	1-8
1.35 Dump Doors .....……	1-9
1.44 Duties of Train Dispatchers .....…	1-10
1.45 Duties of Control Operators and Operators	1-10
1.46 Duties of Yardmasters .....……	1-11
1.47 Duties of Crew Members …….....…	1-11

2.0 RAILROAD RADIO RULES
2.1 Transmitting 2-1
2.2 Required Identification 2-1
2.3 Repetition 2-1
2.4 Ending Transmissions..... 2-1
2.6 Communication Not Understood or Incomplete .. 2-2
2.7 Monitoring Radio Transmissions 2-2
2.8 Acknowledgment 2-2
2.9 Misuse of Radio Communications 2-2
2.10 Emergency Calls 2-2
2.11 Prohibited Transmissions 2-3
2.12 Fixed Signal Information 2-3
2.13 In Place of Hand Signals 2-3
2.14 Mandatory Directive 2-3
2.14.1 Verbally Transmitting and Repeating Mandatory Directive 2-4
2.15 Phonetic Alphabet 2-4
2.16 Assigned Frequencies 2-4
2.17 Radio Testing 2-4
2.18 Malfunctioning Radio 2-4
2.19 Blasting Operations 2-4
2.20 Internal Adjustments 2-4

3.0 STANDARD TIME
3.1 Standard Clocks 3-1
3.2 Watch Requirement 3-1
3.3 Time Comparison 3-1

4.0 TIMETABLES
4.1 New Timetable 4-1
4.1.1 Notice of New Timetable 4-1
4.2 Special Instructions 4-1
4.3 Timetable Characters 4-1

5.0 SIGNALS AND THEIR USE
5.1 Signal Equipment 5-1
5.2 Receiving and Giving Signals 5-1
5.2.1 Looking for Signals 5-1
5.2.2 Signals Used by Employees 5-1
5.3 Hand and Radio Signals 5-1
5.3.1 Hand Signals 5-1
5.3.2 Giving Signals 5-2
5.3.3 Signal Disappearance 5-2
5.3.4 Signal to Stop 5-2
5.3.5 Acknowledge Stop Signal 5-2
5.3.6 Radio and Voice Communication 5-2
5.3.7 Radio Response 5-2
5.4 Flags for Temporary Track Conditions 5-2
5.4.1 Temporary Restrictions 5-2
5.4.2 Display of Yellow Flag 5-3
5.4.3 Display of Yellow-Red Flag 5-4
5.4.5 Display of Green Flag 5-5
5.4.7 Display of Red Flag or Red Light 5-6
5.4.8 Flag Location 5-6
5.5 Permanent Speed Signs 5-6

5.6 Unattended Fusee 5-7
5.8 Bell and Whistle Signals 5-8
5.8.2 Sounding Whistle 5-8
5.9 Headlight Display 5-9
5.9.1 Dimming Headlight 5-9
5.9.2 Headlight Off 5-10
5.9.3 Headlight Failure 5-10
5.9.4 Displaying Headlights Front and Rear 5-10
5.9.5 Displaying Ditch Lights 5-10
5.10 Markers 5-11
5.10.1 Highly Visible Markers 5-11
5.10.2 Alternative Markers 5-12
5.11 Engine Identifying Number 5-12
5.12 Protection of Occupied Outfit Cars 5-12
5.14 Signs Protecting Equipment 5-19
5.15 Improperly Displayed Signals 5-19

6.0 MOVEMENT OF TRAINS AND ENGINES
6.1 Repeat Instructions 6-1
6.3 Main Track Authorization 6-1
6.3.1 Train Coordination..... 6-2
6.4 Reverse Movements..... 6-3
6.4.1 Permission for Reverse Movements..... 6-3
6.5 Handling Cars Ahead of Engine 6-3
6.6 Picking Up Crew Member 6-3
6.8 Stopping Clear for Meeting or Passing 6-4
6.12 FRA Excepted Track 6-4
6.13 Yard Limits 6-5
6.15 Block Register Territory 6-6
6.16 Approaching Railroad Crossings, Drawbridges, and End of Multiple Main Track..... 6-7
6.17 Switches at Junctions 6-8
6.18 Stopping Clear of Crossings and Junctions 6-8
6.21 Precautions Against Unusual Conditions 6-9
6.21.1 Protection Against Defects 6-9
6.24 Movement on Double Track 6-11
6.26 Use of Multiple Main Tracks 6-11
6.27 Movement at Restricted Speed 6-11
6.28 Movement on Other than Main Track 6-12
6.28.3 Cars or Equipment Left on Siding 6-12
6.29 Inspecting Trains 6-12
6.29.1 Inspecting Passing Trains 6-12
6.29.2 Train Inspections by Crew Members 6-13
6.30 Receiving or Discharging Passengers 6-13
6.32 Road Crossings 6-14
6.32.1 Cars Shoved, Kicked or Dropped 6-14
6.32.2 Automatic Crossing Devices 6-14
6.32.3 Protection Of Adjacent Tracks 6-15
6.32.4 Clear of Crossings and Signal Circuits 6-16
6.32.5 Actuating Automatic Crossing Signals Unnecessarily 6-16

7.0 SWITCHING
7.1 Switching Safely and Efficiently 7-1

7.4 Precautions for Coupling or Moving Cars or Engines 7-1
7.5 Testing Hand Brakes 7-1
7.6 Securing Cars or Engines 7-2
7.7 Kicking or Dropping Cars 7-2
7.8 Coupling or Moving Cars on Tracks Where Cars are Being Loaded or Unloaded 7-2
7.9 Switching Passenger or Occupied Outfit Cars 7-2
7.10 Movement Through Gates or Doorways 7-3
7.11 Charging Necessary Air Brakes 7-3
7.12 Movements Into Spur Tracks 7-3
7.13 Protection of Employees in Bowl Tracks..... 7-3

8.0 SWITCHES
8.1 Hand Operation of Switches 8-1
8.2 Position of Switches 8-1
8.3 Main Track Switches 8-1
8.4 Lining Main Track Switch 8-1
8.5 Clearing Main Track Before Restoring Switch .. 8-2
8.7 Clear of Main Track Switches 8-2
8.8 Switches Equipped with Locks, Hooks, or Latches. 8-2
8.9 Movement over Spring Switches 8-3
8.9.5 Spiking Spring Switch 8-4
8.11 Switches in Sidings 8-5
8.12 Crossover Switches 8-5
8.13 Scale Track Switches 8-5
8.14 Conflicting Movements Approaching Switches . 8-5
8.15 Switches Run Through 8-5
8.16 Damaged or Defective Switches 8-6
8.17 Avoid Sanding over Movable Parts 8-6
8.20 Derail Location and Position 8-7

9.0 BLOCK SYSTEM RULES
9.1 Signal Aspects and Indications 9-1
9.2 Location of Signals 9-1
9.3 What Signals Govern 9-1
9.4 Improperly Displayed Signals or Absent Lights . 9-1
9.5 Where Stop Must Be Made 9-2
9.5.1 Changing Established Route 9-2
9.5.2 Protection if Signal Appliance or Track is Damaged 9-2
9.5.3 Protection During Repairs 9-2
9.5.4 Authority to Proceed 9-2
9.6 Change of Signal Indication 9-3
9.7 Failure to Display Most Restrictive Indication ... 9-3
9.12 Stop Indications 9-4
9.12.1 CTC Territory 9-4
9.12.2 Manual Interlockings 9-5
9.12.3 Automatic Interlockings 9-5
9.12.4 ABS Territory 9-5
9.13 When Instructed to Operate Dual Control Switches by Hand 9-6
9.13.1 Hand Operation of Dual Control Switches. 9-6

9.15 Track Permits 9-7
9.17.1 Issuing Track Permits 9-7
9.15.2 Clearing Track Permits 9-8

9.17 Entering Main Track at Hand Operated or Spring Switch 9-10
9.17.1 Signal Protection in ABS by Lining Switch 9-11
9.18 Electrically Locked Switches and Derails 9-11
9.19 Leaving Equipment in Interlockings 9-12
9.20 Clear Track Circuits 9-12
9.21 Overlap Circuits 9-12
9.22 Standing on Sanded Rail 9-13
9.23 Suspension of Block System 9-13
9.23.1 Guidelines While Block System is Suspended . 9-13
9.24 Call Lights 9-14

10.0 RULES APPLICABLE ONLY IN CENTRALIZED TRACK CONTROL (CTC)
10.1 Authority to Enter CTC Limits 10-1
10.3 Track and Time 10-3
10.3.1 Protection of Limits 10-4
10.3.2 Protection of Machines, Track Cars, or Employees 10-4
10.3.3 Joint Track and Time 10-4
10.3.4 Track and Time Acknowledgment. 10-4

14.0 RULES APPLICABLE ONLY WITHIN TRACK WARRANT CONTROL (TWC) LIMITS
14.1 Authority to Enter TWC Limits 14-1
14.2 Designated Limits 14-2
14.3 Operating with Track Warrants 14-2
14.3.1 Leaving the Main Track..... 14-3
14.4 Occupying Same Track Warrant Limits 14-3
14.5 Protecting Men or Equipment 14-3
14.7 Reporting Clear of Limits 14-5
14.8 Track Warrant Requests 14-5
14.9 Copying Track Warrants 14-5
14.10 Track Warrant in Effect 14-6
14.11 Changing Track Warrants 14-6
14.12 Voiding Track Warrants 14-6
14.13 Mechanical Transmission of Track Warrants … 14-6

15.0 TRACK BULLETIN RULES
15.1 Track Bulletins 15-2
15.1.1 Changing Address of Track Warrants or Track Bulletins 15-2
15.2 Protection by Track Bulletin Form B 15-2
15.4 Protection when Tracks Removed from Service . 15-5
15.5 Protection when Tracks Blocked with Equipment .. 15-5
15.6 Change of a Rule, General Order, or Special Instruction 15-5
15.7 Copying Track Bulletins 15-5
15.8 Duplicating Track Bulletins 15-5
15.9 Mechanical Transmission of Trakc Bulletins … 15-6
15.13 Voiding Track Bulletins 15-6

GLOSSARY GL-1

APPENDIX A - Required Sight Distance Chart

Required Sight Distance Chart

Use the chart below to determine the additional seconds that may be required to clear the track(s) and be in the place of safety 15 seconds before the arrival of equipment at that location. Enter the additional seconds needed to clear the track into column C. Calculate the additional footage by taking Column B and multiplying it by column C enter that number into Column D. Take column D and add it to Column E for the total required sight distance needed to be in the place of safety 15 seconds before arrival of equipment at that location and put that number into the required sight distance column.

A Maximum Authorized Speed (MPH)	B Feet/Seconds Traveled	C Additional Seconds Required To Clear Track	D Footage To Be Added To Sight Distance B x C = D	E Required 15 Second Sight Distance (Feet)	F Total Required Sight Distance (Feet) D + E = F
5	7			110	
10	15			220	
15	22			330	
20	29			440	
25	37			550	
30	44			660	
35	51			770	
40	59			880	
45	66			990	
50	73			1,100	
55	81			1,210	
60	88			1,320	
65	95			1,430	
70	103			1,540	
75	110			1,650	
80	117			1,760	
85	125			1,870	
90	132			1,980	

APPENDIX B – Types of Protection

On Track Safety for Controlled Track							
CTC	CP	ABS	Non-signaled Territory	A 4.3	I 4.3		Rule Reference
X	X	X	X			Form B	GCOR 15.2
X	X	X	X		X	Track bulletin (TRK OOS)	GCOR 15.4
X	X					Track & Time	GCOR 10.3
		X	X			Track Warrant	GCOR 14.5
		X	X			Track Permit	GCOR 9.15
X	X	X	X		X	Foul Time	OTS 21.1.5
			X			Block Register	GCOR 6.15
X	X	X	X	X	X	Lookout	OTS 21.3
X		X	X	X		Lone Worker	OTS 21.4
				X		MW Lockout Box	OTS 21.1.6C
				X		Absolute Signals at STOP	OTS 21.1.6 C
X	X	X			X	Absolute Signals at STOP	GCOR 9.5.3

CTC -Track and Time is the preferred method for on track safety.
Lone Worker cannot use ITD within a Control Point, or manual interlocking

On Track Safety for Non-Controlled Track				
No.	**On Track Safety Method**	**Process to follow**	**Method to Secure**	**Field Marking**
1.	**Manual Switch**	Lined against movement onto track and secured	Spiked, Clamp or Switch stand locked with effective locking device.	Tagged
2.	**Derail**	Derail in derailing position	Spiked and/or locked in derailing position	Red Flag and/or lock tagged
3.	**Remote Control Switches**	Request control operator to line switch against movement onto track and apply locking and blocking device.	Control operator will apply locking and blocking device. Employee may also use clamp on switch points after control advises protection is provided. Hump Yards remove air or power from switch(es)	Clamp will be tagged
4.	**Flagman**	Positioned to Stop movements into affected track	Instructions to hold all trains and equipment from track	Flagman with proper appliances
5,	**Rail removed**	Length of rail removed to access	Red Flag minimum of 25 feet in front of removed rail,	Red Flag
6.	**Exclusive Track Occupancy**	Exclusive Track Occupancy on controlled track.	Switches to track from main track within Exclusive Track Occupancy Working Limits	Out of Service Tag attached to unattended locomotive(s) if in area.
7.	**Lookout**	Sight distance verified and then positioned to watch for movements.	Provide audible or visual warning to employees to clear to identified place of safety.	Lookout identified in Job Briefing
7.	**Lone Worker**	Sight distance and ITD form filled out	Identify place of safety and vision and hearing not impaired	Individual Worker.

MINIMUM SAFETY REQUIREMENTS FOR CONTRACTORS WORKING ON RAILWAY PROPERTY

April 2007

Initialed by:

_____

_____

Canadian Pacific's Minimum Safety Requirements for Contractors Working on Railway Property is the minimum safety requirements to be followed at all Times.

Note –

Prior to the commencement of any work at the worksite, a local safety orientation must be conducted in conjunction with Canadian Pacific and shall include the following:

- Hazard identification / risk assessment of hazards inherent in the work to be undertaken or generated by the work processes to be used.
- Various controls used to mitigate risk of the hazards present both as a result of the railway and contractor work processes.
- Local communication procedures including emergency call-out / response.
- Local evacuation procedures.

Initialed by: 2

_____

_____

TABLE OF CONTENTS

SR1 INTRODUCTION 4

SR2 GENERAL 4

SR3 PERSONAL ATTIRE 4

SR4 PERSONAL PROTECTIVE EQUIPMENT 4

SR5 PERSONAL CONDUCT 5

SR6 PROTECTION OF RAILWAY TRAFFIC AND PROPERTY 6

SR7 TRAIN MOVEMENTS AND WORKING NEAR TRACKS 7

SR8 TOOLS, EQUIPMENT AND MACHINERY 9

SR9 CRANES 10

SR10 CLEANUP, ENVIRONMENT AND FIRE PREVENTION 11

SR11 HAZARDOUS MATERIALS and RESPONSIBLE CARE 11

SR12 FIRST AID, INCIDENT AND ACCIDENT REPORTING 12

SR13 JOB BRIEFINGS 13

SR14 CONTRACTOR SAFETY POLICY 14

SR15 CONSTRUCTION SAFETY PLAN 14

SR16 COMPLIANCE WITH SAFETY REQUIREMENTS 16

TABLE A - EMERGENCY INFORMATION SHEET

Initialed by: _____

_____

SR1 INTRODUCTION

1.1 At Canadian Pacific ("**CP**"), safety is an integral part of the way we do business. We expect everyone working on Canadian Pacific's property ("**Railway property**") to be unconditionally committed to safety. Safety must be given top priority and will take precedence over deadlines, production schedules, and all other considerations.

SR2 GENERAL

2.1 The Contractor shall be solely responsible for the safety of it's agents, employees and subcontractors ("**Contractor Personnel**").

2.2 The Contractor shall comply with all applicable health and safety legislation, regulations and codes applicable to the work.

2.3 The Contractor shall ensure that all Contractor's Personnel comply with the following safety requirements when working on Railway property. The Contractor shall have a copy of the following documents on site at all times:

2.3.1 Canadian Pacific's Minimum Safety Requirements for Contractors Working on Railway Property.

2.3.2 Contractor's construction safety plan pursuant to section SR15 (if applicable).

2.3.3 Contractor's Emergency Information Sheet pursuant to section SR15.

2.3.4 Contractor's safety policies, rules and work procedures pursuant to SR14.

2.4 Access to Railway property for any Contractor Personnel is at CP's sole discretion. Such access is only for the purpose of Contractor Personnel performing services for CP, and only for the duration of Contractor's contract with CP. The Contractor shall ensure that Contractor Personnel wear appropriate Contractor photo identification and/or visitor tags while on Railway property, and have appropriate documentation to verify the services being performed for CP. The Contractor shall ensure that Contractor Personnel comply with CP's instructions regarding security restrictions or other restrictions resulting from emergent conditions.

SR3 PERSONAL ATTIRE

3.1 The Contractor shall ensure that Contractor Personnel wear clothing required by applicable legislation, regulation and codes and is suitable to perform job functions safely, protect against hazards to the skin and adequate for existing weather conditions.

SR4 PERSONAL PROTECTIVE EQUIPMENT

4.1 The Contractor shall ensure that Contractor Personnel wear personal protective equipment required by applicable legislation, regulations, codes and as necessary to protect against personal injuries while on Railway property, and in accordance with this Article SR4. All personal protective equipment shall be approved by the Canadian Standards Associations (CSA) or by the American National Standards Institute (ANSI), and shall be in good condition and be properly fitted.

4.2 The following mandatory protective equipment shall be supplied by the Contractor at its own expense, and Contractor shall ensure that it is worn by Contractor Personnel on Railway property:

4.2.1 Safety hard hat shall be worn at all times, except inside enclosed vehicles or equipment.

4.2.2 Safety boots shall be worn at all times. They must have puncture resistant soles and meet CSA Z195 Grade One Green Triangle (Canada), or US ANSI Z41, Section 5 standards.

4.2.3 Safety glasses with permanently attached side shields that meet CSA Standard 94.3 (in Canada) and ANSI Standard 87.1 (in the US) must be worn at all times, except inside office buildings*** and inside enclosed cabs of vehicles.

***Safety glasses as specified above must be worn in office buildings, if the task being performed, results in a risk of injury to the eyes (i.e. construction related tasks, working with electrical hazards, etc.).

Additional eye and face protection equipment is to be worn as determined necessary by the Contractor, based upon the contractor's risk assessment.

Under special circumstances, whereby, the wearing of safety glasses will hinder specialized work being performed by the contractor or that the safety can be improved for the contracted employee(s) by varying from the standard outline above, the wearing of such will be determined by the Contractor, based upon the contractor's risk assessment.

4.2.4 Hearing protectors shall be worn in all designated locations and as required by any applicable governing legislation, regulations, and codes.

4.2.5 Appropriate respirators shall be worn whenever work processes create airborne particulates (i.e. dust, mist, vapour or fumes).

4.2.6 High visibility fluorescent work wear with reflective striping (CSA (Canada) or ANSI (US) approved preferred) shall be worn when on Railway property.

High visibility work wear must not be covered by other clothing or equipment, except where necessary for safety reasons such as where fall protection or pole climbing equipment is being used.

SR5 PERSONAL CONDUCT

5.1 Entry upon Railway property when in possession of, or under the influence of intoxicants, narcotics, controlled substances or medication which may in any way adversely affect alertness, concentration, reaction response time or safety is prohibited. Contractors must have appropriate programs and processes in place to ensure that Contractor Personnel are in compliance with this requirement.

5.2 Possessing or using any alcoholic beverage or drug is prohibited when working on Railway property:

5.3 CP is committed to providing and maintaining a work environment that supports the dignity of all individuals and will not tolerate any discrimination, harassment or violence in the workplace. Contractor shall ensure that Contractor Personnel conduct themselves in a manner consistent with these principles.

5.4 Smoking is prohibited in all buildings and on all Railway property, except where CP management has designated an outdoor smoking area.

SR6 PROTECTION OF RAILWAY TRAFFIC AND PROPERTY

6.1 The work shall be organized and executed in such a manner as to ensure no interference with the regularity and safety of railway operations. No step in any sequence of operations which might either directly or indirectly affect the regularity or safety of railway traffic shall be started until approval of the project manager has been obtained. No temporary structure, materials, or equipment shall be permitted closer than 12 feet (3.66 meters) to the nearest rail of any track without prior approval in writing of the project manager.

6.2 No work shall be done on or above, or use made of, any trackage without approval by the project manager and then only under the direct supervision of a qualified CP flagperson, or unless they are specifically authorized and qualified to perform said work.

6.3 The Contractor shall, at all times, conduct its operations in a wholly responsible manner to avoid damage to the CP's trackage or property.

6.4 Signs, signals and flags necessary for the safe operation of the railway shall not be obstructed, removed, relocated, or altered in any way without proper authorization. Blue flag protection on tracks signifies CP employees are on, under or between rolling stock equipment. Blue flags are important safety devices and must not be touched or obstructed.

6.5 Only qualified personnel are permitted to operate switches, derails, electric locking mechanisms or other appliances. The Contractor shall keep equipment, material and Contractor Personnel clear of this equipment at all times. Neither the Contractor nor Contractor Personnel shall operate or tamper with any signal or communication systems or any other railway safety devices unless specifically authorized and qualified.

6.6 While railway traffic is passing through, within 50 feet of the work area, the mechanisms for securing rotating equipment must be used to prevent rotational movement. Buckets on shovels must be lowered to the ground to rest. Operators shall get out of their equipment and position themselves in a safe area 20 feet from the track as a minimum where possible.

When working in multi-track territory Operators shall exit to the non-live side of the track and position themselves in a safe area 20 feet from the track as a minimum where possible (do not stand on or between adjacent tracks).

6.7 Construction equipment parked on Railway property on nights or weekends shall be secured in a safe position well clear of all tracks to prevent accidental contact with trains and moving equipment and to not restrict train crew sightlines. As much as possible, materials shall be stored in locations where they are not subject to public viewing in

order to prevent vandals from using them to cause derailments or damage to Railway property. Scrap materials shall be disposed of as soon as possible. The Contractor shall consult with CP personnel to determine the best location to store equipment and materials.

6.8 Before starting excavation operations, the Contractor shall ascertain that there are no underground wires, fibre optic cables, pipelines or other facilities which could be damaged or , if present, that such installations are properly protected. Fibre optic cables are present on most segments of the right-of-way. Prior to commencing any excavation, the Contractor shall contact the proper authority to obtain the necessary permit and to locate and protect such cables.

Excavations shall not be left unattended unless they are properly protected; and the CP supervisor shall be notified.

6.9 Railway pole lines carry electric power and should be treated as any other power lines.

6.10 Any Contractor Personnel discovering a hazardous or potentially unsafe condition which may affect the safe passage of railway traffic must advise CP immediately:

In Canada – Network Management Centre (NMC) Calgary 1-800-795-7851

In the US – Operations Centre Minneapolis – 1-800-SOO-HELP (1-800-766-4357)

SR7 TRAIN MOVEMENTS AND WORKING NEAR TRACKS

7.1 The Contractor shall ensure that all Contractor Personnel are aware of and comply with the following safety rules which apply to working near railway tracks:

7.1.1 Personnel shall be alert to train movement shall expect the movement of trains, engines, cars, or other moveable equipment at any time, on any track, and in any direction, even cars on sidings that appear to be stationary or in storage. Stay at least 50 feet (15 meters) away from the ends of stationary cars when crossing the track, and never climb on, under or between cars. To cross tracks, personnel shall look both ways, and if the tracks are clear, walk at a right angle to them.

7.1.2 Personnel shall not rely on others to protect them from train movement. The responsibility is theirs for safety on the railway.

7.1.3 Personnel shall not stand on the track in front of an approaching engine, car or other equipment.

7.1.4 Personnel shall be aware of the location of structures or obstructions where clearances are close.

7.1.5 Personnel shall not stand or walk on railroad tracks, either between the rails or on the ends of ties unless absolutely necessary. Personnel shall stay clear of tracks whenever possible.

7.1.6 Within the **United States**, “ON TRACK SAFETY” rules apply. This is a set of rules, which were developed and promulgated by the Federal Railroad Administration (FRA 49 CFR Part 214, Subpart C - Roadway Worker Protection Regulations). The On Track Safety rules apply to contractors to a railroad who perform inspection, maintenance or repair to railroad facilities. These rules and procedures must be complied with to work on or near Railroad property. Specific training and obedience to these rules and procedures are a requirement of the FRA. Significant willful fines can result from the violation of these rules.

Please refer to Canadian Pacific’s General Requirement for Contractors On Track Safety Procedures.

Contractors will not be allowed to foul a track unless:

- They have been properly advised of the On Track Safety awareness procedures;
- A railway employee who is qualified to provide protection is present at the work site.

Fouling Track - The placement of an individual or an item of equipment in such proximity to a track that the individual or equipment could be struck by a moving train or track unit or in any case within four (4) feet of the field side of the nearest rail.

7.1.7 No work activities or processes are allowed within 50 feet (15 meters) of the track centerline while trains are passing through the work site unless specifically authorized. Personnel shall always, where possible, stand at least 20 feet back from the track(s), to prevent injury from flying debris or loose rigging. Also, personnel shall observe the train as it passes and be prepared to take evasive action in the event of an emergency.

7.1.8 Personnel shall not remain in a vehicle that is within 50 feet (15 meters) of a passing train, and shall not drive near moving trains. Personnel shall move vehicles away from the tracks at least 50 feet (15.24 meters) unless specifically authorized, or park the vehicle away from the tracks and walk to a safe distance whenever trains pass.

7.1.9 Personnel shall not stand on or between adjacent tracks in multiple track territory when a train is passing. Personnel shall be especially alert in yards and terminal areas as engines may be pushing cars, cars may be moving without any engine attached and engine/cars change tracks often.

7.1.10 Personnel shall not walk, stand or sit on the rails. As the rail surface can be extremely slippery, personnel must step over the rails when crossing tracks. Personnel shall also be aware railway ties can also be slippery and that railway ballast can shift while walking on top of it.

Personnel shall stay away from track switches as remotely operated switch points can move unexpectedly with enough force to crush ballast rock.

Personnel shall stay away from any other railway devices they are unsure of. Personnel shall not disturb or foul the ballast at any time.

7.1.11 Personnel shall not foul the track with any piece of equipment without a CP flagperson and proper protection.

7.1.12 Certain projects will require the assistance of a qualified flagperson. The decision as to where flagpersons are required rests with CP. One week advance notice is required before entering Railway property so that flagging protection requirements may be determined and arranged for.

7.1.13 Good communication between Contractor Personnel and CP's flagperson is imperative. Everyone must have knowledge of the flagging limits, time limits and location to clear for any train movements. CP's flagperson will be responsible for clearing any movement of workers and equipment near the tracks, no matter how minor.

7.1.14 Contractor Personnel shall not interfere with a CP's flagperson who is communicating by radio with the dispatcher or other CP employees. Personnel shall wait until the flagperson is finished and able to give them full attention. Personnel shall not assume a move is cleared by something overheard on a radio conversation.

7.1.15 Personnel shall not move equipment across the tracks except at established road crossings, or unless under the protection and authorization of a CP flagperson and only if the job site has been properly prepared for such a move. Tracked equipment will require a CP flagperson any time railroad tracks are crossed.

7.1.16 Personnel shall not move equipment across railroad bridges or through tunnels, except as expressly agreed by CP, and under such conditions as stipulated by CP, including without limitation, a CP flagperson.

7.1.17 The Contractor shall keep all Contractor personnel informed of current weather conditions. Personnel shall stay alert for possible high water conditions or flash floods. During severe weather conditions:

- Personnel shall be prepared to take cover in the event of a tornado.
- Personnel shall not work while lightning is occurring;
- If storm conditions arise unexpectedly, Contractor Personnel shall ensure that equipment is in the clear of the tracks and secured before seeking cover. Contractor Personnel shall stay away from railroad tracks when visibility is poor, such as during fog or blizzard conditions.

SR8 TOOLS, EQUIPMENT AND MACHINERY

8.1 All Contractor equipment, machinery and highway vehicles must:

- Be in good working order (including lights and safety devices such as back-up alarms) and properly serviced and maintained;
- Be safe for their proposed use;
- Be equipped with appropriate emergency equipment (examples include fire extinguisher, first aid kit;) based upon Contractor's risk assessment;
- Comply with all applicable legislation, regulations and codes.

8.2 Drivers of highway vehicles must be in possession of a valid driver's license of the proper class of the vehicle being operated. The use of seat belts is mandatory for all drivers and passengers. Operators of vehicles and construction equipment must keep their headlights on at all times and observe all facility/area's speed limits and traffic rules. Unless otherwise posted, the speed limit on the CP's roads is 15 mph (24 km/h) or less as conditions warrant.

8.3 Unless authorized in writing, contractors' employees are not permitted to operate or ride on any CP rolling stock and shall not be carried in CP vehicles except in case of an emergency or unless specifically authorized.

8.4 Tools must be used only for the purpose for which they are designed. Defective tools must be repaired or replaced.

8.5 Machinery and equipment must be operated and maintained only by persons properly trained and qualified for that duty.

8.6 All equipment shall be in compliance with applicable legislation, regulations and codes and be equipped with appropriate safety apparatus. In particular, all mobile equipment, including excavators, shall be equipped with beacons and backup alarms.

8.7 The Contractor shall provide adequate lighting when performing work between sunset and sunrise.

SR9 CRANES

9.1 The Contractor shall ensure that its cranes and their operation by Contractor Personnel are in compliance with applicable legislation, regulations and codes and be equipped with appropriate safety apparatus. A copy of the latest annual crane inspection shall be provided to CP prior to the commencement of work.

9.2 All cranes shall be equipped with anti-two-blocking devices and safety latches on every hook.

9.3 All lifting apparatus such as steel cables, nylon slings, chains, shackles, etc., must be safety certified.

9.4 The Contractor shall conduct any work in proximity to power lines in such a manner that permits/procedures as required under applicable legislation, regulations and codes are adhered to.

9.5 While railway traffic is passing through the work area, loads on cranes must be lowered to the ground to rest. Cranes without bucket or load must have their load line tightened or retracted to prevent movement.

9.6 Cranes parked on Railway property on nights or weekends shall be secured in a safe position well clear of all tracks to prevent accidental contact with trains and moving equipment and to not restrict train crew sightlines. Consult with CP personnel to determine the best location to store equipment and materials. Crane booms shall be lowered onto ground supports so that it will be impossible for them to rotate and cause a track to be fouled.

SR10 CLEANUP, ENVIRONMENT AND FIRE PREVENTION

10.1 The Contractor shall take care to avoid any hazardous, unsafe, unhealthy or environmentally unsound condition, activity or spill on Railway property. The Contractor shall maintain Railway property in a tidy condition and free from the accumulation of waste products and debris. The Contractor shall not permit any debris, products used in the work, or water used to rinse out equipment, to be discharged or spilled on Railway property or into any adjacent lands, ditches, streams, ponds, sewers, etc.

10.2 The Contractor shall ensure that Contractor Personnel take all necessary precautions to prevent fires. All flammable material such as paper, rubbish, sawdust, oily or greasy rags, etc. must be kept away from buildings, structures and other facilities subject to fire damage. All flammable material must be disposed of daily by Contractor.

10.3 Storing or transporting fuel or gasoline in unapproved containers is prohibited.

10.4 If possible, the use of cutting or welding torches must be avoided during the last one-half hour of shifts.

10.5 Suitable, charged fire extinguishers and/or full water pump cans must be readily available at all times on the work site. Where the Contractor is working on the right-of-way or other property where a fire risk exists, the Contractor shall have appropriate fire prevention and suppression plan (including emergency numbers for CP, local firefighters and fire control districts) as well as such additional fire fighting equipment and trained Contractor Personnel on site, as required by provincial regulations, codes and guidelines.

10.6 CPR's representative must be advised promptly of any fire. Such fire must be fully extinguished or protection provided prior to leaving the work site.

10.7 Upon completion of the work, the Contractor shall remove his surplus materials and equipment from Railway property. The Contractor shall also remove all waste products and debris, including rinse out water, and leave Railway property clean and suitable for occupancy.

SR11 HAZARDOUS MATERIALS and RESPONSIBLE CARE

11.1 If chemicals are required by the Contractor to carry out its contractual obligations, the Contractor must ensure that the transport, label, use and storage of any chemicals are in accordance with all applicable laws, regulations and codes.

11.2 For all chemicals to be used, the Contractor must have available on site the latest Material Safety Data Sheet (MSDS) and provide CP with a list of employees' names who have been trained in Workplace Hazardous Materials Information System (WHMIS), or in OSHA's Hazard Communication Standard.

11.3 A current emergency response plan must be maintained by the Contractor and made available upon request to CP. Emergency response plans must include at a minimum:

- Contractor reporting procedures in the event of an incident or spill;
- Emergency response contacts and phone numbers;
- Incident reporting phone numbers including phone numbers for CP incident reporting and local CP personnel.

Any Contractor Personnel discovering a hazardous or potentially unsafe condition which may affect the safe passage of railway traffic or reporting an emergency or spill must advise CP immediately at:

In Canada,

Network Management Centre (NMC) Calgary 1-800-795-7851

In the US,

Operations Center Minneapolis – 1-800-SOO-HELP (1-800-766-4357)

Canadian Pacific Police Services – 1-800-716-9132

11.4 In the event of an incident or spill, The Contractor must take all reasonable actions to contain the spill and respond in accordance with its emergency response plan.

11.5 The Contractor shall dispose of all chemicals and surplus waste materials in accordance with all relevant legislation, regulations and codes.

11.6 In addition to compliance with all applicable legislation, regulations and codes and as part of CP's commitment to Responsible Care (an initiative by the chemical industry to which CP is a Responsible Care partner), contractors must have appropriate systems and controls in place to mitigate potential environmental, health and safety risks while using chemicals on Railway property. CP will provide Contractor with information regarding Responsible Care upon request from Contractor.

SR12 FIRST AID, INCIDENT AND ACCIDENT REPORTING

12.1 The Contractor must have a first aid kit, of a size suitable for the crew, available in the immediate vicinity of the work site. It must be examined by the Contractor prior to the commencement of work, after each use and regularly each month to ensure that it is properly equipped. Any missing or altered articles must be promptly replaced by the Contractor.

12.2 Where required, other first aid equipment such as stretchers, emergency showers, eye wash stations, etc. must be made available by Contractor at the work site.

12.3 All accidents, personal injury, occupational illness, damage to Railway property or customer property, and incidents, such as environmental spills, must be reported promptly by the Contractor to CP. The Contractor shall provide CPR with as much detailed information as possible, including:

- Time of incident;
- Location of incident;
- Extent of injuries and/or damage;
- Description of incident including the cause of incident, if known; and
- Contractor's name and telephone number.

Canadian Pacific Emergency Numbers

In Canada,

Network Management Centre (NMC) Calgary 1-800-795-7851

In the US,

Operations Center Minneapolis – 1-800-SOO-HELP (1-800-766-4357)

Canadian Pacific Police Services – 1-800-716-9132

In the event of an environmental spill or any spill that could have a negative impact on the environment, the Contractor shall also provide CP with the following information:

- Description of location and surrounding area, including any sensitive environmental areas nearby (e.g., rivers, parks, sewers);
- Type and quantity of substance released;
- Cause of spill or deposit, if known; and
- Details of any immediate action taken or action proposed to be taken to contain spill and recover substance.

12.4 Security concerns and security incidents (i.e. theft, vandalism, bribery, stalking, assault or other incidents that may cause injury or property damage, or involve criminal activity) must be reported by Contractor to the Canadian Pacific Police Service 1-800-716-9132.

SR13 JOB BRIEFINGS

13.1 When required by CP or by the Contractor, a job briefing must be conducted.

13.2 The Contractor Personnel performing services on Railway property must participate in the job briefing and any such individuals who are not able to be present at the main briefing, must attend a separate briefing. Contractor must ensure that all Contractor

Personnel on the work site understand the content of the job briefing. CP representative(s) or designates may attend at CP's sole discretion and shall include the participation of the CP Flagperson if present at the worksite.

13.3 The following topics should be covered in the job briefing:

- Tasks to be accomplished;
- Work location;
- Contractor Personnel responsibilities;
- Equipment to be used;
- Specific safety reminder due to a hazardous condition;
- Identification of all potential hazards specific to the area(s) in which they will be working and the tasks they are performing;
- Special instructions due to an unusual situation or practice;
- Type of track protection along with it's time and physical limits and identification of CP's employee responsible for the protection;
- Emergency response plan/evacuation procedures.

SR14 CONTRACTOR SAFETY POLICY

14.1 Prior to the commencement of any work, the Contractor shall provide CP with its applicable safety policies, rules and procedures.

SR15 CONSTRUCTION SAFETY PLAN

15.1 Prior to commencement of any construction work, the Contractor shall provide CP with a Construction Safety Plan.

15.2 The Construction Safety Plan shall:

15.2.1 List and define the construction methods that will be used for each major phase of the work and describe the process and safety procedures to be incorporated.

15.2.2 Integrate the necessary safeguards to be implemented in the work's planning schedules.

15.2.3 List all safety activities and their frequency including:

- Contractor Personnel's Review of:
  - Canadian Railway's Minimum Safety Requirements for Contractors Working on Railway Property;

- Contractor's Safety Plan;
- Contractor's Emergency Information Sheet, and Emergency Response Plan;

- Contractor Personnel Orientation Meetings;
- Site Hazard Assessments;
- Site Inspections and Monitoring;
- Safety Meetings.

15.2.4 Provide for each piece of heavy equipment to be used, such as loaders, excavators and cranes, a summary of the Contractor Personnel's experience, past performance and safety tests, and list of previous accidents resulting from the equipment's operation.

15.2.5 Provide the layout of temporary construction buildings and facilities, including how the Contractor will ensure safe use.

15.2.6 Provide details of emergency procedures for work near or over water. Emergency equipment such as ring buoys, floating vests and, if physically possible, a powered boat must be readily available in the downstream vicinity of the work site.

15.2.7 Provide details of safety procedures for blasting work. Explosive materials must be handled, stored and used in accordance with all applicable legislation, regulations and codes.

15.2.8 Provide details of safety procedures for work in confined spaces including:

- Atmosphere test results;
- Evaluation of hazard within the confined space;
- Procedures for entering/existing the confined space;
- Required protection equipment;
- Emergency procedures and equipment.

Prior to entry of any Contractor Personnel into a confined space, Contractor shall conduct such testing, and obtain such permits as required under applicable legislation, regulations and codes. Contractor shall ensure Contractor Personnel wear such additional protective equipment as determined necessary by the Contractor, based upon the Contractor's risk assessment of the space (examples include full body harness, approved respirators, etc.).

15.2.9 Provide the layout of cranes, proposed lifting procedures and other pertinent information such as cranes' capacity charts, working radius, loads, possible obstacles or site restrictions, etc.

15.2.10 Provide an Emergency Information Sheet for notifying medical assistance, emergency transportation and direction of rescue operations, including the information identified in appended Table A. Copies of this document shall be present on site at all times and be in a location readily accessible to all Contractor Personnel on the site. Its content shall be reviewed at the beginning of each week and when job location changes. The Contractor must ensure that all Contractor Personnel on the work site are familiar with its contents.

15.3 The Safety Plan shall also include drawings and specifications prepared, sealed and signed by a qualified professional engineer, for each of the following items, whenever applicable to the work:

15.3.1 Details of the design, erection, use and inspection of fall prevention structures such as scaffolding, work platforms and other staging. These are mandatory wherever Contractor Personnel are working at heights in excess of 8 feet (2.44 meters), in Canada or 10 feet (3.05 meters), in the USA, above the nearest permanent safe level or where a drowning hazard exists. This requirement does not apply where pre-engineered scaffolding is used as a fall prevention device; provided it is used in accordance with the manufacturer specifications and is designed to meet all applicable legislation, regulations and codes.

Details of fall protection systems when it is physically impossible to provide safe fall prevention structures or when working on a temporary structure more than 20 feet (6.10 meters) in Canada and as per health and safety legislation, regulations and codes applicable to the work in the US, above the nearest permanent safe level. Personal fall protection equipment shall include a CSA or ANSI approved full body harness, lanyard and shock-absorbing device, attached to a CSA or ANSI approved or engineered anchored lifeline or fixed anchor. The system shall also provide a retrieval device or equipment readily available on the work site. Safety nets are acceptable in lieu of personal fall protection equipment, if it is impracticable to use a fall protection system. The Contractor shall also provide a fall rescue plan to be used in accordance with any fall protection plan as required.

15.3.2 Details of shoring systems for excavations, which may endanger nearby Contractor Personnel or structures. Shoring systems shall be designed to comply with applicable legislation, regulations and codes. Excavations must be properly covered or barricaded with appropriate reflective equipment. Lights or flares must be used where practicable.

SR16 COMPLIANCE WITH SAFETY REQUIREMENTS

16.1 If ever the Contractor's Personnel do not comply with the safety requirements, the Contractor's site supervisor will be reminded of the requirements by the CP's representative. If Contractor Personnel refuses to comply with the safety requirements, the Contractor will be required to ensure that such Contractor Personnel immediately

leave the property, failing which CP maintains the right to require the Contractor Personnel to immediately leave the property. Any working procedures not conforming to the safety requirements will result in the closing down of the work site.

16.2 CP will not accept any claims for delays or lost time due to safety compliance or procedures issues.

The above provisions and requirements may be amended from time to time by Canadian Pacific.

TABLE A - EMERGENCY INFORMATION SHEET

WORK SITE INFORMATION

Work Site Location**:**	(Mileage, Subdivision)	(Address, Number and Street)
Contractor' Supervisor:	(Name)	(Title)
Site Telephone:		
Emergency Site Access Route:	(Provide sketch - showing access roads, physical landmarks to guide EMS to location)	
Nearest Town:		
Certified First Aid Attendant:		
Location of First Aid Supplies at Site:		
Location of Fire Extinguishing Equipment:		

EMERGENCY CONTACT INFORMATION

EMERGENCY CONTACTS	PHONE	LOCATION
Railway Traffic Controller:	( )	
Firefighter:	( )	
Police:	( )	
Ambulance:	( )	
Hospital:	( )	
Physician:	( )	
Aircraft Service, (if applicable):	( )	
Watercraft Service, (if applicable):	( )	
Stretcher location at site:	( )	
Location of WHIMS data sheets:	( )	
Type and location of retrieval systems at bridges, (if applicable):	( )	
Type and location of emergency equipment for work near or over water, (if applicable):	( )	
Employee(s) responsible for rescue operations, (if applicable):	( )	
Designated Evacuation Vehicle:	( )	
Emergency Evacuation Route, (Provide sketch):	( )	

UTILITIES INFORMATION

UTILITIES CONTACT	PHONE	LOCATION
Natural Gas:	( )	
Electrical:	( )	
Fibre Optic Line:		
Water & Sewer:	( )	
Telephone:	( )	
Cable System:	( )	
Qualified employee(s) in:	( )	
Confined Space Entry, (if applicable):	( )	
Equipment requirements for Confined Space Entry, (if applicable):	( )	

Initialed by: 1

_____

_____

All job sites will be open to audits by CP Safety and Health representatives.

Date: _____

Signed: _____
Contractor's Supervisor

Initialed by: 2

_____

_____

Exhibit C.1.2

Preliminary Engineering Document 2

Preliminary Engineering Plans

Canadian Pacific C&M Subdivision near Wadsworth, Illinois
Renewal of Two Bridges for Existing Passenger Rail Speed Preservation

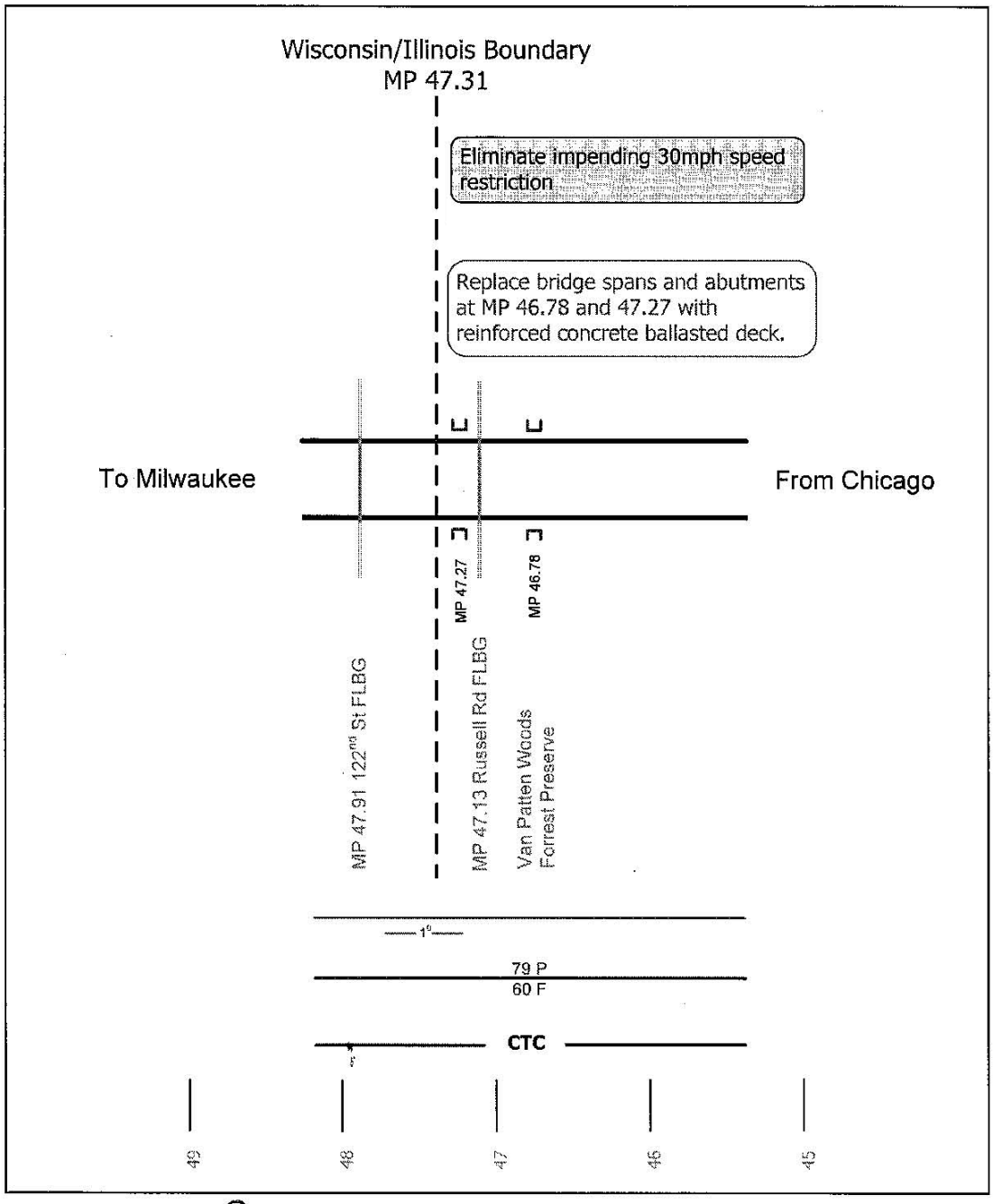

Wisconsin and Southern Railroad

Illinois Department of Transportation

Canadian Pacific

August 13, 2009

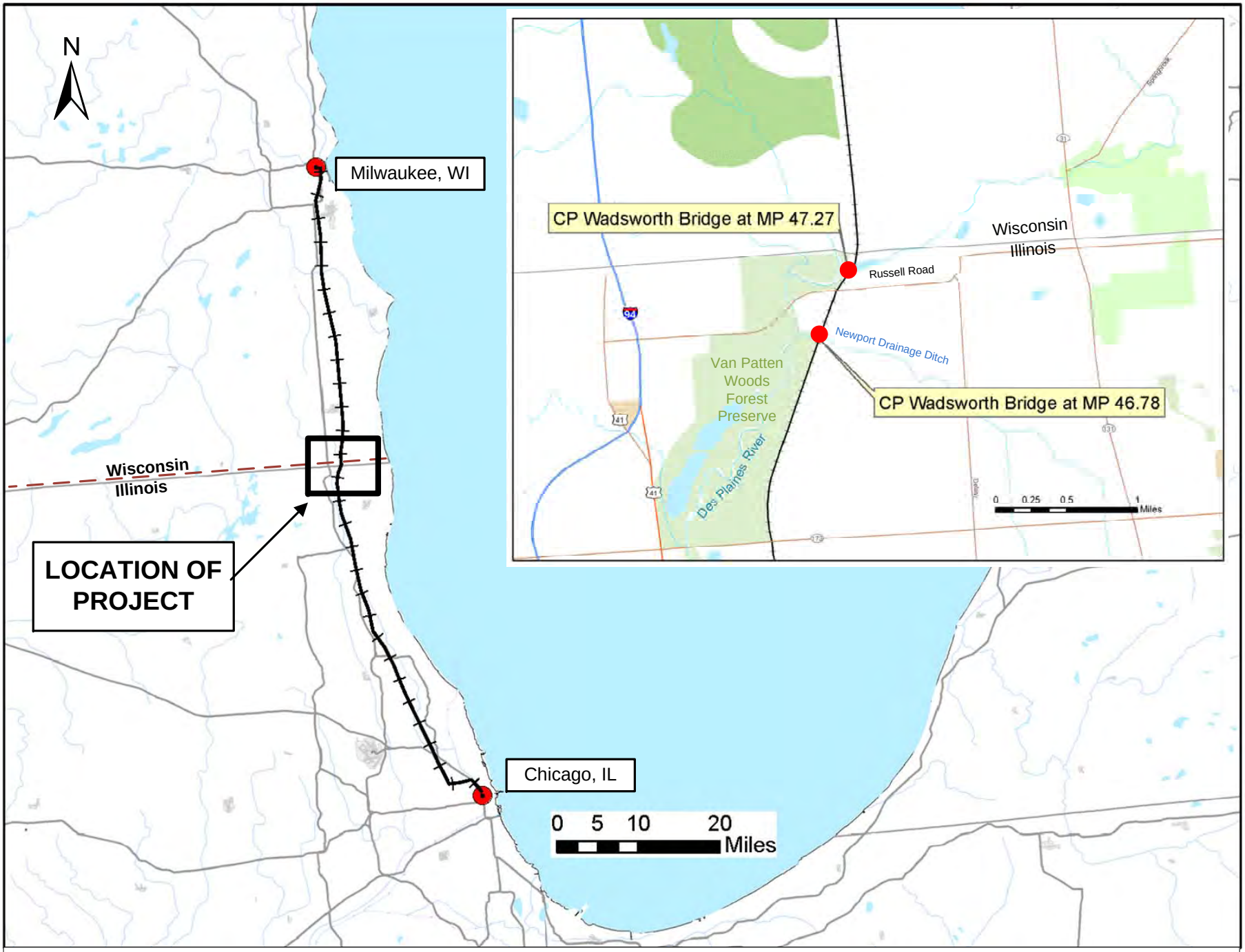

CP Wadsworth Bridge Replacements
Project Location Map

QUANDEL

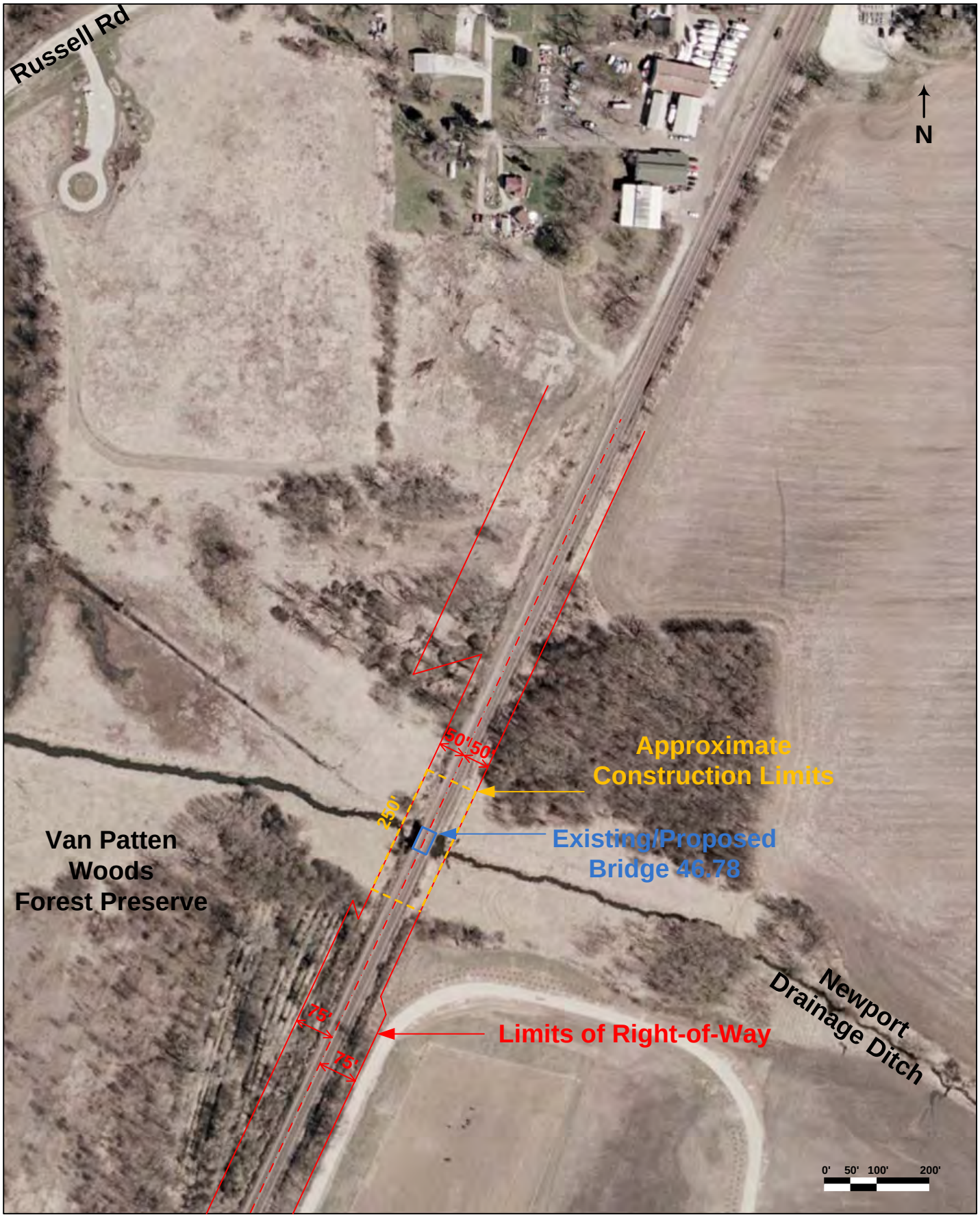

CP Bridge 46.78
Construction Limits and Right-of-Way Map

CP Bridge 47.27
Construction Limits and Right-of-Way Map

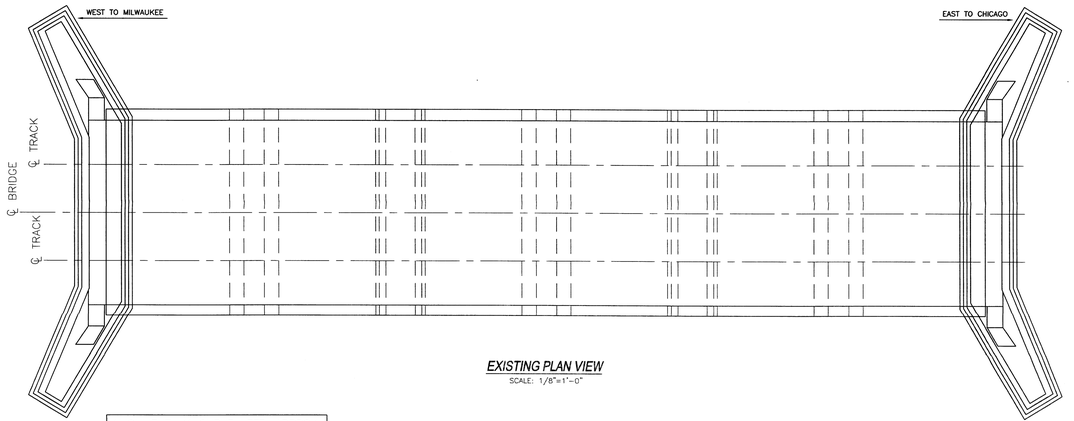

EXISTING PLAN VIEW
SCALE: 1/8"=1'-0"

ALIGNMENT: 1° CURVE LEFT, APPROX.
GRADE: 0.17% RISING WEST

NOTE: WATER LEVEL SHOWN IS THE 100 YEAR RECURRENCE WITH BACKUP FROM THE DES PLAINES RIVER

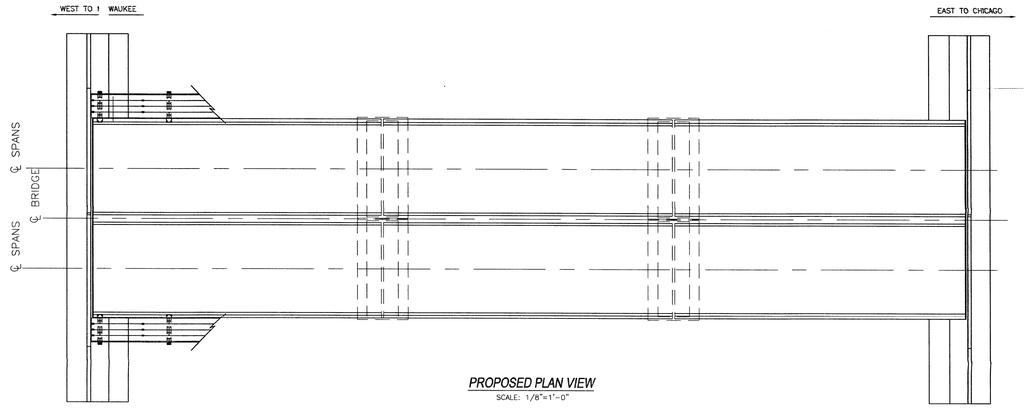

PROPOSED PLAN VIEW
SCALE: 1/8"=1'-0"

ALIGNMENT: 1° CURVE LEFT, APPROX.
GRADE: 0.17% RISING WEST

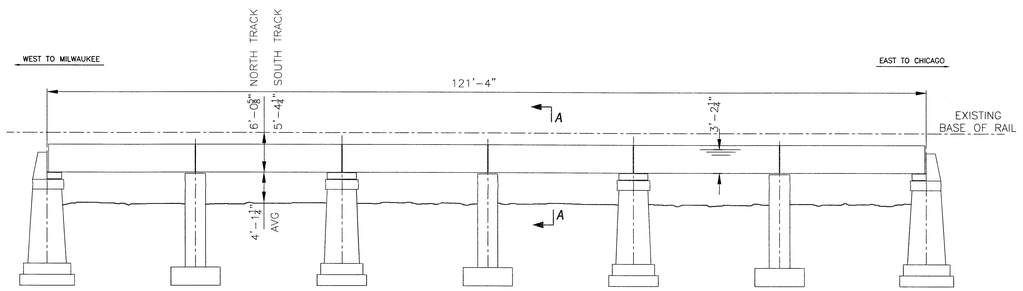

EXISTING ELEVATION
SCALE: 1/8"=1'-0"

EXISTING WATERWAY.
OPENING 416. SQ.FT.

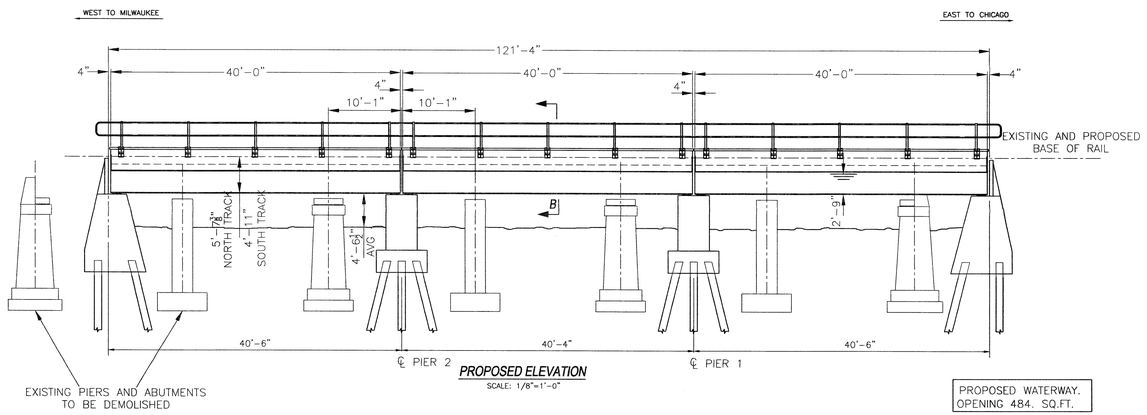

PROPOSED ELEVATION
SCALE: 1/8"=1'-0"

PROPOSED WATERWAY.
OPENING 484. SQ.FT.

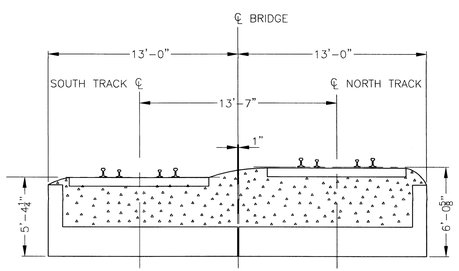

SECTION A-A
SCALE: 1/4"=1'-0"

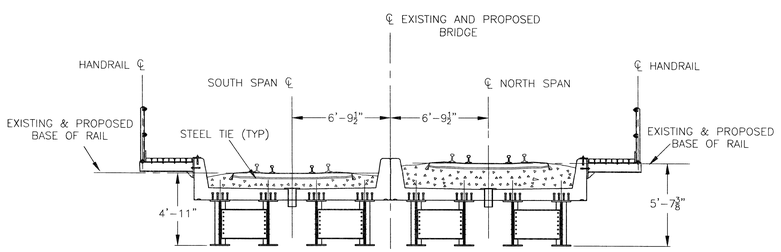

SECTION B-B
SCALE: 1/4"=1'-0"

LIST OF PLANS:

DRAWING NO.:	DESCRIPTION:
B-1-5392-1	BRIDGE RECONSTRUCTION GENERAL ARRANGEMENT
B-1-5392-2	40'-0" BDPG SPAN STEELWORK DETAILS
B-1-5392-3	40'-0" BDPG SPAN CONCRETE DECK
B-1-5392-4	WALKWAY DETAILS
B-1-5392-5	WALKWAY DETAILS
B-1-5392-6	BRIDGE RECONSTRUCTION EAST ABUTMENT
B-1-5392-7	BRIDGE RECONSTRUCTION WEST ABUTMENT
B-1-5392-8	BRIDGE RECONSTRUCTION PIER

REFERENCE PLANS:

DRAWING NO.:	DESCRIPTION:	
ALBUM 29A P12	PLAN OF MASONARY	1892
ALBUM 148B P12	6-20' SPANS DOUBLE TRACK REINF. CONC. TRESTLE	1909
ALBUM 119 P33	CONCRETE REPAIRS	1966

No.	DATE	REVISION	BY
	DEC 7/09	SIGNED AND ISSUED	

CANADIAN PACIFIC
Engineering Services - Structures & Projects
STRUCTURES PLANNING & DESIGN
CALGARY, ALBERTA

BR.47.27 C&M SUB. CHICAGO SERVICE AREA

BRIDGE RECONSTRUCTION GENERAL ARRANGEMENT

DWG. BY: BB CHK BY: JAW
OFFICE FILE: XB-C&M-47.27
SCALE: AS SHOWN
DATE: DEC 7, 2009
PLAN No. B-1-5392-1
ENGINEER
MANAGER, STRUCTURES PLANNING & DESIGN

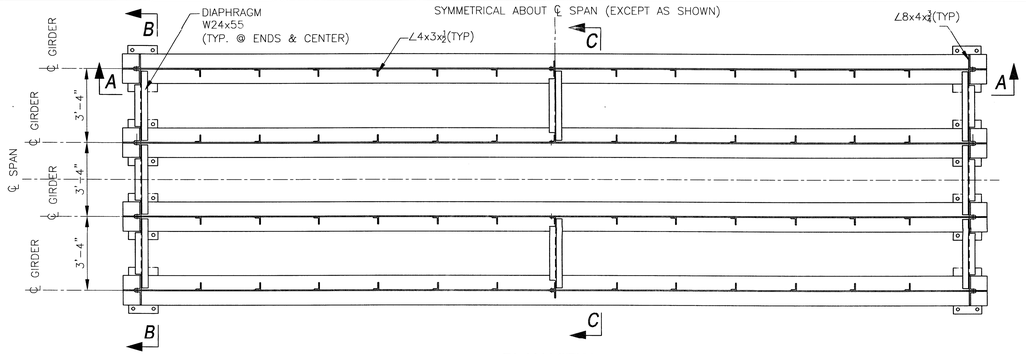

PLAN VIEW

6 REQ'D–TOP FLANGES OMITTED FOR CLARITY
SCALE: 3/8"=1'-0"

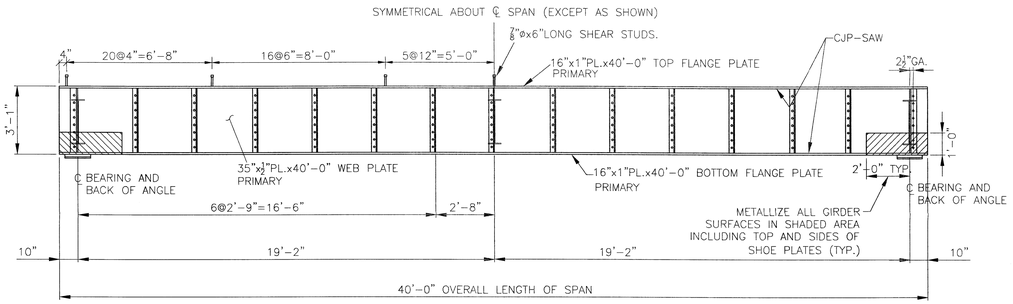

SECTION A-A

SCALE: 3/8"=1'-0"

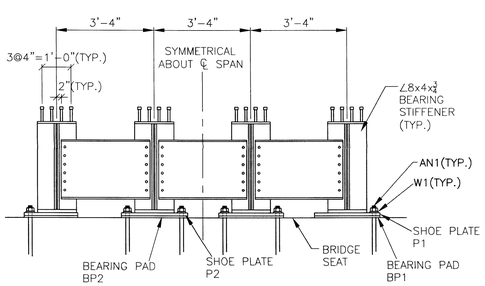

SECTION B-B

SCALE: 1/2"=1'-0"

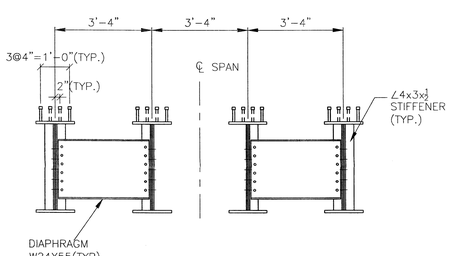

SECTION C-C

SCALE: 1/2"=1'-0"

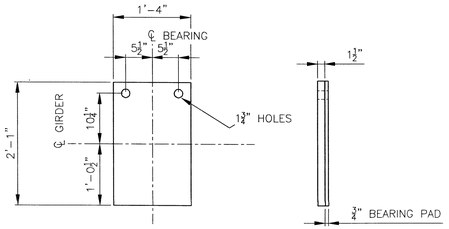

16"x1½PL. x 2'-1" SHOE PLATE -P1

4 REQUIRED 170 lbs EACH (METALLIZED)

16x¾x2'-1" BEARING PAD-BP1

4 REQUIRED
SCALE: 1"=1'-0"

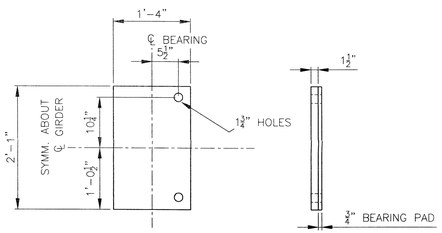

16"x1½PL. x 2'-1" SHOE PLATE -P2

4 REQUIRED 170 lbs EACH (METALLIZED)

16x¾x2'-1" BEARING PAD -BP2

4 REQUIRED
SCALE: 1"=1'-0"

ALL QUANTITIES ARE PER SPAN.
WEIGHT OF STEEL: 34,730 LBS PER SPAN.
6 SPANS REQUIRED. BALLAST PLATES SHOWN ON DRAWING B–1–5392–3 ALSO TO BE SUPPLIED BY FABRICATOR.

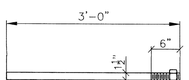

1 1/2"Ø x 3'-0" ANCHOR BOLT - AN1

16 REQUIRED 19 lbs. EACH (GALVANIZED)
SCALE: 1"=1'-0"

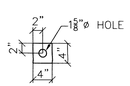

4"x1/2"PL.x4" WASHER PLATE - W1

16 REQUIRED 2 lbs. EACH (GALVANIZED)
SCALE: 1"=1'-0"

GENERAL NOTES FOR BDPG STEEL SPANS:

DESIGN LOADING: COOPER'S E–90 OR THE ALTERNATE LIVE LOAD WITH DIESEL IMPACT.

SPECIFICATIONS: A.R.E.M.A. MANUAL CHAPTER 15, LATEST EDITION. AWS D1.5, LATEST EDITION.

STEEL: A COPY OF ALL MILL CERTIFICATES IS TO BE SUBMITTED TO THE C.P.R. PRIOR TO COMMENCING FABRICATION. COILED STEEL WILL NOT BE PERMITTED.

PRIMARY STEEL MEMBERS: PRIMARY MEMBERS SHALL BE DESIGNATED AS SUCH ON THE SHOP DRAWINGS. STEEL DESIGNATED AS PRIMARY SHALL MEET THE REQUIREMENTS OF ASTM A709 GRADE 50WT3. ASTM A588 GRADES A, B OR C MAY BE USED PROVIDED CHARPY V–NOTCH TESTING IN ACCORDANCE WITH ASTM A673 MEETS THE REQUIREMENTS OF A.R.E.M.A. CHAPTER 15 TABLE 15–1–2 FOR ZONE 3 WITH A MINIMUM SERVICE TEMPERATURE OF –60 DEGREES FAHRENHEIT.

OTHER STEEL MEMBERS: OTHER STEEL MEMBERS SHALL MEET THE REQUIREMENTS OF ASTM A709 GRADE 50W OR ASTM A588 GRADE 50. ANCHOR BOLTS, WASHERS AND DECK DRAINS SHALL MEET THE REQUIREMENTS OF ASTM A36 OR APPROVED EQUAL.

SHEAR STUDS: TO BE IN ACCORDANCE WITH ASTM A108 LATEST EDITION, AND ARE TO BE 7/8 INCHES IN DIAMETER AND 6 INCHES LONG.

CLEANING OF STEEL: AREAS TO BE METALLIZED SHALL BE CLEANED IN ACCORDANCE WITH S.S.P.C. SPECIFICATION SP–10, "NEAR WHITE BLAST CLEANING". ALL OTHER AREAS TO BE CLEANED IN ACCORDANCE WITH S.S.P.C. SPECIFICATION SP–2, "HAND TOOL CLEANING" EXCEPT AS REQUIRED FOR WELDING.

HOLES: ARE TO BE 15/16 INCHES IN DIAMETER UNLESS NOTED OTHERWISE AND ARE TO BE DRILLED FULL SIZE OR SUB–DRILLED 11/16 INCHES IN DIAMETER AND REAMED FULL SIZE.

BOLTED CONNECTIONS: ARE TO BE MADE USING 7/8 INCH HIGH STRENGTH STEEL BOLTS. BOLTS SHALL MEET THE REQUIREMENTS OF ASTM A325M TYPE 3 (WITH ATMOSPHERIC CORROSION RESISTING PROPERTIES). WASHERS ARE TO BE FLAT OR BEVELED AS REQUIRED. SUBSTANTIATING CERTIFICATION SHALL BE PROVIDED FOR THE BOLTS AND NUTS.

WELDING: SPLICES ARE NOT PERMITTED. WELD METAL SHALL HAVE CORROSION RESISTING PROPERTIES COMPARABLE TO THAT OF THE PARENT METAL. FLUX CORE WELDING WILL BE PERMITTED PROVIDED H8 OR LOWER DESIGNATION ELECTRODES ARE USED FOR THE FCAW WELDS.

INSPECTION: INSPECTION AND QUALITY CONTROL SHALL BE PROVIDED BY THE FABRICATOR IN ACCORDANCE WITH AWS D1.5. THE FOLLOWING QUALITY ASSURANCE TESTING WILL BE CARRIED OUT BY THE C.P.R. OR ITS INSPECTION REPRESENTATIVE AT C.P.R. EXPENSE:

– 100% OF THE FLANGE TO WEB JOINTS TO BE TESTED BY THE ULTRASONIC TEST METHOD.
– 25% OF ALL FILLET WELDS TO BE TESTED BY THE MAGNETIC PARTICLE TEST METHOD.

METALLIZING: TO BE IN ACCORDANCE WITH AWS C2.2 WITH A MINIMUM THICKNESS OF ZINC COATING OF 150 MICRONS.

PAINTING: METALLIZED SURFACES EXCEPT FOR THOSE SURFACES COVERED AND SEALED BY PLATES OR OTHER MEMBERS, ARE TO BE COATED WITH AN APPROVED WATERBORNE ACRYLIC OR OTHER LOW VISCOSITY (MINIMUM 70% SOLIDS BY VOLUME) EPOXY COATING TO A MINIMUM DRY FILM THICKNESS OF 50 MICRONS. THE TOP COAT SHALL MATCH THE COLOUR OF THE OXIDIZED STEEL. APPLICATION TO THE ZINC SURFACE IS TO BE IN ACCORDANCE WITH THE MANUFACTURER'S RECOMMENDATIONS.

GALVANIZING: MATERIAL WHERE NOTED IS TO BE GALVANIZED IN ACCORDANCE WITH ASTM STANDARD A123 WITH A MINIMUM ZINC COATING OF 6 oz./sq. ft.

BEARING PADS: SHALL BE 100% VIRGIN POLYISOPRENE (NATURAL RUBBER) IN ACCORDANCE WITH THE A.R.E.M.A. MANUAL, CHAPTER 15 WITH 60 DUROMETER HARDNESS. BEARING PADS SHALL BE BONDED TO THE SHOE PLATES USING AN APPROVED ADHESIVE SUCH AS REMA SC–200 CEMENT.

ERECTION MARKS: ARE TO BE PAINTED IN LOCATIONS NOT READILY VISIBLE AFTER ERECTION.

ASSEMBLY: THE SPAN IS TO BE SHIPPED FULLY ASSEMBLED AND THE FABRICATOR SHALL BE RESPONSIBLE FOR PROVIDING METHODS AND EQUIPMENT FOR PREVENTION OF INJURY CAUSED BY POTENTIAL TRIPPING HAZARDS FROM THE SHEAR STUDS.

CONCRETE DECK: CONSTRUCTION OF THE CONCRETE DECK IS NOT INCLUDED IN THE FABRICATOR'S SCOPE OF WORK.

FOR CONCRETE DECK SEE DRAWING B–1–5392–3.

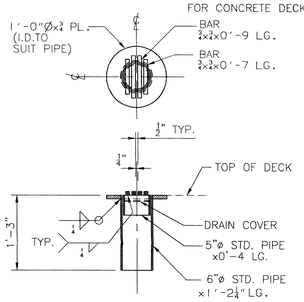

DECK DRAIN - DR1

3 REQUIRED 52 lbs EACH(GALVANIZED)
SCALE: 1"=1'-0"

No.	DATE	REVISION	BY
	DEC 7/09	SIGNED AND ISSUED	

CANADIAN PACIFIC
Engineering Services - Structures & Projects
STRUCTURES PLANNING & DESIGN
CALGARY, ALBERTA

BR.47.27 C&M SUB. CHICAGO SERVICE AREA

40'-0" BDPG SPAN STEELWORK DETAILS

DWG. BY: BB CHK BY: JAW
OFFICE FILE: XB–C&M–47.27
SCALE: AS SHOWN
DATE: DEC 7, 2009
ENGINEER
MANAGER, STRUCTURES PLANNING & DESIGN
PLAN No. B-1-5392-2

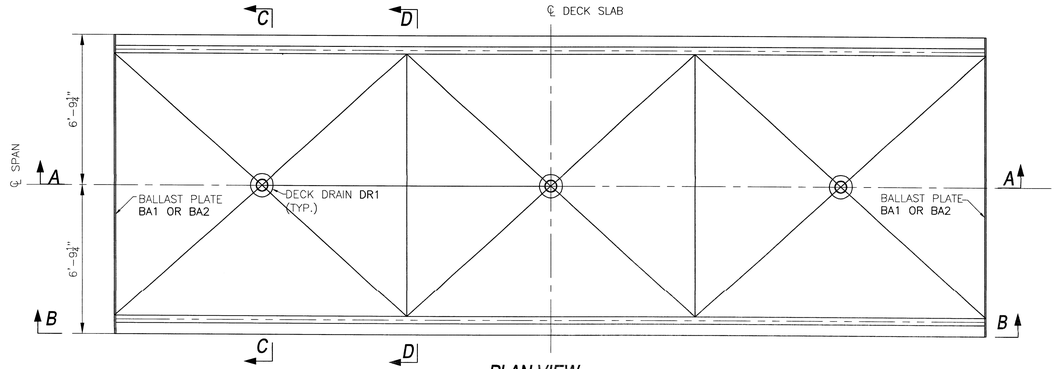

PLAN VIEW

SCALE: 3/8"=1'-0"

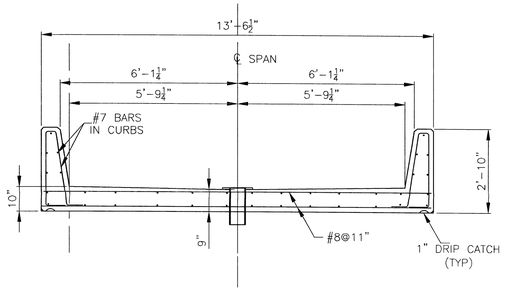

SECTION C-C

SCALE: 1/2"=1'-0"

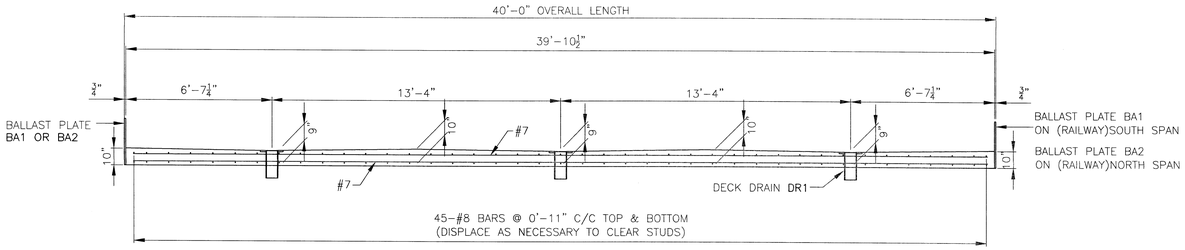

SECTION A-A

SCALE: 3/8"=1'-0"

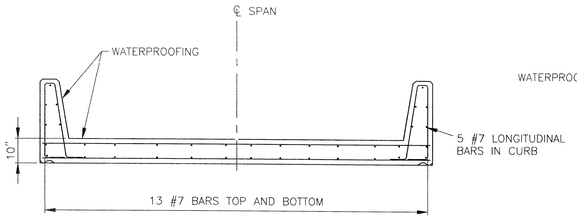

SECTION D-D

SCALE: 1/2"=1'-0"

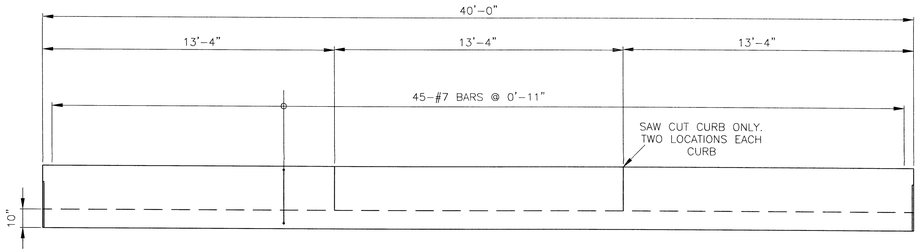

SECTION B-B

SCALE: 3/8"=1'-0"

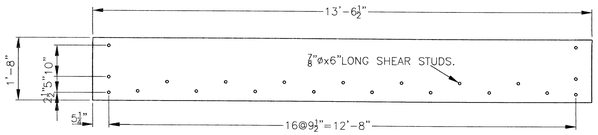

20"x¾"x13'-6½" - BA1

2 REQ'D FOR EA. OF 3 SPANS 720 lbs EACH (GALVANIZED)

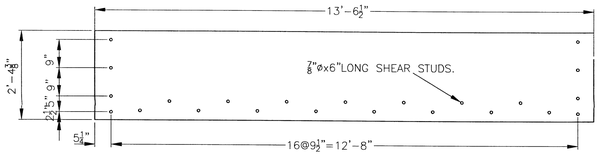

28⅜"x¾"x13'-6½" - BA2

2 REQ'D FOR EA. OF 3 SPANS 1010 lbs EACH (GALVANIZED)

SCALE: 1/2"=1'-0"

GENERAL NOTES FOR BDPG SPAN CONCRETE DECKS

DESIGN LOADING: COOPER'S E-90 WITH DIESEL IMPACT.

SPECIFICATIONS: A.R.E.M.A. MANUAL CHAPTER 8, LATEST EDITION.

CONCRETE: TO HAVE A MINIMUM COMPRESSIVE STRENGTH OF 5000 psi IN 28 DAYS. CONCRETE MATERIALS, MIX DESIGN, TESTING AND CONSTRUCTION TO BE IN ACCORDANCE WITH PART 1 OF THE A.R.E.M.A. MANUAL, CHAPTER 8. CONCRETE TO BE MADE USING LOW ALKALI TYPE I PORTLAND CEMENT IN ACCORDANCE WITH ASTM C150 WITH LESS THAN 0.6% SODIUM EQUIVALENTS. THE MAXIMUM WATER TO CEMENT RATIO IS TO BE IN ACCORDANCE WITH SECTION 1.12.3 OF CHAPTER 8. AN AIR ENTRAINING AGENT SHALL BE USED AND THE AIR CONTENT IS TO BE 5% TO 8%. THE MAXIMUM SIZE OF AGGREGATE IS TO BE 3/4 INCH. THE CHAMFER ON EXPOSED EDGES IS TO BE ONE INCH. THE SLUMP AT THE POINT OF DISCHARGE SHALL BE A MINIMUM OF 2 INCHES AND A MAXIMUM OF 4 INCHES.

IF THE USE OF LOW ALKALI PORTLAND CEMENT IS NOT PRACTICAL, THEN THE USE OF PROVEN NON-REACTIVE AGGREGATES OR AN APPROPRIATE SUPPLEMENTARY CEMENTING MATERIAL IS ACCEPTABLE TO PRECLUDE DELETERIOUS CONCRETE EXPANSION. NON-REACTIVE AGGREGATES SHALL BE FROM A QUARRY APPROVED BY THE STATE DEPARTMENT OF TRANSPORTATION BASED ON PETROGRAPHIC ANALYSIS BY A QUALIFIED LABORATORY. TYPES II OR III CEMENT MAY BE USED IF APPROVED BY THE ENGINEER.

REINFORCING STEEL: SHALL BE DEFORMED BARS IN ACCORDANCE WITH ASTM A615, LATEST EDITION, GRADE 60. WELDING OF REINFORCEMENT IS PROHIBITED. THE MINIMUM CONCRETE COVER SHALL BE 2 INCHES EXCEPT AT THE BOTTOM SURFACE OF THE DECK SLAB WHERE THE COVER SHALL BE 1-1/2 INCHES.

DECK SLAB SURFACE: THE TOP OF THE DECK SLAB IS TO BE WOOD TROWEL FINISHED.

WATERPROOFING: THE DECK IS TO BE INSPECTED BEFORE APPLYING WATERPROOFING. ANY VOIDS ON THE DECK OR CURB ARE TO BE FILLED. THE SURFACE ROUGHNESS OF THE CONCRETE IS TO BE IN ACCORDANCE WITH THE A.R.E.M.A. MANUAL, CHAPTER 9, PART 29, CLAUSE 29.14.3.4a (2).DECK WATERPROOFING SHALL BE APPLIED TO THE TOP SURFACE OF THE DECK SLAB AND TO THE INSIDE SURFACE OF EACH CURB. THE WATERPROOFING MEMBRANE SHALL BE APPLIED ON TOP OF A PRIMER COMPATIBLE WITH THE SUBSTRATE AS RECOMMENDED BY THE MANUFACTURER OF THE MEMBRANE. THE MEMBRANE SHALL BE A 100% SOLVENT FREE, REACTIVE, COLD LIQUID SPRAY APPLIED SEAMLESS ELASTOMERIC MEMBRANE SYSTEM IN ACCORDANCE WITH PART 29 OF A.R.E.M.A. CHAPTER 8 AND SHALL BE APPLIED TO PROVIDE A TOTAL ELASTOMERIC MEMBRANE THICKNESS IN ACCORDANCE WITH THE MANUFACTURER'S RECOMMENDATIONS BUT NOT LESS THAN 80 MILS. THE WET FILM THICKNESS OF THE MEMBRANE SHALL BE CONFIRMED BY TESTING AT LEAST ONCE FOR EVERY 10 SQUARE METRES OF WATERPROOFED AREA.

WATERPROOFING MEMBRANE PROTECTION: TWO LAYERS OF 1/2 INCH THICK ASPHALT BOARDS IN ACCORDANCE WITH PART 29 OF A.R.E.M.A. CHAPTER 8 ARE TO BE APPLIED OVER THE MEMBRANE. ALL JOINTS BETWEEN ASPHALT BOARDS IN BOTH LAYERS ARE TO BE CAULKED WITH MATERIAL MEETING THE REQUIREMENTS OF PART 29 OF A.R.E.M.A. CHAPTER 8 AND THE RECOMMENDATIONS OF THE ASPHALT BOARD MANUFACTURER.

FOR DETAILS OF DECK DRAINS SEE DRAWING B-1-5392-2.

ESTIMATED QUANTITIES:

CONCRETE: 21 CU. YDS

No.	DATE	REVISION	BY
	DEC 7/09	SIGNED AND ISSUED	

CANADIAN PACIFIC
Engineering Services - Structures & Projects
STRUCTURES PLANNING & DESIGN
CALGARY, ALBERTA

BR.47.27 C&M SUB. CHICAGO SERVICE AREA

40'-0" BDPG SPAN CONCRETE DECK

DWG. BY: BB CHK BY: JAW
OFFICE FILE: XB-C&M-47.27
SCALE: AS SHOWN
DATE: DEC 7, 2009
PLAN No. B-1-5392-3
ENGINEER
MANAGER, STRUCTURES PLANNING & DESIGN

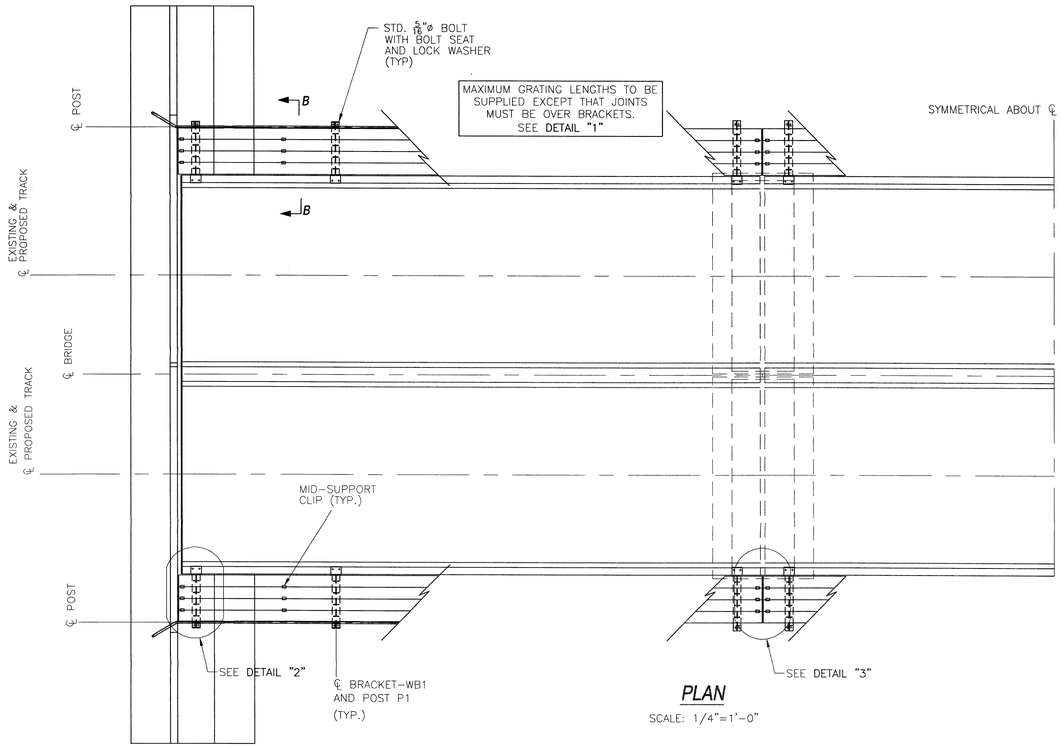

PLAN

SCALE: 1/4"=1'-0"

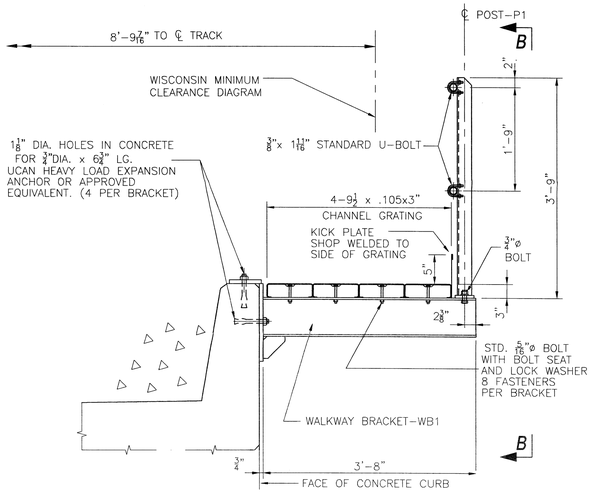

SECTION A-A

SCALE: 1"=1'-0"

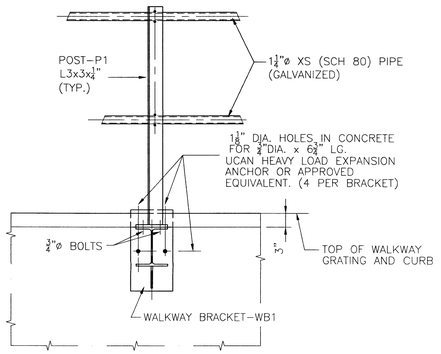

VIEW B-B

SCALE: 1"=1'-0"

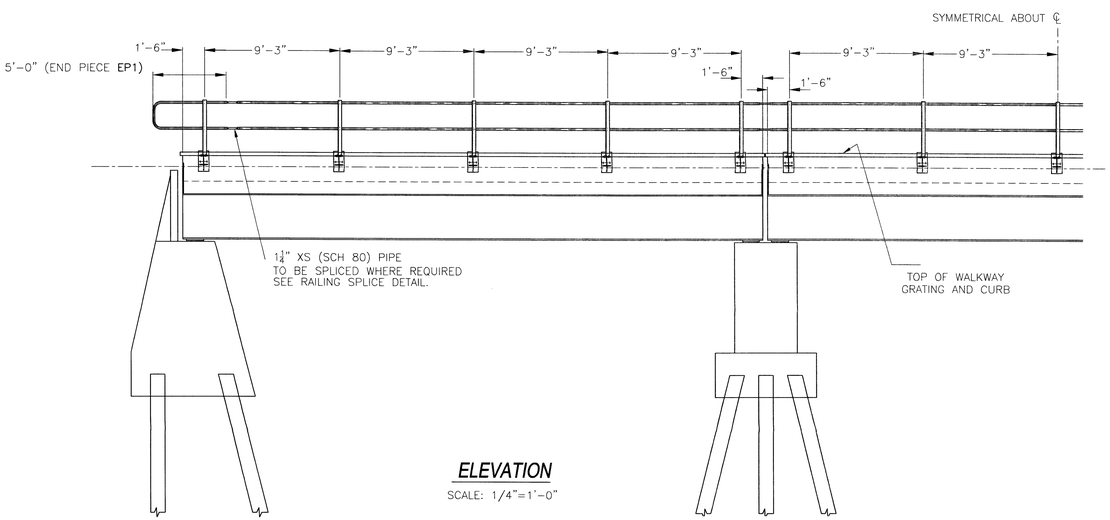

ELEVATION

SCALE: 1/4"=1'-0"

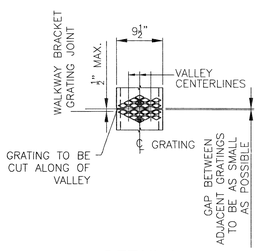

DETAIL 1

TYPICAL JOINT DETAIL FOR 9 1/2" WIDE CHANNEL GRATING

SCALE: 1"=1'-0"

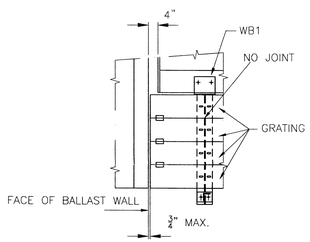

DETAIL 2

TYPICAL GRATING INSTALLATION AT ABUTMENT

SCALE: 1/2"=1'-0"

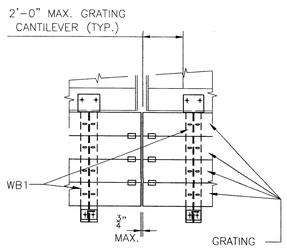

DETAIL '3'

TYPICAL GRATING INSTALLATION BETWEEN SPANS

SCALE: 3/4" = 1'-0

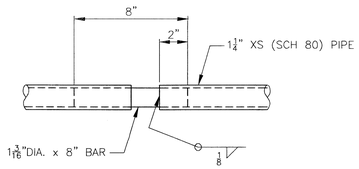

RAILING EXPANSION JOINT

AS REQUIRED

SCALE: 3"=1'-0"

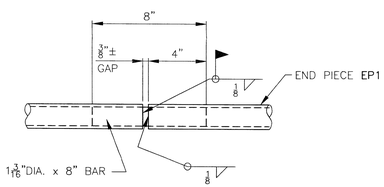

END PIECE JOINT

SCALE: 3"=1'-0"

No.	DATE	REVISION	BY
	DEC 7/09	SIGNED AND ISSUED	

CANADIAN PACIFIC

Engineering Services - Structures & Projects

STRUCTURES PLANNING & DESIGN

CALGARY, ALBERTA

BR.47.27 C&M SUB. CHICAGO SERVICE AREA

40'-0" BDPG SPAN WALKWAY DETAILS

DWG. BY: BB CHK BY: JAW OFFICE FILE: XB-C&M-47.27

ENGINEER

SCALE: AS SHOWN

DATE: DEC 7, 2009

MANAGER, STRUCTURE PLANNING & DESIGN

PLAN No. B-1-5392-4

GENERAL NOTES:

DESIGN LOADING:	GRATINGS – 85. LBS. PER SQ. FT.
	HAND RAILINGS AND POSTS – 200 LBS APPLIED IN ANY DIRECTION AT THE TOP OF RAIL.
STRUCTURAL STEEL:	TO BE IN ACCORDANCE WITH ASTM A36 OR APPROVED EQUIVALENT.
WELDING:	TO BE IN ACCORDANCE WITH AWS D1.5, LATEST EDITION.
GALVANIZING:	ALL STEEL IS TO BE GALVANIZED IN ACCORDANCE WITH ASTM A123, 2 OZ./SQ. FT. ENSURE FIT OF HAND RAILING COMPONENTS AFTER GALVANIZING.
CHANNEL GRATING:	TO BE I.S.G. DIAMOND GRIP CHANNEL GALVANIZED STEEL GRATINGS OR APPROVED EQUAL, COMPLETE WITH KICK PLATES, STANDARD BOLT SEATS, MID-SUPPORT CLIPS AND HOLD-DOWN BOLTS WITH LOCK NUT WASHERS AS SUPPLIED BY THE MANUFACTURER. ALL HARDWARE IS TO BE GALVANIZED.
MATCHMARKING:	THE FABRICATOR SHALL PROVIDE COMPLETE MATCH MARKING WITH A SUITABLE ERECTION DRAWING.
HIGH STRENGTH BOLTS:	TO BE SUPPLIED WITH THE WALKWAY.
REFLECTORIZED TAPE:	WHITE REFLECTORIZED TAPE SHALL BE HIGH INTENSITY GRADE.

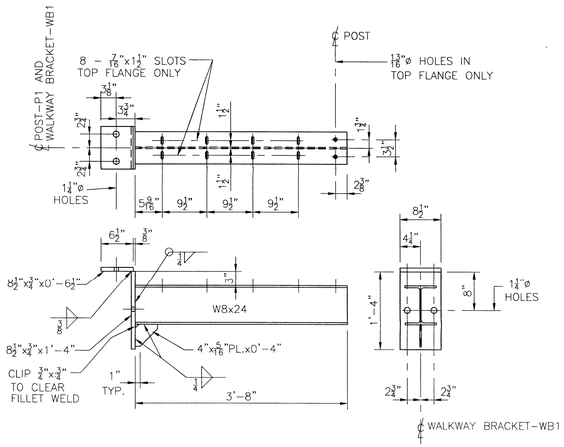

WALKWAY BRACKET - WB1

(GALVANIZED)
30 REQUIRED 130 lbs. EACH
SCALE: 1"=1'–0"

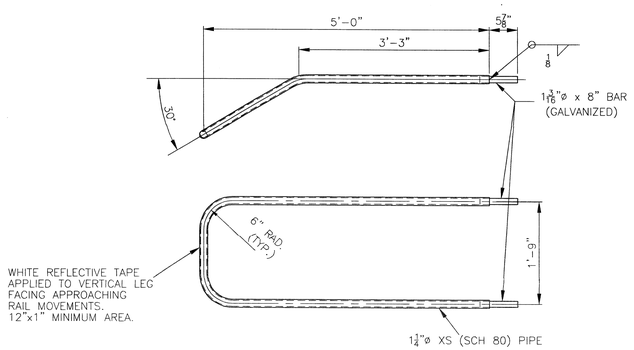

END PIECE - EP1

(GALVANIZED)
4 REQUIRED 42 LBS. EACH
SCALE: 1"=1'–0"

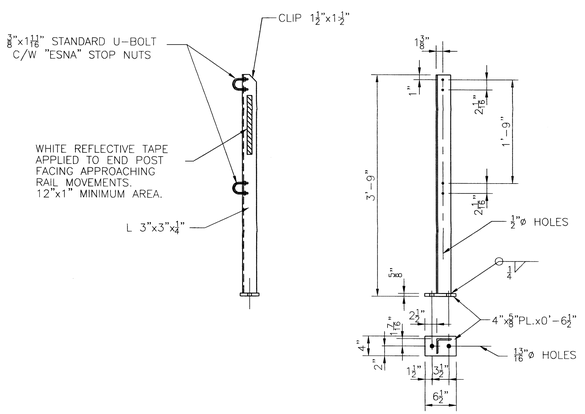

POST - P1

(GALVANIZED)
30 REQUIRED 24 lbs. EACH
SCALE: 1"=1'–0"

No.	DATE	REVISION	BY
	DEC 7/09	SIGNED AND ISSUED	

CANADIAN PACIFIC
Engineering Services - Structures & Projects
STRUCTURES PLANNING & DESIGN
CALGARY, ALBERTA

BR.47.27 C&M SUB. CHICAGO SERVICE AREA

40'-0" BDPG SPAN WALKWAY DETAILS

DWG. BY: BB CHK BY: JAW	OFFICE FILE: XB–C&M–47.27
ENGINEER	SCALE: AS SHOWN
	DATE: DEC 7, 2009
MANAGER, STRUCTURES PLANNING & DESIGN	PLAN No. B-1-5392-5

DIMENSIONS TO TRACKS
IN FRONT ELEVATIONS ARE BASED ON AN EXISTING TRACK CURVATURE OF 1° (APPROX)

BALLAST WALL HEIGHTS ARE TO THE BASE OF THE LOW RAIL.
BALLAST WALL MAY BE SUPERELEVATED AS REQUIRED

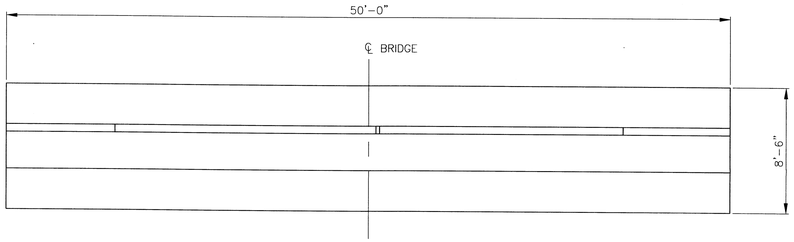

PLAN VIEW AT EAST ABUTMENT

SCALE: 1/4"=1'-0"

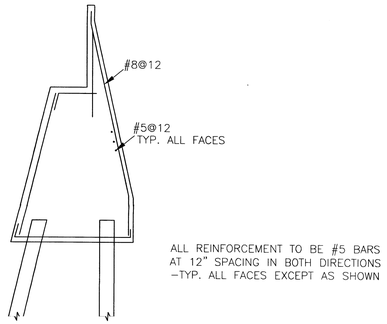

ALL REINFORCEMENT TO BE #5 BARS AT 12" SPACING IN BOTH DIRECTIONS –TYP. ALL FACES EXCEPT AS SHOWN

SECTION C-C

SCALE: 1/4"=1'-0"

CONSTRUCTION PROCEDURE:

1. CLOSE THE SOUTH TRACK TO TRAFFIC.
2. DRIVE TIMBER PILES. EXCAVATE, AND INSTALL TEMPORARY TIMBER SPANS AT EAST END OF THE NORTH TRACK IN ACCORDANCE WITH PLANS B-14-59 AND B-14-60 AS REQUIRED TO ENABLE CONSTRUCTION OF NEW EAST ABUTMENT UNDER TRAFFIC.
3. INSTALL TIMBER CURB TO RETAIN BALLAST AND REMOVE EXISTING CONCRETE SPANS FROM THE SOUTH TRACK
4. DRIVE PILES AND CONSTRUCT THE SOUTH HALF OF NEW WEST ABUTMENT AND ALL OF NEW EAST ABUTMENT AND PIERS AS SHOWN. LEAVE STRINGER POCKET IN BALLAST WALL OF EAST ABUTMENT AS SHOWN
5. INSTALL NEW SPANS ON THE SOUTH TRACK ALIGNMENT.
6. PROVIDE TEMPORARY SHORING AT NEW WEST ABUTMENT AND COMPLETE THE FILLS AT BOTH ABUTMENTS. THE FILL AT THE EAST END WILL THEN BE COMPLETE. THE FILL AT THE WEST END WILL BE UNDER THE SOUTH TRACK ONLY.
7. SHIFT TRAFFIC TO THE RECONSTRUCTED SPANS AND CLOSE THE NORTH TRACK TO TRAFFIC.
8. COMPLETE CONSTRUCTION OF THE BRIDGE UNDER THE NORTH TRACK
9. FILL THE STRINGER POCKET AT THE NEW EAST ABUTMENT, ALLOW TO CURE AND OPEN THE NORTH TRACK TO TRAFFIC

DATUM FOR ELEVATIONS TO BE THE SAME AS USED IN THE HYDRAULIC EVALUATION DATED APRIL 3, 2009

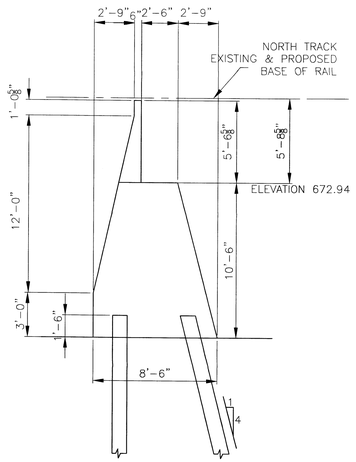

SECTION B-B

SCALE: 1/4"=1'-0"

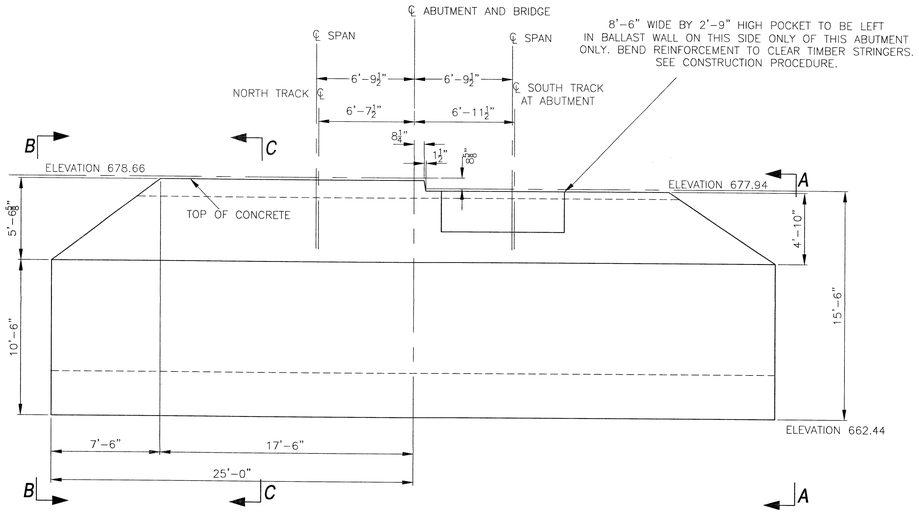

FRONT ELEVATION AT EAST ABUTMENT

SCALE: 1/4"=1'-0"

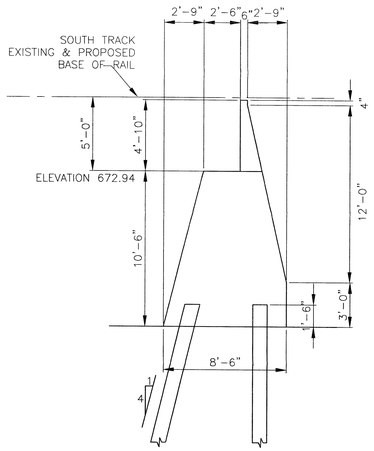

SECTION A-A

SCALE: 1/4"=1'-0"

FOR GENERAL NOTES, SEE DRAWING B-1-5392-7

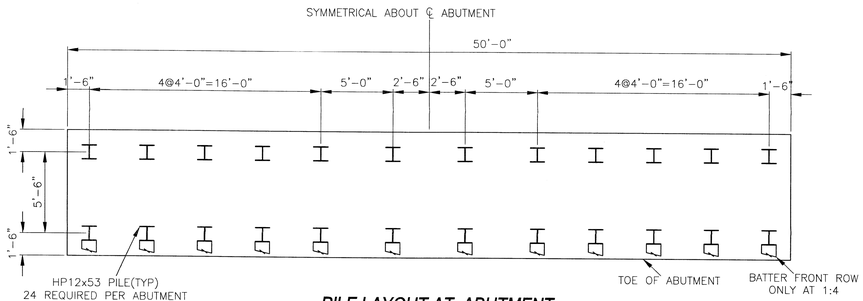

PILE LAYOUT AT ABUTMENT

SCALE: 1/4"=1'-0"

No.	DATE	REVISION	BY
	DEC 7/09	SIGNED AND ISSUED	

CANADIAN PACIFIC
Engineering Services - Structures & Projects
STRUCTURES PLANNING & DESIGN
CALGARY, ALBERTA

BR.47.27 C&M SUB. CHICAGO SERVICE AREA

BRIDGE RECONSTRUCTION EAST ABUTMENT

DWG. BY: BB CHK BY: JAW	OFFICE FILE: XB-C&M-47.27
ENGINEER	SCALE: AS SHOWN
	DATE: DEC 7, 2009
MANAGER, STRUCTURES PLANNING & DESIGN	PLAN No. B-1-5392-6

DIMENSIONS TO TRACKS
IN FRONT ELEVATIONS ARE BASED ON AN EXISTING TRACK CURVATURE OF 1° (APPROX)

BALLAST WALL HEIGHTS ARE TO THE BASE OF THE LOW RAIL. BALLAST WALL MAY BE SUPERELEVATED AS REQUIRED

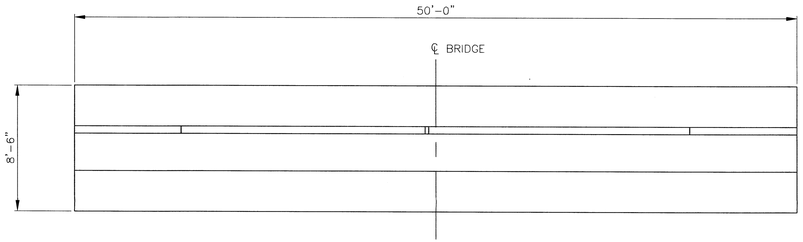

PLAN VIEW AT WEST ABUTMENT

SCALE: 1/4"=1'-0"

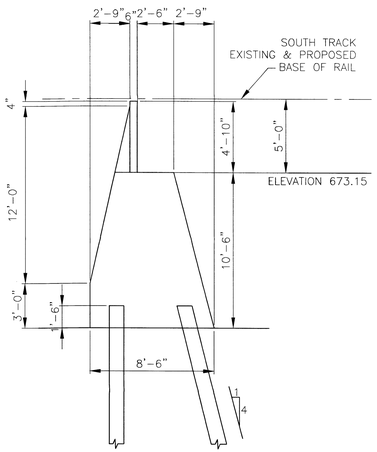

SECTION A-A

SCALE: 1/4"=1'-0"

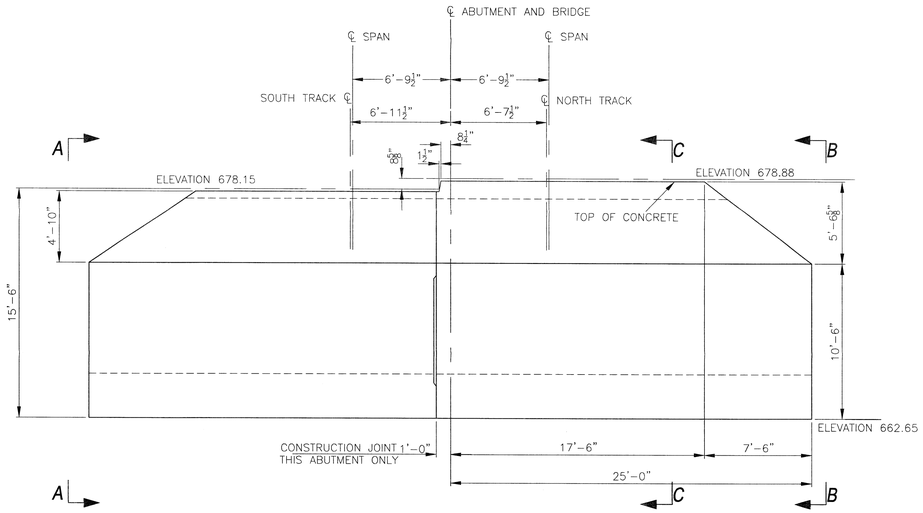

FRONT ELEVATION AT WEST ABUTMENT

SCALE: 1/4"=1'-0"

EXTEND REINFORCEMENT FROM SOUTH HALF OF ABUTMENT AND LAP TO NORTH HALF

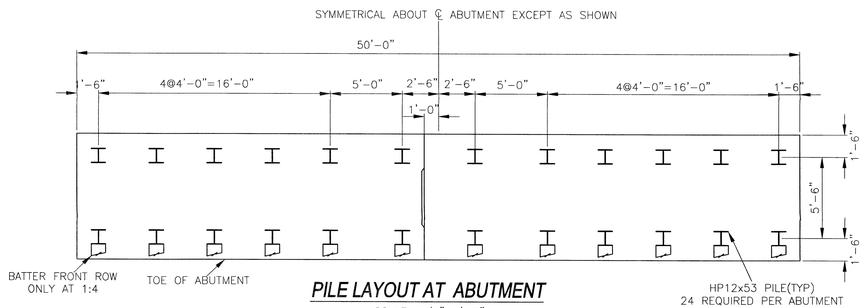

PILE LAYOUT AT ABUTMENT

SCALE: 1/4"=1'-0"

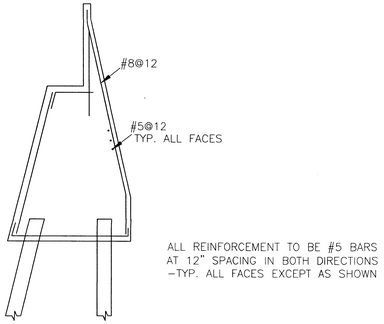

SECTION C-C

SCALE: 1/4"=1'-0"

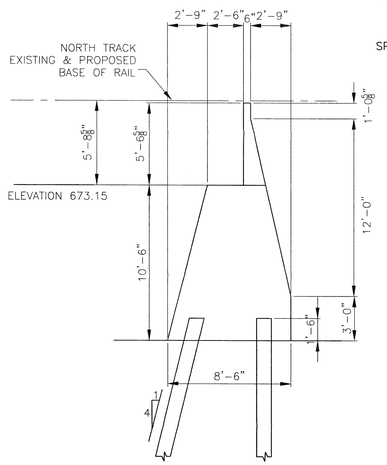

SECTION B-B

SCALE: 1/4"=1'-0"

GENERAL NOTES FOR CONCRETE PIERS AND ABUTMENTS

DESIGN LOADING: COOPER'S E-90 WITH DIESEL IMPACT.

SPECIFICATIONS: A.R.E.M.A. MANUAL CHAPTER 8, LATEST EDITION.

CONCRETE: TO HAVE A MINIMUM COMPRESSIVE STRENGTH OF 5000 psi IN 28 DAYS. CONCRETE MATERIALS, MIX DESIGN, TESTING AND CONSTRUCTION TO BE IN ACCORDANCE WITH PART 1 OF THE A.R.E.M.A. MANUAL, CHAPTER 8. CONCRETE TO BE MADE USING LOW ALKALI TYPE I PORTLAND CEMENT IN ACCORDANCE WITH ASTM C150 WITH LESS THAN 0.6% SODIUM EQUIVALENTS. THE MAXIMUM WATER TO CEMENT RATIO IS TO BE IN ACCORDANCE WITH SECTION 1.12.3 OF CHAPTER 8. AN AIR ENTRAINING AGENT SHALL BE USED AND THE AIR CONTENT IS TO BE 5% TO 8%. THE MAXIMUM SIZE OF AGGREGATE IS TO BE 3/4 INCH. THE CHAMFER ON EXPOSED EDGES IS TO BE ONE INCH. THE SLUMP AT THE POINT OF DISCHARGE SHALL BE A MINIMUM OF 2 INCHES AND A MAXIMUM OF 4 INCHES.

IF THE USE OF LOW ALKALI PORTLAND CEMENT IS NOT PRACTICAL, THEN THE USE OF PROVEN NON-REACTIVE AGGREGATES OR AN APPROPRIATE SUPPLEMENTARY CEMENTING MATERIAL IS ACCEPTABLE TO PRECLUDE DELETERIOUS CONCRETE EXPANSION. NON-REACTIVE AGGREGATES SHALL BE FROM A QUARRY APPROVED BY THE STATE DEPARTMENT OF TRANSPORTATION BASED ON PETROGRAPHIC ANALYSIS BY A QUALIFIED LABORATORY. TYPES II OR III CEMENT MAY BE USED IF APPROVED BY THE ENGINEER.

REINFORCING STEEL: SHALL BE DEFORMED BARS IN ACCORDANCE WITH ASTM A615, LATEST EDITION, GRADE 60. WELDING OF REINFORCEMENT IS PROHIBITED. THE MINIMUM CONCRETE COVER SHALL BE 2 INCHES EXCEPT AT SURFACES CAST AGAINST AND PERMANENTLY EXPOSED TO EARTH WHERE THE COVER SHALL BE 3 INCHES.

CONSTRUCTION JOINT TREATMENT: ROUGHEN SURFACE WHERE CONTACT WITH NEW CONCRETE IS TO BE MADE. APPLY AN EPOXY RESIN BASED BONDING SYSTEM MEETING A.S.T.M. SPECIFICATION C 881, TYPE 2, GRADE 2, WITH THE CLASS TO BE DETERMINED BY THE APPLICATION TEMPERATURE AS RECOMMENDED BY THE MANUFACTURER.

SPAN ANCHOR BOLTS: ARE TO BE GROUTED IN PLACE USING SIKA GROUT 212HP OR APPROVED EQUAL.

GEOTECHNICAL INVESTIGATION: A GEOTECHNICAL ENGINEERING ANALYSIS REPORT BY STS/AECOM IS AVAILABLE UPON REQUEST. THE C.P.R. DOES NOT WARRANT THE CONCLUSIONS IN THE REPORT AND THE CONTRACTOR SHALL MAKE HIS OWN ASSESSMENT OF GEOTECHNICAL CONDITIONS.

PILES: PILES SHALL BE HP12X53 STEEL SECTIONS WITH A MINIMUM YIELD STRENGTH OF 50 KSI.

PILE DRIVING AND SUPERVISION: PILES SHALL BE DRIVEN TO A MINIMUM SAFE WORKING CAPACITY OF 75 TONS. THE CONTRACTOR SHALL SUBMIT DETAILS OF THE ACTUAL PILE DRIVER, HELMET AND CUSHION TO BE USED PRIOR TO DRIVING PILES SO THAT STS/AECOM CAN VERIFY THEIR PILE CAPACITY CALCULATIONS. AN EXPERIENCED GEOTECHNICAL ENGINEER OR HIS REPRESENTATIVE SHALL WITNESS THE PILE DRIVING AND ALSO DOCUMENT PILE INFORMATION SUCH AS LENGTHS, ELEVATIONS AND DRIVING RESISTANCES. A COPY OF THIS DOCUMENTATION SHALL BE SUPPLIED TO THE C.P.R. THE FIRST PILE DRIVEN SHALL BE DYNAMICALLY MONITORED USING A PILE DRIVING ANALYZER (PDA). PILES THAT ARE NOT DRIVEN TO WITHIN THREE INCHES OF THEIR PLANNED POSITION OR TO WITHIN ONE INCH PER FOOT YARD OF THEIR SPECIFIED BATTER WILL NOT BE ACCEPTED.

PILE SPLICES: IT IS ANTICIPATED IN THE GEOTECHNICAL ENGINEERING ANALYSIS REPORT THAT PILE LENGTHS OF 70 FEET WILL BE REQUIRED IN ORDER TO ACHIEVE THE NECESSARY PILE CAPACITY. SPLICES SHOULD THEREFORE BE AVOIDED. IF SPLICES ARE REQUIRED THEN THERE SHOULD BE NO MORE THAN ONE SPLICE PER PILE. ANY SPLICES SHALL BE PLANNED TO OCCUR AT A MINIMUM DEPTH OF FIFTEEN FEET BELOW THE CUT-OFF ELEVATION. SPLICES SHALL BE FULL STRENGTH CJP WELDED SPLICES OR FULL STRENGTH COMMERCIAL SPLICES WITH DETAILS TO BE SUBMITTED BY THE CONTRACTOR FOR REVIEW AND ACCEPTANCE BY THE ENGINEER.

BACKFILL: SHALL BE COMPACTED FREE DRAINING GRANULAR MATERIAL SUCH AS PIT RUN GRAVEL OR CRUSHED STONE, TO THE APPROVAL OF THE ENGINEER.

THE LOCATION SHOWN FOR THE CONSTRUCTION JOINT AND THE PROCEDURE ASSUME THAT THE SOUTH HALF OF THE BRIDGE WILL BE BUILT FIRST. RELOCATE TO OTHER SIDE OF CENTER LINE OF ABUTMENT IF NORTH HALF IS BUILT FIRST.

DATUM FOR ELEVATIONS TO BE THE SAME AS USED IN THE HYDRAULIC EVALUATION DATED APRIL 3, 2009

No.	DATE	REVISION	BY
	DEC 7/09	SIGNED AND ISSUED	

CANADIAN PACIFIC
Engineering Services - Structures & Projects
STRUCTURES PLANNING & DESIGN
CALGARY, ALBERTA

BR.47.27 C&M SUB. CHICAGO SERVICE AREA

BRIDGE RECONSTRUCTION WEST ABUTMENT

DWG. BY: BB CHK BY: JAW OFFICE FILE: XB-C&M-47.27
SCALE: AS SHOWN
DATE: DEC 7, 2009
PLAN No. B-1-5392-7
ENGINEER
MANAGER, STRUCTURES PLANNING & DESIGN

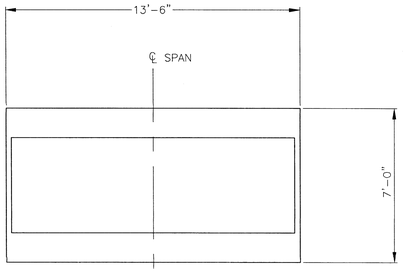

PLAN VIEW AT PIER

SCALE: 3/8"=1'-0"

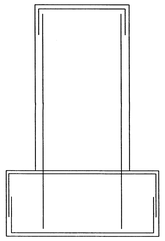

ALL REINFORCEMENT TO BE #5 BARS AT 12" SPACING IN BOTH DIRECTIONS -TYP ALL FACES

SECTION B-B

SCALE: 3/8"=1'-0"

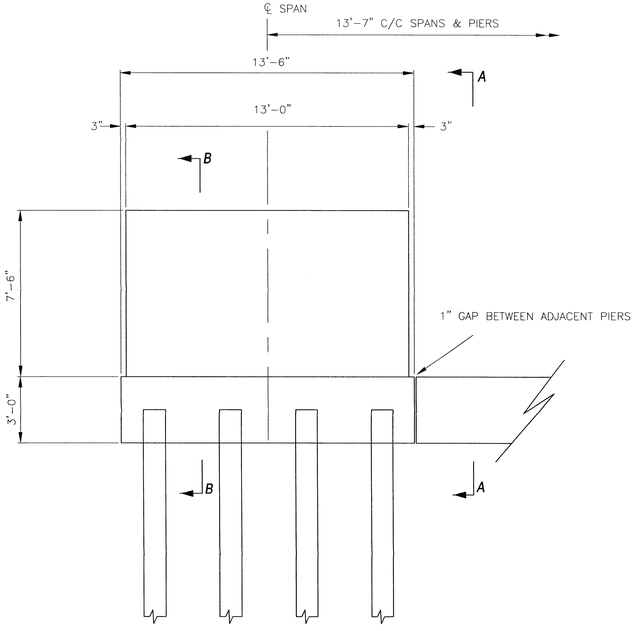

FRONT ELEVATION AT PIER

SCALE: 3/8"=1'-0"

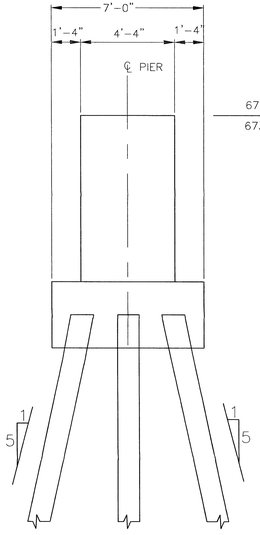

SECTION A-A

SCALE: 3/8"=1'-0"

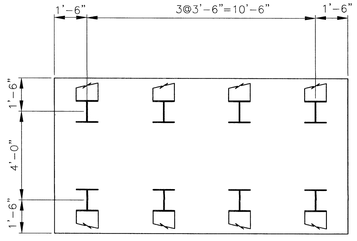

DIMENSIONS ARE AT UNDERSIDE OF FOOTING

PILE LAYOUT AT PIER

SCALE: 3/8"=1'-0"

FOR GENERAL NOTES, SEE DRAWING B-1-5392-7

No.	DATE	REVISION	BY
	DEC 7/09	SIGNED AND ISSUED	

CANADIAN PACIFIC
Engineering Services - Structures & Projects
STRUCTURES PLANNING & DESIGN
CALGARY, ALBERTA

BR.47.27 C&M SUB. CHICAGO SERVICE AREA

BRIDGE RECONSTRUCTION PIER

DWG. BY: BB CHK BY: JAW OFFICE FILE: XB-C&M-47.27
SCALE: AS SHOWN
DATE: DEC 7, 2009
PLAN No. B-1-5392-8

ENGINEER

MANAGER, STRUCTURES PLANNING & DESIGN

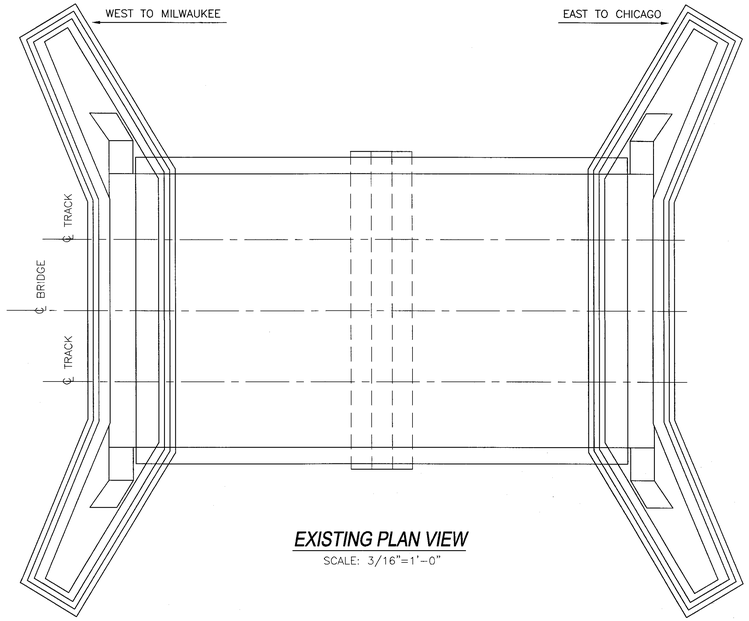

EXISTING PLAN VIEW

SCALE: 3/16"=1'-0"

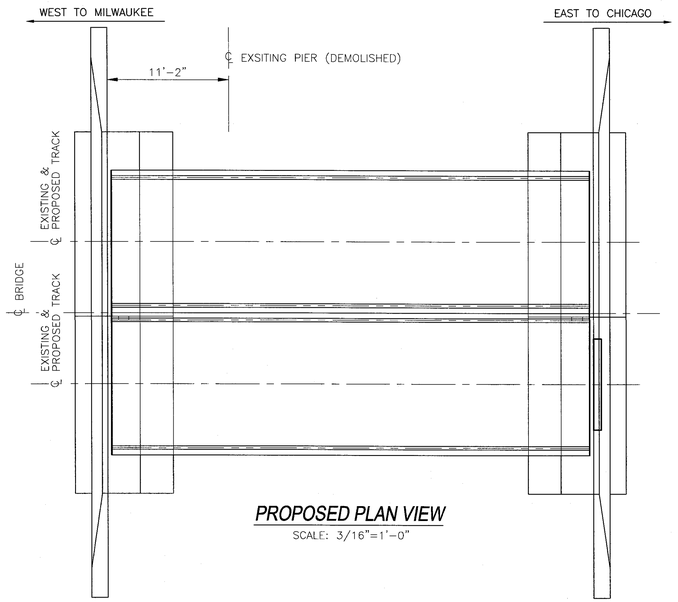

PROPOSED PLAN VIEW

SCALE: 3/16"=1'-0"

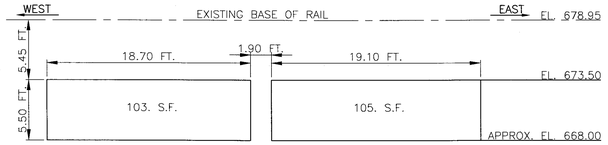

EXISTING BRIDGE OPENING

208. S.F.

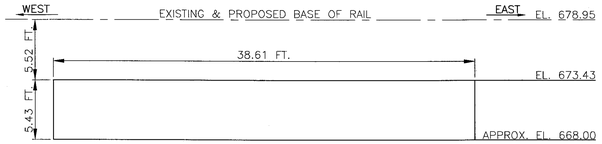

PROPOSED BRIDGE OPENING

210. S.F.

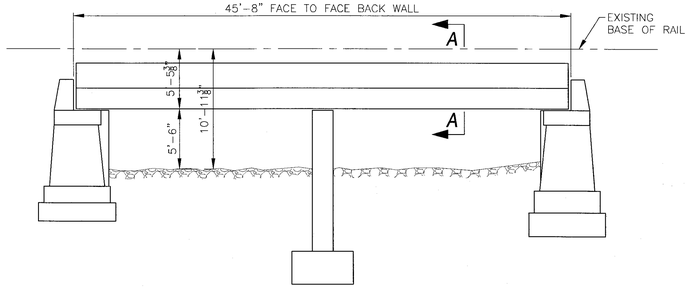

EXISTING ELEVATION

SCALE: 3/16"=1'-0"

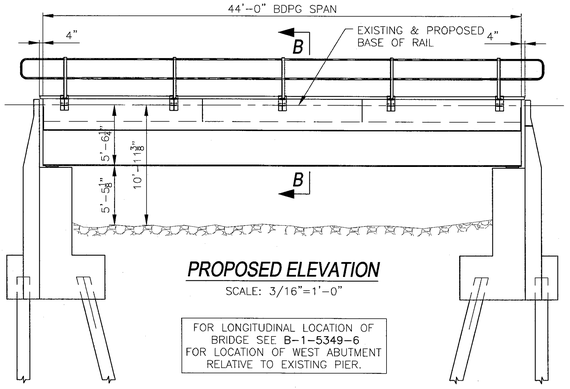

PROPOSED ELEVATION

SCALE: 3/16"=1'-0"

FOR LONGITUDINAL LOCATION OF BRIDGE SEE **B-1-5349-6**
FOR LOCATION OF WEST ABUTMENT RELATIVE TO EXISTING PIER.

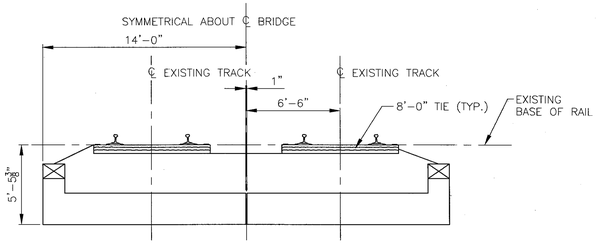

SECTION A-A

SCALE: 1/4"=1'-0"

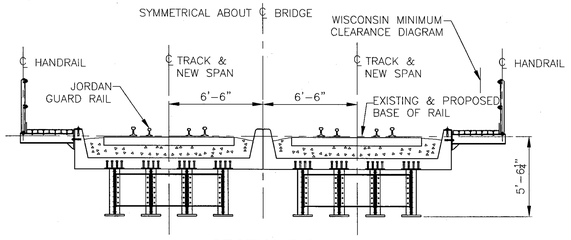

SECTION B-B

SCALE: 1/4"=1'-0"

LIST OF DRAWINGS:

DRAWING NO.:	DESCRIPTION:
B-1-5349-1	RECONSTRUCTION OF BRIDGE GENERAL ARRANGEMENT
B-1-5349-2	44'0" STEEL BDPG SPAN STEEL WORK
B-1-5349-3	44'0" STEEL BDPG SPAN DECK SLAB
B-1-5349-4	WALKWAY DETAILS SHEET 1 OF 2
B-1-5349-5	WALKWAY DETAILS SHEET 2 OF 2
B-1-5349-6	BRIDGE RECONSTRUCTION WEST ABUTMENT
B-1-5349-7	BRIDGE RECONSTRUCTION EAST ABUTMENT AND CONSTRUCTION DETAILS
B-14-59 & 60	E60 TREATED TIMBER TRESTLE

REFERENCE DOCUMENTS:

DRAWING NO.:	DESCRIPTION:	
A 29A, P 11, 5288-0	REPORT OF MASONRY, AS BUILT	1893
A 127B, P 49, C2851	REPLACE USING 19FT. SPANS	1908
----	GEOTECHNICAL ENGINEERING ANALYSIS BY STS/AECOM	2008
----	HYDRAULIC EVALUATION BY STS/AECOM	2008

No.	DATE	REVISION	BY
	Oct.21, 08	SIGNED AND ISSUED	

CANADIAN PACIFIC
Engineering Services - Structures & Projects
STRUCTURES PLANNING & DESIGN
CALGARY, ALBERTA

BR. 46.78 C&M SUB. CHICAGO SERVICE AREA

BRIDGE RECONSTRUCTION GENERAL ARRANGEMENT

DWG. BY: SG CHK BY: JAW
OFFICE FILE: XB-C&M-46.78
SCALE: AS SHOWN
DATE: OCT 21, 2008
ENGINEER
MANAGER, STRUCTURES PLANNING & DESIGN
PLAN No. **B-1-5349-1**

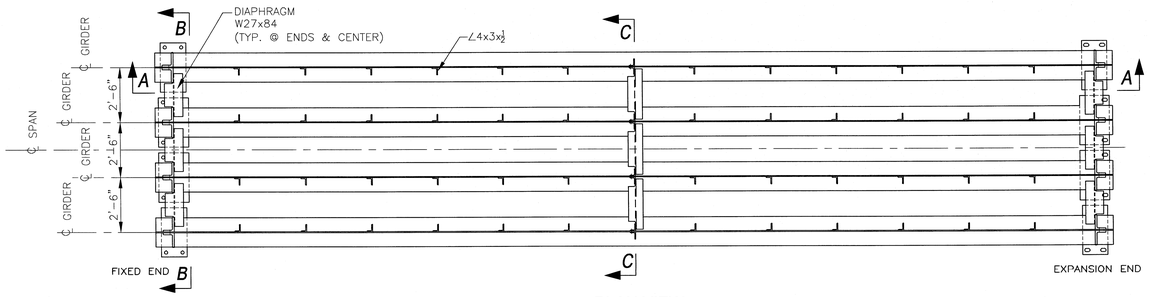

PLAN VIEW

TOP FLANGES OMITTED FOR CLARITY
SCALE: 3/8"=1'-0"

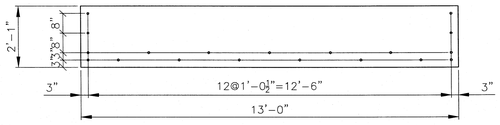

25"x3/4" PL. x 13'-0" BALLAST PLATE MK. BP1

2 REQUIRED (GALVANIZED)
830 lbs EACH
SCALE: 1"=1'-0"

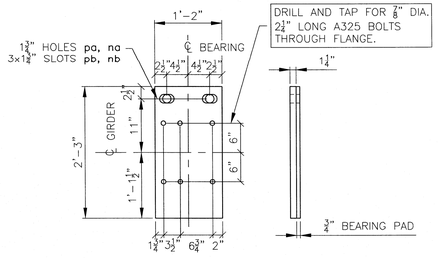

14"x1 1/4" PL. x 2'-3" SHOE PLATE MK. pa
14"x3/4" x 2'-3" BEARING PAD MK. na

2 REQUIRED 134 lbs pa (METALLIZED)
SCALE: 1"=1'-0"

14"x1 1/4" PL. x 2'-3" SHOE PLATE MK. pb
14"x3/4" x 2'-3" BEARING PAD MK. nb

2 REQUIRED 134 lbs pb (METALLIZED)
SCALE: 1"=1'-0"

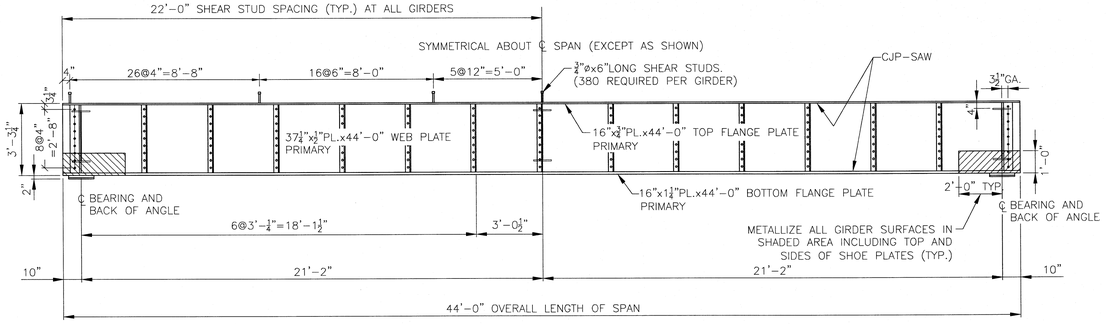

SECTION A-A

SCALE: 3/8"=1'-0"

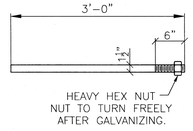

1 1/2"Ø x 3'-0" ANCHOR BOLT - MK. AN1

16 REQUIRED 20 lbs. EACH (GALVANIZED)
SCALE: 1"=1'-0"

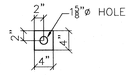

4"x1/2"PL.x4" WASHER PLATE - MK. W1

8 REQUIRED 2 lbs. EACH (GALVANIZED)
SCALE: 1"=1'-0"

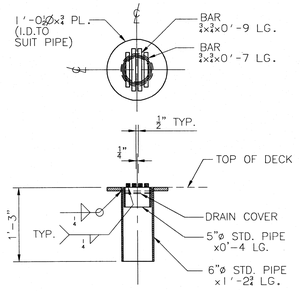

DECK DRAIN - MK. DR1

4 REQUIRED (GALVANIZED)
SCALE: 1"=1'-0"

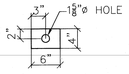

4"x1/2"PL.x6" WASHER PLATE - MK. W2

8 REQUIRED 3 lbs. EACH (GALVANIZED)
SCALE: 1"=1'-0"

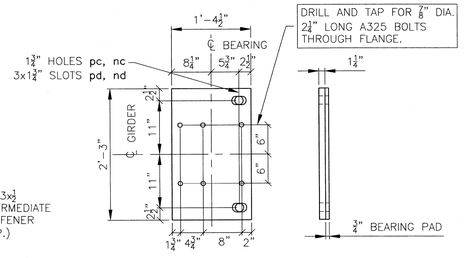

16 1/2"x1 1/4" PL. x 2'-3" SHOE PLATE MK. pc
16 1/2"x3/4" x 2'-3" BEARING PAD MK. nc

2 REQUIRED 158 lbs FOR pc (METALLIZED)
SCALE: 1"=1'-0"

16 1/2"x1 1/4" PL. x 2'-3" SHOE PLATE MK. pd
16 1/2"x3/4" x 2'-3" BEARING PAD MK. nd

2 REQUIRED 158 lbs FOR pd (METALLIZED)
SCALE: 1"=1'-0"

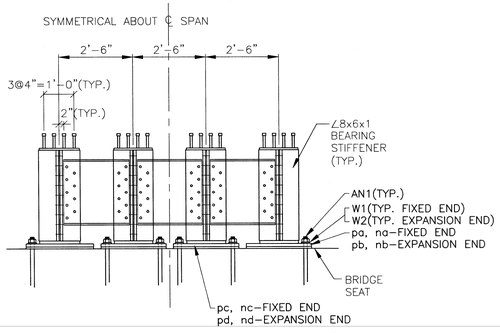

SECTION B-B

SCALE: 1/2"=1'-0"

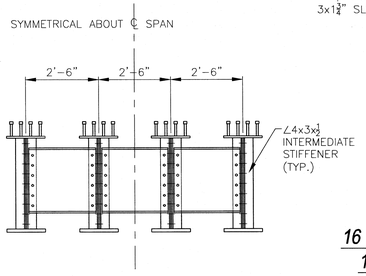

SECTION C-C

SCALE: 1/2"=1'-0"

GENERAL NOTES:

DESIGN LOADING: COOPER'S E-90 WITH ALTERNATE LIVE LOADING PLUS DIESEL IMPACT.

SPECIFICATIONS: AREMA MANUAL CHAPTER 15, LATEST EDITION; AND AWS D1.5, LATEST EDITION.

STEEL: A COPY OF ALL MILL CERTIFICATES IS TO BE SUBMITTED TO THE C.P.R. PRIOR TO COMMENCING FABRICATION.

PRIMARY STEEL MEMBERS: PRIMARY MEMBERS SHALL BE DESIGNATED AS SUCH ON THE SHOP DRAWINGS. STEEL DESIGNATED AS PRIMARY SHALL MEET THE MINIMUM REQUIREMENTS OF ASTM A709 GRADE 50WT3. ASTM A588 GRADES A, B OR C MAY BE USED PROVIDED CHARPY V-NOTCH TESTING IN ACCORDANCE WITH ASTM A673 MEETS THE REQUIREMENTS OF AREMA CHAPTER 15 TABLE 15-1-2 FOR A MINIMUM SERVICE TEMPERATURE OF MINUS 60 DEGREES F.

OTHER STEEL MEMBERS: OTHER STEEL MEMBERS SHALL MEET THE MINIMUM REQUIREMENTS OF ASTM A709 GRADE 50W OR ASTM A588 GRADE 50. ANCHOR BOLTS AND WASHERS SHALL MEET THE MINIMUM REQUIREMENTS OF ASTM A36 OR APPROVED EQUAL.

SHEAR STUDS: SHALL BE IN ACCORDANCE WITH ASTM A108 LATEST EDITION, AND ARE TO BE 3/4 INCHES IN DIAMETER AND 6 INCHES LONG.

CLEANING OF STEEL: AREAS TO BE METALLIZED SHALL BE CLEANED IN ACCORDANCE WITH S.S.P.C. SPECIFICATION SP-10, "NEAR WHITE BLAST CLEANING". ALL OTHER AREAS TO BE CLEANED IN ACCORDANCE WITH S.S.P.C. SPECIFICATION SP-2, "HAND TOOL CLEANING" EXCEPT AS REQUIRED FOR WELDING.

HOLES: ARE TO BE 15/16 INCHES IN DIAMETER UNLESS NOTED OTHERWISE AND ARE TO BE DRILLED FULL SIZE OR SUB-DRILLED 11/16 INCHES IN DIAMETER AND REAMED FULL SIZE.

BOLTED CONNECTIONS: ARE TO BE MADE USING 7/8 INCH DIAMETER HIGH STRENGTH STEEL BOLTS. BOLTS SHALL MEET THE REQUIREMENTS OF ASTM A325 TYPE 3 (WITH ATMOSPHERIC CORROSION RESISTING PROPERTIES). WASHERS ARE TO BE FLAT OR BEVELED AS REQUIRED. SUBSTANTIATING CERTIFICATION IS TO BE PROVIDED FOR THE BOLTS AND NUTS.

WELDING: SPLICES ARE NOT PERMITTED. WELD METAL SHALL HAVE CORROSION RESISTING PROPERTIES COMPARABLE TO THAT OF THE PARENT METAL. FLUX CORE WELDING WILL BE PERMITTED PROVIDED H8 OR LOWER DESIGNATION ELECTRODES ARE USED FOR THE FCAW WELDS.

QUALITY CONTROL: QUALITY CONTROL SHALL BE PROVIDED BY THE FABRICATOR IN ACCORDANCE AWS D1.5, LATEST EDITION.

THE FOLLOWING QUALITY ASSURANCE TESTING WILL BE CARRIED OUT BY THE C.P.R. OR ITS INSPECTION REPRESENTATIVE AT C.P.R. EXPENSE:

- 100% OF THE FLANGE TO WEB JOINTS TO BE ULTRASONICALLY TESTED.

METALLIZING: TO BE IN ACCORDANCE WITH AWS C2.18 WITH A MINIMUM THICKNESS OF ZINC COATING OF 6 MILS.

PAINTING: METALLIZED SURFACES EXCEPT FOR THOSE SURFACES COVERED AND SEALED BY PLATES OR OTHER MEMBERS, ARE TO BE COATED WITH AN APPROVED WATERBORNE ACRYLIC OR OTHER LOW VISCOSITY (MINIMUM 70% SOLIDS BY VOLUME) EPOXY COATING TO A MINIMUM DRY FILM THICKNESS OF 6 MILS. THE TOP COAT SHALL MATCH THE COLOR OF THE OXIDIZED STEEL. APPLICATION TO THE ZINC SURFACE IS TO BE IN ACCORDANCE WITH THE MANUFACTURER'S RECOMMENDATIONS.

GALVANIZING: MATERIAL WHERE NOTED IS TO BE GALVANIZED IN ACCORDANCE WITH ASTM A123 , 2 OZ./SQ. FT.

ASSEMBLY: THE SPANS ARE TO BE SHIPPED FULLY ASSEMBLED.

ERECTION MARKS: ARE TO BE PAINTED IN LOCATIONS NOT READILY VISIBLE AFTER ERECTION.

BEARING PADS: SHALL BE 100% VIRGIN POLYISOPRENE (NATURAL RUBBER) IN ACCORDANCE WITH THE AREMA MANUAL, CHAPTER 15 WITH 60 DUROMETER HARDNESS. BEARING PADS TO BE BONDED TO THE SHOE PLATES USING AN APPROVED ADHESIVE SUCH AS REMA SC-200 CEMENT.

ALL QUANTITIES ARE PER SPAN.
WEIGHT OF STEEL: 40000 LBS PER SPAN.
(2 SPANS REQUIRED)

No.	DATE	REVISION	BY
	Oct. 3, 08	SIGNED AND ISSUED	

CANADIAN PACIFIC
Engineering Services - Structures & Projects
STRUCTURES PLANNING & DESIGN
CALGARY, ALBERTA

BR. 46.78 C&M SUB. CHICAGO SERVICE AREA

44'-0" STEEL BDPG SPAN STEEL WORK

DWG. BY: SG CHK BY: JAW OFFICE FILE: XB-C&M-46.78
SCALE: AS SHOWN
DATE: OCT 03, 2008
ENGINEER
MANAGER, STRUCTURES PLANNING & DESIGN
PLAN No. B-1-5349-2

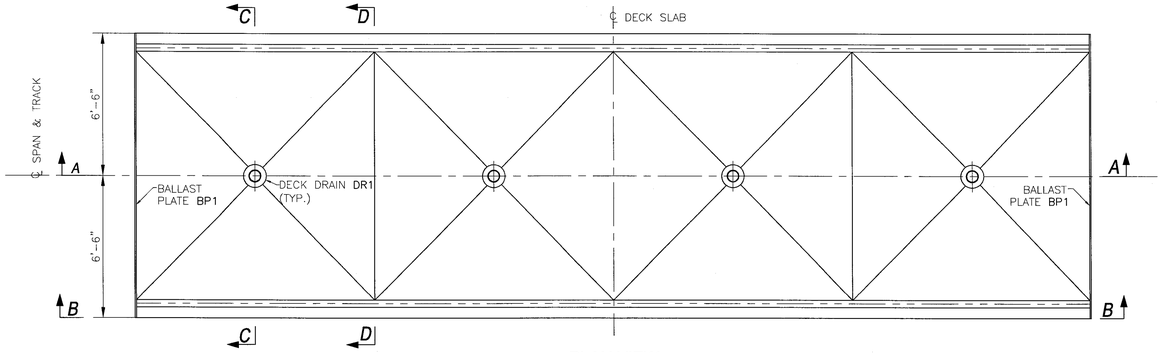

PLAN VIEW

SCALE: 3/8"=1'-0"

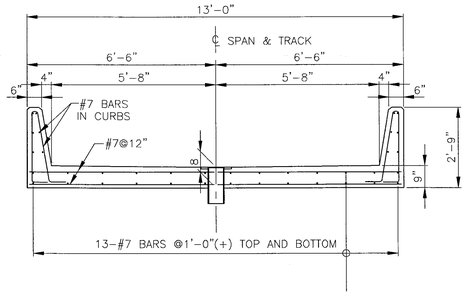

SECTION C-C

STEELWORK NOT SHOWN FOR CLARITY

SCALE: 1/2"=1'-0"

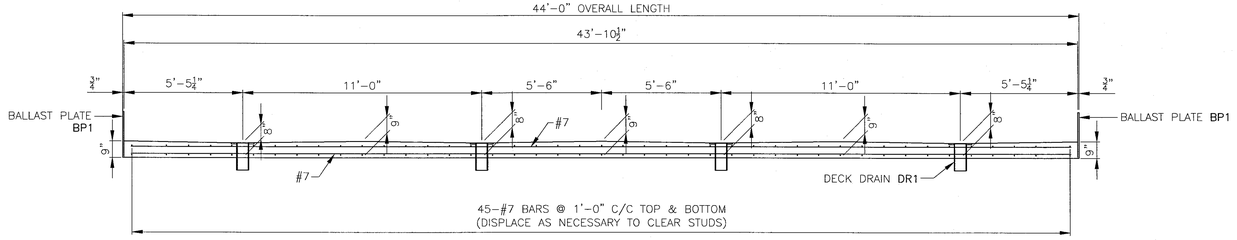

SECTION A-A

SCALE: 3/8"=1'-0"

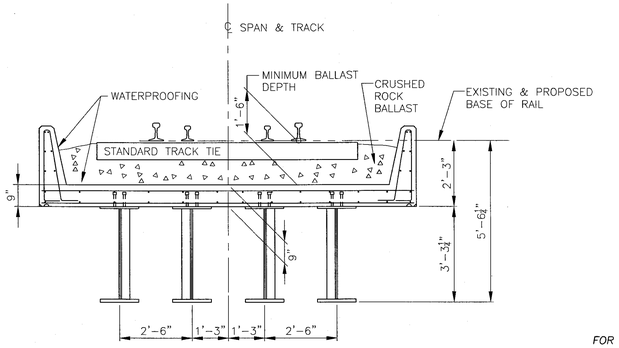

SECTION D-D

SEE SECTION C-C FOR REINFORCEMENT

SCALE: 1/2"=1'-0"

FOR GENERAL NOTES SEE DRAWING B-1-5349-6
FOR BALLAST PLATES & DRAINS SEE DRAWING B-1-5349-2

ESTIMATED QUANTITIES:

CONCRETE: 20. CU. YDS

REINFORCINGS STEEL: 6940 LBS

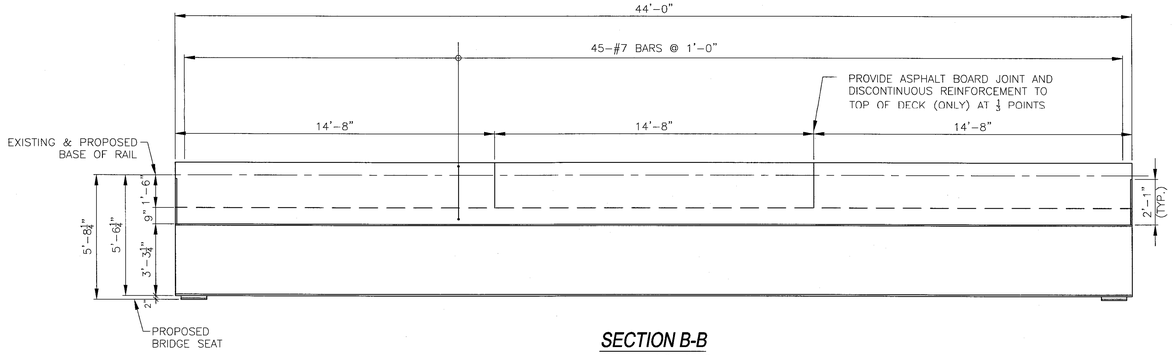

SECTION B-B

SCALE: 3/8"=1'-0"

No.	DATE	REVISION	BY
	Oct.21, 08	SIGNED AND ISSUED	

CANADIAN PACIFIC

Engineering Services - Structures & Projects

STRUCTURES PLANNING & DESIGN

CALGARY, ALBERTA

BR. 46.78 C&M SUB. CHICAGO SERVICE AREA

44'-0" BDPG SPAN DECK SLAB

DWG. BY: SG CHK BY: JAW OFFICE FILE: XB-C&M-46.78

SCALE: AS SHOWN

DATE: OCT 21, 2008

ENGINEER

MANAGER, STRUCTURES PLANNING & DESIGN

PLAN No. B-1-5349-3

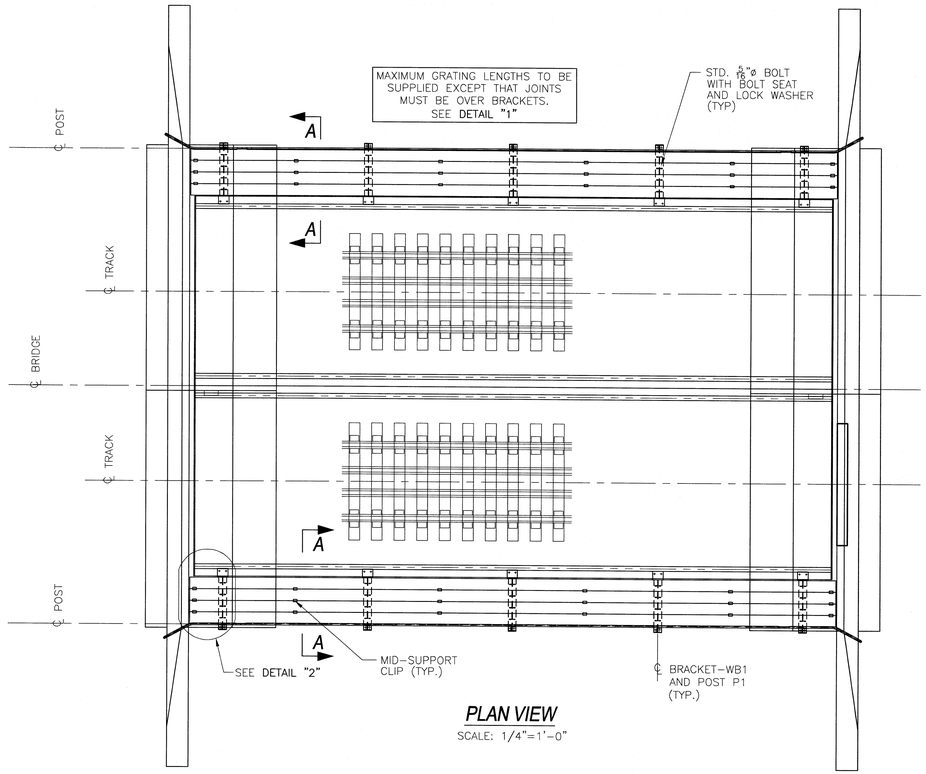

PLAN VIEW

SCALE: 1/4"=1'-0"

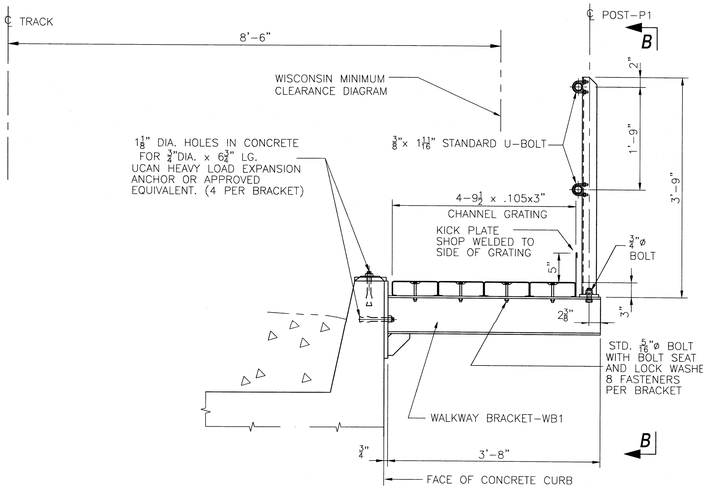

SECTION A-A

SCALE: 1"=1'-0"

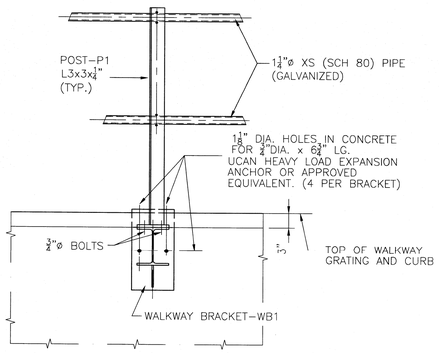

VIEW B-B

SCALE: 1"=1'-0"

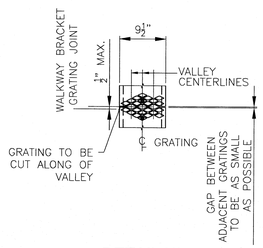

DETAIL '1'

TYPICAL JOINT DETAIL FOR 9 1/2" WIDE CHANNEL GRATING

SCALE: 1"=1'-0"

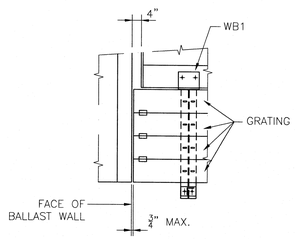

DETAIL '2'

TYPICAL GRATING INSTALLATION AT ABUTMENT

SCALE: 1/2"=1'-0"

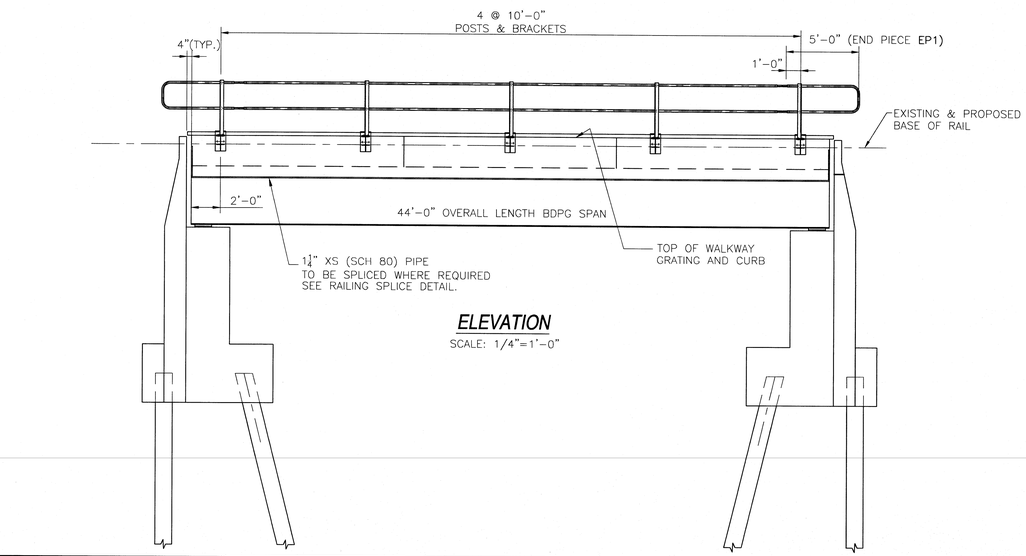

ELEVATION

SCALE: 1/4"=1'-0"

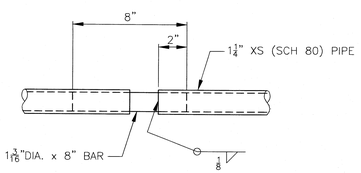

RAILING JOINT

AS REQUIRED

SCALE: 3"=1'-0"

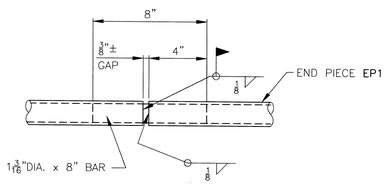

END PIECE JOINT

SCALE: 3"=1'-0"

No.	DATE	REVISION	BY
	Oct. 3, 08	SIGNED AND ISSUED	

CANADIAN PACIFIC
Engineering Services - Structures & Projects
STRUCTURES PLANNING & DESIGN
CALGARY, ALBERTA

BR. 46.78 C&M SUB. CHICAGO SERVICE AREA

WALKWAY DETAILS FOR 44'-0" D.P.G. SPANS SHEET 1 OF 2

DWG. BY: SG	CHK BY: JAW
OFFICE FILE:	XB-C&M-46.78
SCALE:	AS SHOWN
DATE:	OCT 03, 2008
PLAN No.	B-1-5349-4

ENGINEER

MANAGER, STRUCTURES PLANNING & DESIGN

GENERAL NOTES:

DESIGN LOADING:	GRATINGS – 85. LBS. PER SQ. FT.
	HAND RAILINGS AND POSTS – 200 LBS APPLIED IN ANY DIRECTION AT THE TOP OF RAIL.
STRUCTURAL STEEL:	TO BE IN ACCORDANCE WITH ASTM A36 OR APPROVED EQUIVALENT.
WELDING:	TO BE IN ACCORDANCE WITH AWS D1.5, LATEST EDITION.
GALVANIZING:	ALL STEEL IS TO BE GALVANIZED IN ACCORDANCE WITH ASTM A123, 2 OZ./SQ. FT. ENSURE FIT OF HAND RAILING COMPONENTS AFTER GALVANIZING.
CHANNEL GRATING:	TO BE I.S.G. DIAMOND GRIP CHANNEL GALVANIZED STEEL GRATINGS OR APPROVED EQUAL, COMPLETE WITH KICK PLATES, STANDARD BOLT SEATS, MID–SUPPORT CLIPS AND HOLD–DOWN BOLTS WITH LOCK NUT WASHERS AS SUPPLIED BY THE MANUFACTURER. ALL HARDWARE IS TO BE GALVANIZED.
MATCHMARKING:	THE FABRICATOR SHALL PROVIDE COMPLETE MATCH MARKING WITH A SUITABLE ERECTION DRAWING.
HIGH STRENGTH BOLTS:	TO BE SUPPLIED WITH THE WALKWAY.
REFLECTORIZED TAPE:	WHITE REFLECTORIZED TAPE SHALL BE HIGH INTENSITY GRADE.

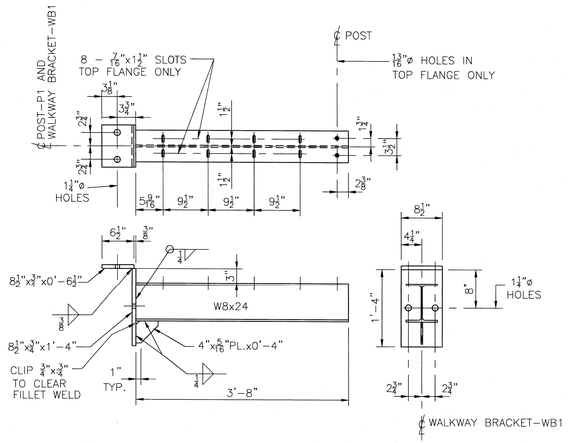

WALKWAY BRACKET - WB1

(GALVANIZED)
10 REQUIRED 130 lbs. EACH
SCALE: 1"=1'–0"

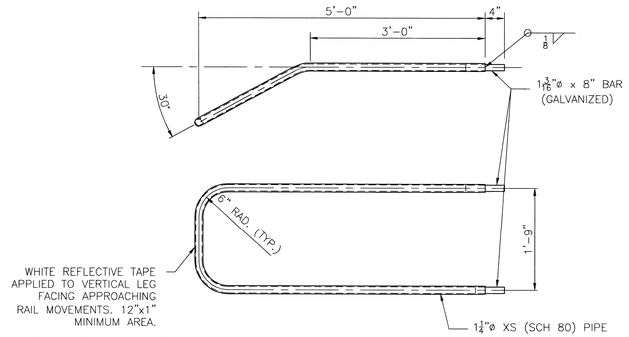

END PIECE - EP1

(GALVANIZED)
4 REQUIRED 42 LBS. EACH
SCALE: 1"=1'–0"

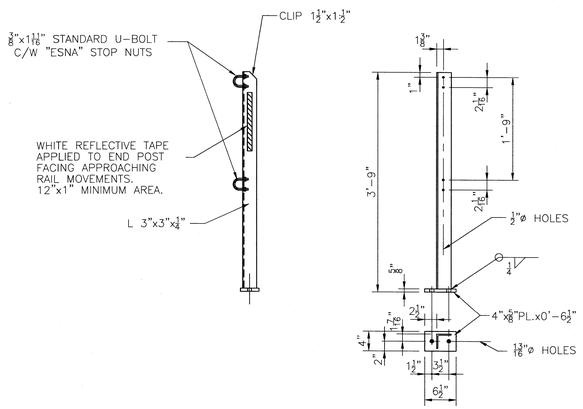

POST - P1

(GALVANIZED)
10 REQUIRED 24 lbs. EACH
SCALE: 1"=1'–0"

No.	DATE	REVISION	BY
	Oct. 3, 08	SIGNED AND ISSUED	

CANADIAN PACIFIC
Engineering Services - Structures & Projects
STRUCTURES PLANNING & DESIGN
CALGARY, ALBERTA

BR. 46.78 C&M SUB. CHICAGO SERVICE AREA

WALKWAY DETAILS FOR 44'-0" D.P.G. SPANS SHEET 2 OF 2

DWG. BY: SG CHK BY: JAW	OFFICE FILE: XB–C&M–46.78
ENGINEER	SCALE: AS SHOWN
	DATE: OCT 03, 2008
MANAGER, STRUCTURES PLANNING & DESIGN	PLAN No. B-1-5349-5

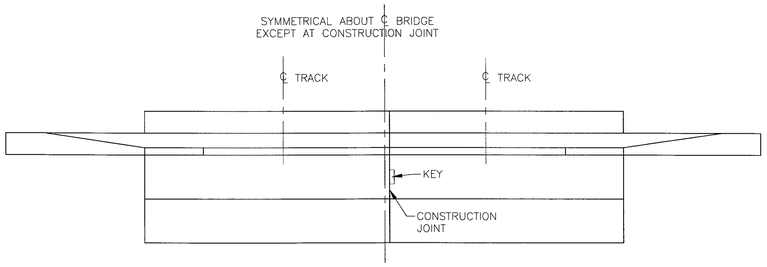

PLAN VIEW AT WEST ABUTMENT

SCALE: 1/4"=1'-0"

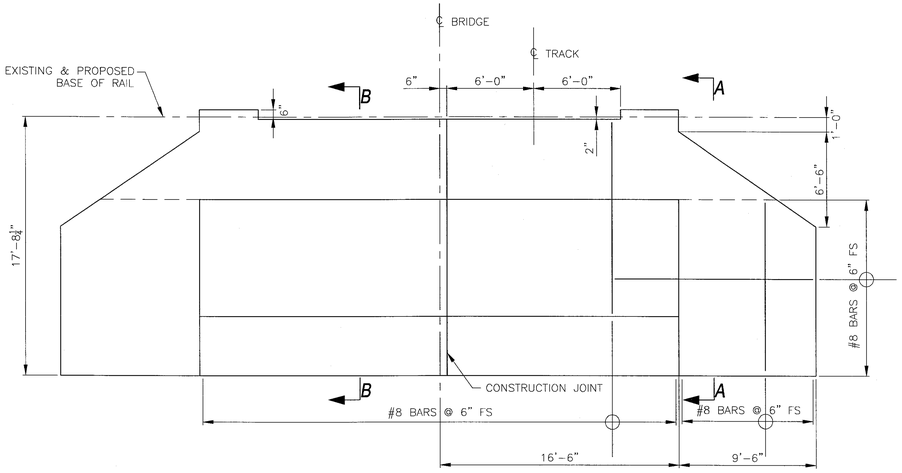

FRONT ELEVATION AT WEST ABUTMENT

SCALE: 1/4"=1'-0"

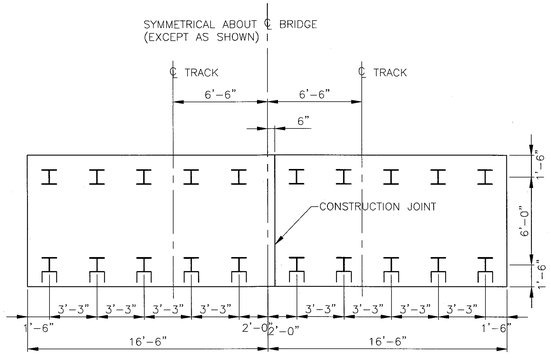

PILE LAYOUT AT WEST ABUTMENT

SCALE: 1/4"=1'-0"

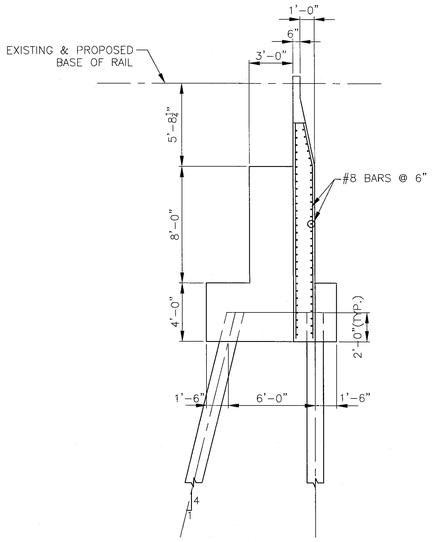

SECTION A-A

SCALE: 1/4"=1'-0"

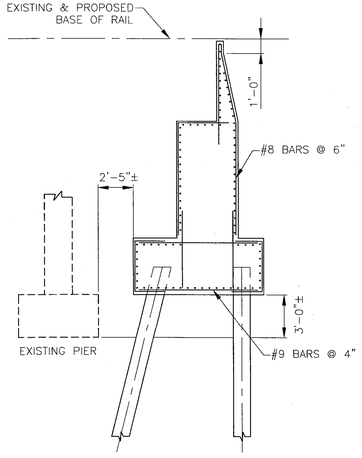

SECTION B-B

SCALE: 1/4"=1'-0"

GENERAL NOTES FOR CONCRETE DECKS AND FOUNDATIONS:

DESIGN LOADING: COOPER'S E-90.

SPECIFICATIONS: AREMA MANUAL CHAPTER 8, LATEST EDITION.

CONCRETE: TO HAVE A MINIMUM COMPRESSIVE STRENGTH OF 5,000 PSI IN 28 DAYS. CONCRETE MATERIALS, MIX DESIGN, TESTING AND CONSTRUCTION TO BE IN ACCORDANCE WITH PART 1 OF THE AREMA MANUAL, CHAPTER 8. CONCRETE SHALL BE MADE USING LOW ALKALI NORMAL (TYPE 1A) PORTLAND CEMENT IN ACCORDANCE WITH ASTM STANDARD C150 WITH LESS THAN 0.6% SODIUM EQUIVALENTS. THE MAXIMUM WATER TO CEMENT RATIO IS TO BE IN ACCORDANCE WITH SECTION 1.12.3 OF CHAPTER 8. AN AIR ENTRAINING AGENT SHALL BE USED AND THE AIR CONTENT IS TO BE 5% TO 8%. THE MAXIMUM SIZE OF AGGREGATE IS TO BE 3/4 INCH. THE CHAMFER ON EXPOSED EDGES IS TO BE ONE INCH. THE SLUMP AT THE POINT OF DISCHARGE SHALL BE A MINIMUM OF 2 INCHES AND A MAXIMUM OF 4 INCHES.

IF THE USE OF LOW ALKALI NORMAL (TYPE 1A) NORMAL PORTLAND CEMENT IS NOT PRACTICAL THEN THE USE OF PROVEN NON-REACTIVE AGGREGATES OR AN APPROPRIATE SUPPLEMENTARY CEMENTING MATERIAL IS ACCEPTABLE TO PRECLUDE DELETERIOUS CONCRETE EXPANSION. NON-REACTIVE AGGREGATES SHALL BE FROM A QUARRY APPROVED BY THE STATE DEPARTMENT OF TRANSPORTATION BASED UPON A PETROGRAPHIC ANALYSIS BY A QUALIFIED LABORATORY. TYPES IIA, IIIA, IV AND V CEMENT MAY BE USED IF APPROVED BY THE ENGINEER.

REINFORCING STEEL: SHALL BE DEFORMED BARS IN ACCORDANCE WITH ASTM A615 GRADE 60. WELDING OF REINFORCEMENT IS PROHIBITED. THE MINIMUM CONCRETE COVER SHALL BE IN ACCORDANCE WITH TABLE 8.2.7 OF CHAPTER 8.

CONSTRUCTION JOINT TREATMENT: A 4-INCH CAST-IN-PLACE WATERSTOP IS TO BE PROVIDED BETWEEN THE TWO POURS AND FOR THE FULL HEIGHT OF THE WEST ABUTMENT. DO NOT USE AN ADHESIVE TYPE OF WATERSTOP.

ROUGHEN SURFACES WHERE CONTACT WITH NEW CONCRETE IS TO BE MADE. APPLY AN EPOXY RESIN BASED BONDING SYSTEM MEETING ASTM SPECIFICATION C881, TYPE 2, GRADE 2, WITH THE CLASS TO BE DETERMINED BY THE APPLICATION TEMPERATURE AS RECOMMENDED BY THE MANUFACTURER.

DECK SLAB SURFACE: THE TOP OF THE DECK SLAB IS TO BE WOOD TROWEL FINISHED.
THE CONCRETE CURBS ARE TO BE SAW-CUT AS SHOWN BEFORE APPLYING WATERPROOFING.
THE TOP OF THE DECK SLAB IS TO BE INSPECTED BEFORE APPLYING WATERPROOFING. ANY VOIDS ON THE DECK OR CURB ARE TO BE FILLED. THE SURFACE ROUGHNESS OF THE CONCRETE IS TO BE IN ACCORDANCE WITH THE AREMA MANUAL, CHAPTER 8, PART 29, CLAUSE 29.14.3.4a (2).

WATERPROOFING: DECK WATERPROOFING SHALL BE APPLIED TO THE TOP OF THE DECK SLAB AND TO THE INSIDE FACE OF EACH CURB. THE WATERPROOFING MEMBRANE SHALL BE APPLIED ON TOP OF A PRIMER COMPATIBLE WITH THE SUBSTRATE AS RECOMMENDED BY THE MANUFACTURER OF THE MEMBRANE. THE MEMBRANE SHALL BE A 100% SOLVENT FREE, REACTIVE, COLD LIQUID SPRAY APPLIED SEAMLESS ELASTOMERIC MEMBRANE SYSTEM IN ACCORDANCE WITH PART 19 OF AREMA CHAPTER 8 AND SHALL BE APPLIED TO PROVIDE A TOTAL ELASTOMERIC MEMBRANE THICKNESS IN ACCORDANCE WITH THE MANUFACTURER'S RECOMMENDATIONS BUT NOT LESS THAN 80 MILS. THE WET FILM THICKNESS OF THE MEMBRANE SHALL BE CONFIRMED BY TESTING AT LEAST ONCE FOR EVERY 100 SQUARE FEET OF WATERPROOFED AREA.

WATERPROOFING MEMBRANE PROTECTION: TWO LAYERS OF 3/8 INCH THICK ASPHALT BOARDS ARE TO BE APPLIED OVER THE MEMBRANE IN ACCORDANCE WITH PART 19 OF AREMA CHAPTER 8. ALL JOINTS BETWEEN ASPHALT BOARDS IN BOTH LAYERS ARE TO BE CAULKED WITH MATERIAL MEETING THE REQUIREMENTS OF PART 19 OF AREMA CHAPTER 8 AND THE RECOMMENDATIONS OF THE ASPHALT BOARD MANUFACTURER.

SPAN ANCHOR BOLTS: ARE TO BE GROUTED IN PLACE USING SIKA GROUT 212HP OR APPROVED EQUAL.

GEOTECHNICAL INVESTIGATION: A REPORT OF THE GEOTECHNICAL ENGINEERING ANALYSIS BY STS/AECOM IS AVAILABLE UPON REQUEST. THE C.P.R. DOES NOT WARRANT THE CONCLUSIONS IN THE REPORT AND THE CONTRACTOR SHALL MAKE HIS OWN ASSESSMENT OF GEOTECHNICAL CONDITIONS.

PILE DRIVING AND SUPERVISION: PILES SHALL BE HP12X53 STEEL SECTIONS WITH A MINIMUM YIELD STRENGTH OF 50 KSI.

PILES SHALL BE DRIVEN TO A MINIMUM SAFE WORKING CAPACITY OF 75 TONS IN COMPRESSION AND 45 TONS IN TENSION AS DETERMINED BY A QUALIFIED GEOTECHNICAL ENGINEER WHO WILL BE ENGAGED BY THE C.P.R. THE GEOTECHNICAL ENGINEER WILL MAKE HIS DETERMINATION ON THE BASIS OF TESTS TO BE PERFORMED BY THE CONTRACTOR AS FOLLOWS. ANTICIPATED PILE EMBEDMENT TO ACHIEVE THESE RESULTS IS ESTIMATED TO BE 70 FEET.

THE ALLOWABLE LOAD SHALL BE DETERMINED EITHER BY THE PERFORMANCE OF A LOAD TEST IN ACCORDANCE WITH ASTM D1143 OR ASTM D4945, OR BY DYNAMIC MONITORING CONDUCTED DURING DRIVING USING A PILE DRIVING ANALYZER (PDA). PDA RESULTS SHALL BE ASSESSED BY THE CONTRACTOR USING A GRLWEAP ANALYSIS AND SHALL BE SUBJECT TO THE APPROVAL OF THE GEOTECHNICAL ENGINEER.

THE GEOTECHNICAL ENGINEER OR HIS REPRESENTATIVE SHALL ALSO DOCUMENT PILE INFORMATION SUCH AS LENGTHS, ELEVATIONS AND DRIVING RESISTANCES.

PILE SPLICES: SHOULD BE AVOIDED IF POSSIBLE. IF SPLICES ARE REQUIRED THEN THEY SHALL BE PLANNED TO OCCUR AT A MINIMUM DEPTH OF FIFTEEN FEET BELOW THE CUT-OFF ELEVATION. SPLICES SHALL BE FULL STRENGTH WELDED SPLICES OR FULL STRENGTH COMMERCIAL SPLICES WITH DETAILS TO BE SUBMITTED BY THE CONTRACTOR FOR REVIEW BY THE ENGINEER.

BACKFILL: SHALL BE COMPACTED FREE DRAINING GRANULAR MATERIAL SUCH AS PIT RUN GRAVEL OR CRUSHED STONE TO THE APPROVAL OF THE ENGINEER.

SUBMITTALS: ALL CONTRACTOR'S SUBMITTALS REQUIRED BY THE CONTRACT DOCUMENTS, INCLUDING IN THESE GENERAL NOTES, SHALL BE MADE TO THE ENGINEER. SUBMITTALS SHALL BE SUBJECT TO APPROVAL OR ACCEPTANCE BY THE ENGINEER OR THE GEOTECHNICAL ENGINEER AS INDICATED.

THE FOLLOWING APPROVED SUBMITTALS SHALL BE FORWARDED TO THE MANAGER STRUCTURES PLANNING & DESIGN FOR RECORD PURPOSES:

- THE CONCRETE SUPPLIER'S MIX DESIGN.
- CEMENT MILL CERTIFICATES INDICATING THE TYPE OF CEMENT USED AND SODIUM EQUIVALENTS.
- EVIDENCE THAT AGGREGATES ARE NON-REACTIVE IF THE CEMENT SODIUM EQUIVALENTS ARE NOT LESS THAN 0.6%, OR
- DETAILS OF SUPPLEMENTARY CEMENTING MATERIALS USED (TO BE INDICATED IN THE MIX DESIGN).
- CONCRETE STRENGTH TEST RESULTS IN ACCORDANCE WITH AREMA CHAPTER 8 SECTION 1.12.5, METHOD 2 OR 3.
- AN AS-CONSTRUCTED PILE PLAN FOR EACH ABUTMENT, INCLUDING PILE POSITIONS IN PLAN VIEW; AS-CONSTRUCTED PILE BATTERS; AND PILE LENGTHS.
- THE GRADE OF STEEL USED IN THE PILES.
- THE LOAD TEST OR GRLWEAP ANALYSIS RESULTS, WITH THE CALCULATED PILE CAPACITY INDICATED.
- LOCATIONS AND DESIGN DETAILS OF PILE SPLICES.
- SIEVE ANALYSIS OF MATERIAL USED AS BACKFILL BEHIND ABUTMENTS.

- MILL CERTIFICATES FOR REINFORCING STEEL.

ESTIMATED QUANTITIES: CONCRETE 120 C.Y.

REINFORCEMENT TO BE DETERMINED BY CONTRACTOR.

REINFORCEMENT TO BE #5 BARS AT 6" SPACING BOTH WAYS BOTH FACES. EXCEPT AS SHOWN.

No.	DATE	REVISION	BY
	Oct. 21, 08	SIGNED AND ISSUED	

CANADIAN PACIFIC
Engineering Services - Structures & Projects
STRUCTURES PLANNING & DESIGN
CALGARY, ALBERTA

BR. 46.78 C&M SUB. CHICAGO SERVICE AREA

BRIDGE RECONSTRUCTION WEST ABUTMENT

DWG. BY: SG CHK BY: JAW OFFICE FILE: XB-C&M-46.78
SCALE: AS SHOWN
DATE: OCT 21, 2008
ENGINEER
MANAGER, STRUCTURES PLANNING & DESIGN
PLAN No. B-1-5349-6

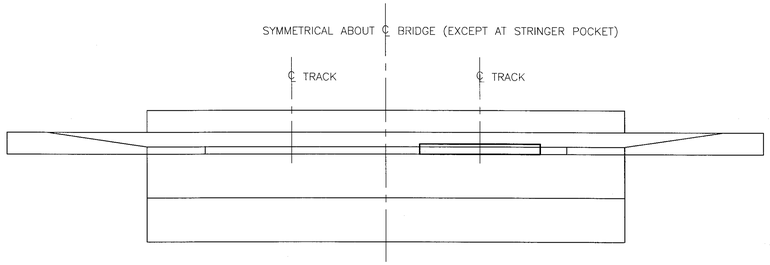

PLAN VIEW AT EAST ABUTMENT

SCALE: 1/4"=1'-0"

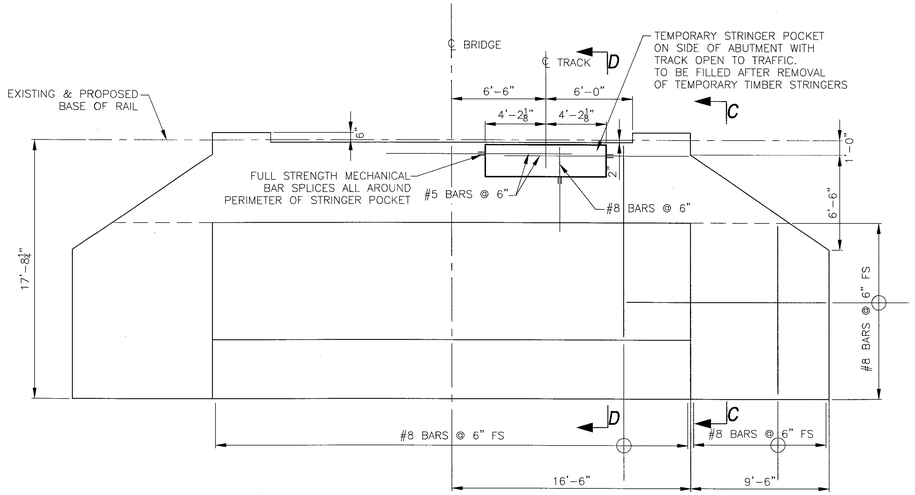

FRONT ELEVATION AT EAST ABUTMENT

SCALE: 1/4"=1'-0"

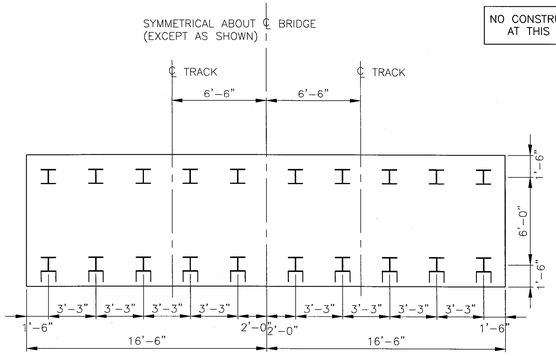

PILE LAYOUT AT EAST ABUTMENT

SCALE: 1/4"=1'-0"

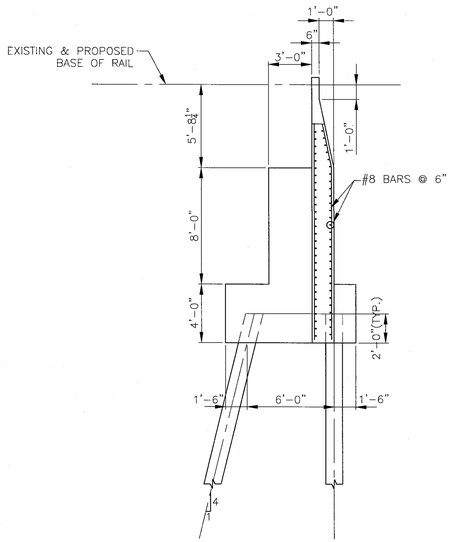

SECTION C-C

SCALE: 1/4"=1'-0"

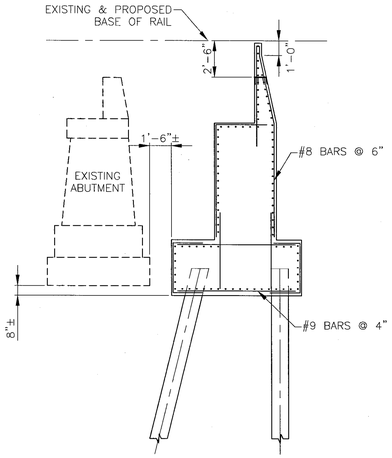

SECTION D-D

SCALE: 1/4"=1'-0"

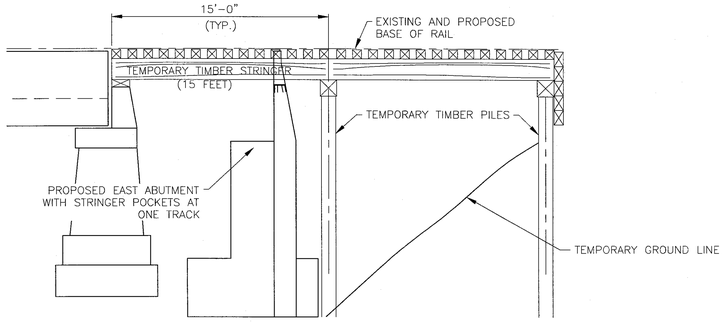

ELEVATION AT NEW EAST ABUTMENT

SCALE: 1/4"=1'-0"

CONSTRUCTION PROCEDURE:

1. CLOSE ONE TRACK TO TRAFFIC.
2. DRIVE TIMBER PILES. EXCAVATE, AND INSTALL TEMPORARY TIMBER SPAN AT EAST END OF OTHER TRACK AS SHOWN.
3. INSTALL TIMBER CURB TO RETAIN BALLAST AND REMOVE EXISTING CONCRETE SPANS FROM ONE TRACK.
4. DRIVE PILES AND CONSTRUCT ONE HALF OF NEW WEST ABUTMENT AND ALL OF NEW EAST ABUTMENT AS SHOWN. LEAVE STRINGER POCKET IN BALLAST WALL OF EAST ABUTMENT.
5. INSTALL NEW SPANS UNDER ONE TRACK ALIGNMENT.
6. PROVIDE TEMPORARY SHORING AT NEW WEST ABUTMENT AND COMPLETE THE FILLS AT BOTH ABUTMENTS. THE FILL AT THE EAST AND WILL THEN BE COMPLETE. THE FILL AT THE WEST END WILL BE UNDER ONE TRACK ONLY.
7. SHIFT TRAFFIC TO THE RECONSTRUCTED SPANS AND CLOSE THE OTHER TRACK TO TRAFFIC.
8. FILL THE STRINGER POCKET AT THE NEW EAST ABUTMENT AND COMPLETE RECONSTRUCTION OF THE NEW WEST ABUTMENT.

FOR TEMPORARY TIMBER DETAILS SEE PLANS B-14-59 & B-14-60.

FOR GENERAL NOTES, CONCRETE AND FOUNDATIONS SEE PLAN B-1-5349-6.

ESTIMATED QUANTITIES: CONCRETE 120 C.Y.

REINFORCEMENT TO BE DETERMINED BY CONTRACTOR.

REINFORCEMENT TO BE #5 BARS AT 6" SPACING BOTH WAYS BOTH FACES. EXCEPT AS SHOWN.

No.	DATE	REVISION	BY
	Oct. 21, 08	SIGNED AND ISSUED	

CANADIAN PACIFIC
Engineering Services - Structures & Projects
STRUCTURES PLANNING & DESIGN
CALGARY, ALBERTA

BR. 46.78 C&M SUB. CHICAGO SERVICE AREA

BRIDGE RECONSTRUCTION EAST ABUTMENT AND CONSTRUCTION DETAILS

DWG. BY: SG CHK BY: JAW OFFICE FILE: XB-C&M-46.78
SCALE: AS SHOWN
DATE: OCT 21, 2008
ENGINEER
MANAGER, STRUCTURES PLANNING & DESIGN
PLAN No. B-1-5349-7

Exhibit C.2.1

Categorical Exclusion

Federal Railroad Administration (FRA)
CATEGORICAL EXCLUSION WORKSHEET

Note: The purpose of this worksheet is to assist proposal sponsors in gathering and organizing materials for environmental analysis required under the National Environmental Policy Act (NEPA), particularly for proposals, which may qualify as Categorical Exclusions and to assist the FRA in evaluating requests from project sponsors for categorical exclusion determinations. Categorical Exclusions are categories of actions (i.e. types of projects) that the FRA has determined, based on its experience, typically do not individually or cumulatively have a significant effect on the human environment and which generally do not require the preparation of either an environmental impact statement or an environmental assessment.

Submission of the worksheet by itself does not meet NEPA requirements. FRA must concur in writing with the proposal sponsor's Categorical Exclusion recommendation for NEPA requirements to be met. Please complete this worksheet using compatible word processing software and submit and transmit the completed form in electronic format.

For Agency Use	*Date Received:*
Reviewed By: *Date:*	*Recommendation for action:* ☐ *Accept* ☐ *Return for Revisions* ☐ *Not Eligible*
Comments:	
Concurrence by Counsel: ☐ *Accept Recommendation* ☐ *Return with Comments*	*Reviewed By:* *Date:*
Comments:	
Concurrence by Approving Official:	*Date:*

I. PROPOSAL DESCRIPTION

Proposal Sponsor	**Date Submitted**	**FRA Identification Number (if any)**
Mr. George Weber, Bureau Chief Bureau of Railroads Illinois Department	May 17, 2010	
Proposal Title Canadian Pacific Wadsworth, IL HSR Bridge Replacement		
Location (Include Street Address, City or Township, County, and State) 100 W. Randolph St. JRTC Suite 6-600 Chicago, IL 60601-3229		
Contact Person Mr. George Weber	**Phone** 312-793-4222	**E-mail Address** george.weber@illinois.gov

Note: Fully describe the proposal including specifics that may be of environmental concern such as: widening an embankment to stabilize roadbed; repairing or replacing bridge piers foundations, including adding rip-rap in a waterway; earthwork and altering natural (existing) drainage patterns and creating new water discharge; contaminated water needing treatment; building a new or adding on to a shop building; fueling or collection of fuel or oil and contaminated water; building or extending a siding; and building or adding on to a yard.

Description of Proposal

This project will replace two existing steel and concrete composite railway bridges that are located north of Wadsworth, Illinois, in Lake County, IL on the Canadian Pacific (CP) Railway Chicago & Milwaukee (C&M) Subdivision. The first bridge is approximately 46' long and is located at CP milepost 46.78 ('Bridge 46'), and the second bridge is approximately 120' long and is located one half mile north at milepost 47.27 ('Bridge 47'). These bridges span drainage tributaries to the nearby Des Plaines River to the west of the CP right-of-way.

This project is seeking $3,711,576 in federal assistance from FRA to complete the $7,423,152 total cost of the project. The remaining $3,711,576 will be provided by Canadian Pacific Railway. The bridge replacements are needed so that Amtrak can continue to provide safe, reliable, and efficient service on its Hiawatha and Empire Builder passenger service lines, which operate on the CP C&M subdivision between Chicago, IL and Milwaukee, WI. Both bridges have reached the end of their servicable lives, and are being monitored for impending speed restrictions that will reduce the passenger rail speed limit from the current 79mph to 30mph.

No new right-of-way is required for this project. The proposed installation method will be conducted within the existing railway right of way. Construction activities are sequenced to construct new abutments for the bridges, remove the existing spans, and then lower the new spans in place. The new bridge abutments are designed such that the hydraulic capacity beneath the bridge spans is increased or maintained. Staging of materials and assembly of structures will be done on CP property and will not require use of any public land or public property.

Purpose and Need of Proposal

The purpose of this project is to replace two existing railroad bridges that have reached the end of their servicable lives. These bridges need replacement in order to prevent an impeding decrease in the passenger rail speed limit from 79mph to 30mph, which will increase the travel time between Chicago and Milwaukee on Amtrak's Hiawatha and Empire Builder service lines.

II. NEPA CLASS OF ACTION

Answer the following questions to determine the proposal's potential class of action.

A. Will the proposal substantially impact the natural, social and / or human environment?

☐ YES (Contact FRA) ☒ NO (Continue)

Actions that will significantly impact the environment require preparation of an Environmental Impact Statement. These proposals typically include construction or extension of rail lines or rail facilities including passenger, high speed, or freight rail activities.

B. Is the significance of the proposal's social, economic or environmental impacts unknown?

☐ YES (Contact FRA) ☒ NO (Continue)

C. Does Section 4(f) of the Department of Transportation Act apply? (i.e. proposal requires the use of publicly owned land of a public park, recreation area, or wildlife and waterfowl refuge of national, State, or local significance, or land of an historic site of national, State, or local significance, as determined by the Federal, State, or local officials having jurisdiction over the park, area, refuge, or site.)

☐ YES (Contact FRA) ☒ NO (Continue)

D. Is the proposal likely to require detailed evaluation of more than a few potential impacts?

☐ YES (Contact FRA) ☒ NO (Continue)

E. Is the proposal likely to generate intense public discussion or concern, even though it may be limited to a relatively small subset of the community?

☐ YES (Contact FRA) ☒ NO (Continue)

F. Is the proposal inconsistent with any Federal, State, or local law, regulation, ordinance, or Judicial or administrative determination relating to environmental protection?

☐ YES (Contact FRA) ☒ NO (Continue)

G. Is the proposal an integral part of a program of current Federally supported actions which, when considered separately, would not be classified as major actions, but when considered together may result in substantial impacts?

☐ YES (Contact FRA) ☒ NO (Continue)

If the answer to any of the questions B through G is "YES", contact the FRA to determine whether the proposal requires preparation of an Environmental Assessment.

H. Is the proposal consistent with one of the following potential Categorical Exclusions?

FRA Procedures for Considering Environmental Impacts, 64 FR 28545 (May 26, 1999)

☒ YES (Mark category and continue as indicated) ☐ NO (Contact FRA)

☐ Financial assistance or procurements solely for planning or design activities that do not commit the FRA or its applicants to a particular course of action affecting the environment. *(stop and submit to FRA)*

☐ State rail assistance grants for acquisition. *(Continue to Part III)*

☐ Operating assistance to a railroad to continue existing service or to increase service to meet demand, where the assistance will not result in a change in the effect on the environment. *(stop and submit to FRA)*

☐ Acquisition of existing railroad equipment, track and bridge structures, electrification, communication, signaling or security facilities, stations, maintenance of way and maintenance of equipment bases, and other existing railroad facilities or the right to use such facilities, for the purpose of conducting operations of a nature and at a level of use similar to those presently or previously existing on the subject properties. *(Complete Part III, Sections H, I, U, & V and submit to FRA)*

☐ Research, development and/or demonstration of advances in signal, communication and/or train control systems on existing rail lines provided that such research, development and/or demonstrations do not require the acquisition of substantial amounts of right-of-way, and do not substantially alter the traffic density [or operational] characteristics of the existing rail line. *(Continue to Part III)*

☐ Temporary replacement of an essential rail facility if repairs are commenced immediately after the occurrence of a natural disaster or catastrophic failure. *(Continue to Part III)*

☐ Changes in plans for a proposal for which an environmental document has been prepared, where the changes would not alter the environmental impacts of the action. *(Continue to Part III describing the full consequences of the changes only)*

☐ Maintenance of: existing railroad equipment; track and bridge structures; electrification, communication, signaling, or security facilities; stations; maintenance-of-way and maintenance-of-equipment bases; and other existing railroad-related facilities. ("Maintenance" means work, normally provided on a periodic basis, which does not change the existing character of the facility, and may include work characterized by other terms under specific FRA programs) *(Continue to Part III)*

☐ Financial assistance for the construction of minor loading and unloading facilities, provided that proposals are consistent with local zoning, do not involve the acquisition of a significant amount of land, and do not significantly alter the traffic density characteristics of existing rail or highway facilities. *(Continue to Part III)*

☐ Minor rail line additions including construction of side tracks, passing tracks, crossovers, short connections between existing rail lines, and new tracks within existing rail yards, provided that such additions are consistent with existing zoning, do not involve acquisition of a significant amount of right of way, and do not substantially alter the traffic density characteristics of the existing rail lines or rail facilities. *(Continue to Part*

III)

☐ Improvements to existing facilities to service, inspect, or maintain rail passenger equipment, including expansion of existing buildings, the construction of new buildings and outdoor facilities, and the reconfiguration of yard tracks. *(Continue to Part III)*

☐ Environmental remediation through improvements to existing and former railroad track, infrastructure, stations and facilities, for the purpose of preventing or correcting environmental pollution of soil, air or water. *(Continue to Part III)*

☒ Replacement, reconstruction, or rehabilitation of an existing railroad bridge, including replacement with a culvert, that does not require the acquisition of a significant amount of right-of-way. *(Continue to Part III)*

III. PROPOSAL INFORMATION FOR CATEGORICAL EXCLUSIONS

Complete Part III unless indicated otherwise in Part II and submit to FRA.

For work to fixed facilities, maps displaying the following, as applicable, are required to be attached for FRA review:

- Proposal vicinity
- Proposal Site Plan indicating the USGS Quadrangle and Section
- Other Information as necessary to complete Part III

A. Describe how the proposal satisfies the purpose and need identified in Part I:

The replacement of these bridges will eliminate the need to impose speed restrictions on passenger trains traveling in the corridor. The new bridges will allow Amtrak to maintain the existing service schedule and travel times on its Hiawatha and Empire Builder service lines.

B. Location & Land Use: *For fixed facilities, attach a map or diagram, at an appropriate scale, identifying the location of the proposal site and if applicable, the surrounding land uses and zoning of the site and surrounding properties. If the proposal would require many pages of maps or diagrams, include only a location map and contact FRA to determine if additional information is required. A map or diagram that identifies locations of critical resource areas, wetlands, potential historic sites, or sensitive noise receptors such as schools, hospitals, and residences should be included if there is the potential for impacts to these resources.*

Briefly describe the existing land use of the proposal site and surrounding properties and resources.

Bridges 46 and 47 are located in Wadsworth, IL, less than a quarter mile from the Illinois-Wisconsin border. The two bridges are separated approximately by one-half mile, with Bridge 46 approximately 1800' south of Russell Road, and Bridge 47 approximately 1000' north of Russell Road. A project location map is shown in Figure B.1 in the Appendix.

The land use in the vicinity of the bridges is a mix of low density residential, commercial and recreational. A map depicting the land usage in the project vicinity is shown in Figure B.2 in the Appendix. All land parcel information was obtained through the Lake County Assesor’s Graphical Information System (GIS) database, and through coordination with the Lake County Assesor’s Office.

Bridge 46 spans the Newport Drainage Ditch, which flows into the Des Plaines River just west of the Canadian Pacific right-of-way. The DesPlaines River is located approximately 850’ west of Bridge 46, in the adjacent Van Patten Woods owned by the Lake County Forest Preserve. To the east of Bridge 46 is a tract of farmland occupied by the Gendreau Nursery Inc.

Bridge 47 spans an unnamed tributary to the Des Plaines River. At Bridge 47, the DesPlaines River is located 100’ west of the bridge in the Van Patten Woods Forest Preserve. East/northeast of the CP right-of-way at Bridge 47 is a truck repair facility, on land owned by S & D Truck Repair Inc. To the southeast is an undeveloped residential area. Approximately 100 feet to the west of Bridge 47 is the Des Plaines River.

Figures B.3 and B.4 in the Appendix depict the approximate construction and right-of-way limits. All work will be completed within the existing Canadian Pacific right-of-way. The new bridge abutments will be installed at distances equal or greater to the existing abutment separation, thus maintaining the hydraulic flow beneath the bridges. No major impacts on surrounding resources are expected. Impacts to other resources are discussed in the sections below.

C. Historic Resources: *If any cultural, historic, or archaeological resources are located in the immediate vicinity of the proposal, check and describe the resource(s) and then describe any potential effect of the proposal on the resource(s). Consultation with the SHPO is necessary when these resources are potentially affected.*

☐ Cultural: None

☐ Historical: None

☐ Archaeological: None

Has consultation with the State Historic Preservation Officer occurred? If so, describe and attach relevant correspondence.

☒ Consultation with SHPO: Yes. An Environmental Survey Request was sent to the Illinois Department of Transportation's Bureau of Design and Environment (BDE), as part of standard project environmental procedures. The BDE processes Environmental Survey Requests with the Illinois State Historic Preservation Office (SHPO).

IDOT's Cultural Resources Unit and the Illinois Deputy State Historic Preservation Officer determined that no historic properties, subject to Section 106 of the National Historic Preservation Act, will be affected the bridge replacements. A copy of this determination is included as Exhibit C.1.

Additionally, the 1992 National Historic Preservation Act amendments and subsequent revisions to the regulations by the Advisory Council on Historic Preservation (ACHP) incorporate provisions which stipulate that federal agencies, including the Federal Railroad Administration (FRA), must consult with Federally-recognized American Indian tribes that attach religious and cultural significance to historic properties that may be affected by an undertaking. A Project Notification System (PNS) has been developed and employed by the Illinois Department of Transportation, the Illinois State Historic Preservation Officer (SHPO), and the U. S. Department of Transportation (with FHWA the lead agency) to coordinate transportation projects with tribes that have expressed an interest in Illinois. Though there are no tribal lands or

resident tribes near the project location, through the electronic PNS, the following tribes have been notified concerning the project: Miami, Ho Chunk, Potawatomi, Kickapoo, and the Sauk & Fox.

D. Public Notification: *Briefly describe any public outreach efforts undertaken on behalf of the proposal, if any. Indicate opportunities the public has had to comment on the proposal (e.g., Board meetings, open houses, special hearings).*

A notification letter describing the purpose and need for the bridge replacement was sent to any parties potentially impacted by the bridge replacement. This included federal, state, and local contacts and stakeholders, including landowners and agencies with parcels adjacent to the project area. The letters requested input regarding the impacts that the project or project construction will have on a stakeholder's facilities or programs. Copies of the coordination letters are attached in Exhibits D.1-D.17. Copies of the stakeholder responses are also included in Exhibits D.18-D.21.

Indicate prominent concerns expressed by agencies or the public regarding the proposal, if any.

E. Transportation: *Would the proposal have a detrimental effect on other railway operations or impact road traffic, or increase demand for parking?*

☒ No (continue) ☐ Yes, describe potential transportation, traffic, and parking impacts, and address capacity constraints and potential impacts to existing railroad and highway operations. Include maps or diagrams indicating any impacts and any proposed modifications to existing railways or roadways or parking facilities. Also, summarize any consultation that has occurred with other railroads or highway authorities whose operations this project will impact.

Bridges 46 and 47 are not adjacent to any roadways or parking facilities, and will not have any impact on road traffic or parking demand. Railway operations will be minimally impacted since the replacement of Bridges 46 and 47 will strategically follow the commissioning of the Truesdell, Wisconsin crossover HSR initiative, which was awarded to the state of Wisconsin as an ARRA Track 1A project. The Truesdell crossover will shorten the distance between existing crossovers, which is currently 19 miles. The new Trusedell crossover will allow for the double track mainline to have one track closed for construction while the other mainline track remains active. Sequencing the bridge replacement in this way will minimize disruption to passenger and freight traffic on the corridor.

F. Noise and Vibration: *Are permanent noise or vibration impacts likely?*

☒ No (continue) ☐ Yes, describe how the proposal will involve noise impacts. If the proposal will result in a change in noise sources (number or speed of trains, stationary sources, etc.) and sensitive receptors (residences, hospitals, schools, parks, etc.) are present, apply screening distances for noise and vibration assessment found in FRA noise impact assessment guidance manual (and FTA's manual as needed) and compare proposal location with nearest receptor(s). If the screening distance is not achieved, attach a "General Noise and/or Vibration Assessment."

Noise ☐ Vibration ☐

It is concluded that neither a general assessment nor a detailed analysis of noise or vibration impacts is required. Since the proposed project results in no changes to the volume or speed of any freight or passenger trains on the C&M subdivision, there will be no increases in noise or vibration levels.

As a result of the general assessment(s) are there noise or vibration impacts?

☒ No (continue) ☐ Yes (Describe and provide map identifying sensitive receptors):

G. Air Quality: *Does the proposal have the potential to increase concentrations of ambient criteria pollutants to levels that exceed the NAAQS, lead to the establishment of a new non-attainment area, or delay achievement of attainment?*

☒ No (continue) ☐ Yes, attach an emissions analysis for General Conformity regarding Carbon Monoxide (CO), Ozone (O_3), Particulate Matter (PM_{10}), Nitrous Oxides (NO_x), and Carbon Dioxide (CO_2), and include a hot spot analysis if indicated. Describe any substantial impacts from the proposal.

The EPA has determined that Lake County, IL is a non-attainment area for 2 NAAQS pollutants: 1) a moderate non-attainment area for 8-Hr Ozone standard, and 2) a non-attainment area for the PM2.5 standard.

However, since this project is not associated with any new service or increases in rail traffic, no increases in concentrations of ambient criteria pollutants will result. Non-attainment status will not be impacted.

Is the proposal located in a Non-Attainment or Maintenance area?

☐ No (continue) ☒ Yes, for which of the following pollutants:

☐ Carbon Monoxide (CO) ☒ Ozone (O_3) ☐Particulate Matter (PM_{10})

H. Hazardous Materials*: Does the proposal involve the use or handling of hazardous materials?*

☒ No (continue) ☐ Yes, describe use and measures that will mitigate any potential for release and contamination.

No hazardous materials are required or will be used while replacing the bridges.

I. Hazardous Waste: *If the proposal site is in a developed area or was previously developed or used for industrial or agricultural production, is it likely that hazardous materials will be encountered by undertaking the proposal?* (Prior to acquiring land or a facility with FRA funds, FRA must be consulted regarding the potential presence of hazardous materials)

☒ No, explain why not and describe the steps taken to determine that hazardous materials are not present on the proposal site and then continue to question I.

The presence of hazardous materials during construction is not expected, since construction will occur within existing right-of-way

within the footprint of the existing bridge and track structures. To verify that no known potentially hazardous materials are located near the proposed bridges, an investigation was conducted using the Illinois Environmental Protection Agency's online database. A search of the database showed no evidence of any known hazardous materials.

Other sources of hazardous material information were also checked. Although there is no single source that identifies sources of environmental contamination, several state and federal regulatory agencies host online databases or GIS applications that provide information on known environmental contamination. The following agency databases were reviewed for potentially hazardous waste sites within 100 ft. of the CP right-of-way near Bridges 46 and 47:

• National Priorities List (NPL) - Including Proposed, Delisted and Recovery Lists

• Federal Comprehensive Environmental Response, Compensation and Liability Information System List (CERCLIS)

• CERCLIS No Further Remedial Action Planned List (NFRAP)

• Federal Resource Conservation and Recovery Act Information List (RCRA)

• RCRA Corrective Action Report (CORRACTS)

• Federal Emergency Response Notification System List (ERNS)

• IEPA Site Remediation Program Database (SRP)

• IEPA Leaking Underground Storage Tank Incident Tracking (LIT) database

• IEPA State Response Action Program Database

These databases did not indicate that any environmental contamination exists in the vicinity of the bridge replacement sites.

☐ Yes, complete a Phase I site assessment and attach.

If a Phase I survey was completed, is a Phase II site assessment recommended?
☐ No (continue) ☐ Yes, describe the mitigation and clean-up measures that will be taken to remediate any hazardous materials present and what steps will be taken to ensure that the local community is protected from contamination during construction and operation of the proposal.

J. Property Acquisition: *Is property acquisition needed for the proposal?*
☒ No (continue) ☐ Yes, indicate whether the acquisition will result in relocation of businesses or individuals. **Note:** *To ensure eligibility for Federal participation, grantees may not acquire property with either local matching or Federal funds prior to completing the NEPA process and receiving written FRA concurrence in both the NEPA recommendation and property appraisals.*

The project will be built solely within existing Canadian Pacific right-of-way. No property will be acquired. Refer to Figures B.3 and B.4 for construction and right-of-way limits at the bridge location.

K. Community Disruption and Environmental Justice: *Does the proposal present potentially disruptive impacts to adjacent communities?*
☒ No (continue) ☐ Yes, provide a socio-economic profile of the affected community. Indicate whether the proposal will have a disproportionately high and adverse effect on minority or low-income populations. Describe any potential adverse effects and any community resources likely to be impacted. Describe outreach efforts targeted specifically at minority or low-income populations.

Community Disruption and Environmental Justice is addressed in Executive Order on Environmental Justice 12898 "Federal Actions to Address Environmental Justice in Minority Populations and Low-Income Populations". This order requires all federal agencies to address the impact of their programs with respect to environmental justice. The Executive Order states that, to the extent practical and permitted by law, neither minority nor low-income populations may receive disproportionately high or adverse impacts as a result of a proposed project. It also requires that those representatives of any low-income or minority populations that could be affected by the project in the community be given the opportunity to be included in the impact assessment and public involvement process.

This project is consistent with Executive Order 12898 stated above. Since the bridge replacements will not impact any of the nearby human environment or resources, it will not impact any low-impact or minority populations. In addition, though there will be no permanent adverse impacts from the project, all adjacent property owners - which would include any low-income or minority households or busines owners - who could potentially be impacted during the construction process were involved in public outreach as described in Section D 'Public Notification'.

L. Impacts On Wetlands: *Does the proposal temporarily or permanently impact wetlands or require alterations to streams or waterways?*

☐ No (continue) ☒ Yes, show wetlands and waters on the site map and classification. Describe the proposal's potential impact to on-site and adjacent wetlands and waters and attach any coordination with the State and US Army Corps of Engineers.

Figure L.1 depicts the wetlands in the project area. This map was developed using the United States Fish and Wildlife Services National Wetland Inventory Database, available at the following link:

http://www.fws.gov/wetlands/Data/DataDownload.html

Canadian Pacific Railway has prepared wetland delineation reports for each of the bridge replacement. The report for Bridge 46 states that the project will have incidental impact to waters of the United States due to construction activities. The report also states that the project impacts less than 0.1 acres of waters of the United States, and no mitigation is proposed. This report and the Joint Permit Application for Bridge 46 detail potential wetland, soil, and sediment impacts in the bridge vicinity. The application was provided to the US Army Corps of Engineers, and the Lake County Storm Water Management Commission (LCSWM). The LCSWM has tentatively agreed to issue a permit for construction pending the submittal of a signed set of final design plans. Copies of this correspondence are shown in Exhibits L.2 and L.3. CP Railway has stated that, since construction permits issued by LCSWM are good only for a limited time period, they are waiting to confirm the source of all construction funding before taking the final steps necessary to obtain the permit. A summary of the wetland findings discussed in the Joint Permit Application is shown in Exhibit L.4.

A consultant hired by CP also produced a separate environmental study, shown in Exhibit L.5, as part of a construction permit application for Bridge 47. The study contained a Wetland Delineation Report that also concludes that the bridge replacement at Bridge 47 impacts less than 0.1 acres of waters of the United States. The report recommends that, in accordance with Section 404 of the Clean Water Act, any impacts to

the wetlands by filling or dredgeing would require permits from the US Army Corps of Engineers, the Illinois Department of Natural Resources(IDNR) per the Interagency Wetland Policy Act, and the LCSMC.

The incidental impacts due to construction activities discussed in the reports above would be from temporary fill placement for a crane pad within CP right-of-way during construction. However, all temporary fill will be restored per the regulations of the Lake County Watershed Development Ordinance (LCWDO). The LCWDO is administered by the Lake County, IL Stormwater Management Commission (LCSWM). The LCSWM administers countywide floodplain, stormwater, and wetland regulations contained within the Lake County Watershed Development Ordinance (WDO).

M. Floodplain Impacts: *Is the proposal located within the 100-year floodplain or are regulated floodways affected?*

☐ No (continue) ☒ Yes, describe the potential for impacts due to changes in floodplain capacity or water flow, if any. If impacts are likely, attach scale maps describing potential impacts and describe any coordination with regulatory entities.

Both bridges are located in 100-year floodplains. However, no changes to floodplain capacities will result from the installation of the new bridge structures. The new bridge designs each provide for equal or greater hydraulic capacity under the bridge spans than do the existing bridges. The proposed designs also provide four feet or more of clearance between the 100-year floodwater elevations and the bottoms of the new bridge girders. Preliminary engineering design plans showing bridge elevations are shown in Exhibit M.1.

As discussed in Section L above, the Lake County Stormwater Management Commission has tentatively agreed to issue a watershed development permit to construct Bridge 46 based on its review of CP's permit application. The permit application process has begun for Bridge 47, as also noted above.

N. Water Quality: *Are protected waters of special quality or concern, essential fish habitats, or protected drinking water resources present at or directly adjacent to the proposal site?*

☒ No (continue) ☐ Yes, describe water resource and the potential for impact from the proposal, and any coordination with regulatory entities.

The installation of new decking is the principal activity envisioned at these bridges. These activities are anticipated to have minimal impact on aquatic resources and water quality. The new bridge construction will maintain the current dynamic of the surrounding land, and will not increase runoff, generate wastewater, or alternate surrounding surface or subsurface drainage patterns.

Potential water quality impacts associated with these rehabilitation activities (e.g., increased sedimentation, turbidity, etc.) would be minimized by utilizing best management practices (BMPs) such as silt fencing and promptly stabilizing/seeding exposed soils. As such, impacts would be short-term and would not measurably affect aquatic resources. These practices are described in Exhibit L.4 and L.5, the permit application materials sent to the LCSMC on behalf of CP.

O. Navigable Waterways: *Does the proposal cross or have effect on a navigable waterway?*

☒ No (continue) ☐ Yes, describe potential for impact and any coordination with US Coast Guard.

The new bridges do not cross, nor will have any effect on, any navigable waterways, since the bridges only span tributaries. The nearby Des Plaines River, which is a navigable waterway, is not impacted by the project with respect to navigation.

P. Coastal Zones: *Is the proposal in a designated coastal zone?*

☒ No (continue) ☐ Yes, describe coordination with the State regarding consistency with the coastal zone management plan and attach the State finding if available.

The proposed project area is not within a coastal zone, and will not have an impact on the state's coastal zone management plan. The Illinois Department of Natural Resources (IDNR) is the lead agency that heads the Illinois Coastal Management Program, and has concluded that adverse impacts to natural resources in the vicinity of the proposed action are unlikely. See Exhibit R.1 for statements by the IDNR.

Q. Prime and Unique Farmlands: *Does the proposal involve the use of any prime or unique farmlands?*

☒ No (continue) ☐ Yes, describe potential for impact and any coordination with the Soil Conservation Service of the US Department of Agriculture.

Prime and Unique farmlands are identified by the US Department of Agriculture as specific types of farmland that have especially desirable farming charateristics.

Prime farmland does exist near the project vicinity on the south side of both Bridge 46 and Bridge 47, as identified by the US Department of Agriculture. Graphical data for USDA designated farmland areas was extracted from the National Resources Conservation Service’s (NRCS) Soil Data Mart. An NRCS map showing the prime farmland is shown in Figure Q.1.

As Figure Q.1 shows, the prime farmland in the project vicinity is not within the construction limits of the bridge replacements. Since both bridges span Des Plaines River tributaries, and are within existing rights-of-way, the project will not prohibit the use of any prime farmland, or have any adverse impacts to nearby prime farmland. The NRCS does not have data on unique farmland available on its website. A representatives of the Lake County Field Office of the NRCS stated that no unique farmland exists in the area.

R. Ecologically Sensitive Areas And Endangered Species: *Are any ecologically sensitive natural areas, designated wildlife or waterfowl refuges, or designated critical habitat areas (woodlands, prairies, wetlands, rivers, lakes, streams, and geological formations determined to be essential for the survival of a threatened or endangered species) within or directly adjacent to the proposal site?*

☒ No (continue) ☐ Yes, describe them and the potential for impact. Describe any consultation with the State and the US Fish and Wildlife Service about the impacts to these natural areas and on threatened and endangered fauna and flora that may be affected. If required prepare a biological assessment and attach.

The State of Illinois' Ecological Compliance Assessment Tool (EcoCAT) contained no record of any state-listed threatened or endangered species, Illinois Natural Area Inventory sites, dedicated Illinois Nature Preserves, or registered Land and Water Reserves in the project vicinity. Based on the EcoCAT assessment, the Illinois DNR determined that adverse impacts to natural resources were unlikely. A copy of the determination by the DNR is provided in Exhibit R.1. The environmental report developed for Bridge 47 (Exhibit L.5), also concludes that

endangered species and critical habitat are not present.

S. Safety And Security: *Are there safety or security concerns about the proposal?*
☒ No (continue) ☐ Yes, describe the safety or security concerns and the measures that would need to be taken to provide for the safe and secure operation of the proposal after its construction.

There are no safety or security concerns associated with the bridges after construction is complete.

T. Construction Impacts: *Are major construction period impacts likely?*
☒ No (continue) ☐ Yes, describe the construction plan and identify impacts due to construction noise, utility disruption, debris and spoil disposal, and address air and water quality impacts, safety and security issues, and disruptions of traffic and access to property and attach scale maps as necessary.

The proposed installation work method will be conducted within the existing railway right-of-way and within the footprint of the existing bridges so to avoid disturbance to water and habitat. Staging of materials and assembly of structures will be done on CP property and will not require the use of adjacent land. As much work as is possible will be performed from the CP track and the embankment to avoid disturbance to the land below.

U. Cumulative Impacts: *Are cumulative impacts likely?*

A "cumulative impact" is the impact on the environment that results from the incremental impact of the action when added to other past, present, and reasonably foreseeable future actions regardless of what agency (Federal or non-Federal) or person undertakes such other actions. Cumulative impacts may include ecological (such as the effects on natural resources and on the components, structures, and functioning of affected ecosystems), aesthetic, historic, cultural, economic, social, or health, whether direct, indirect, or resulting from smaller actions that individually have no significant impact. Determining the cumulative environmental consequences of an action requires delineating the cause-and-effect relationships between the multiple actions and the resources, ecosystems, and human communities of concern.

☒ No (continue) ☐ Yes, describe the reasonably foreseeable:
(a) Direct impacts, which are caused by the action and occur at the same time and place.

(b) Indirect impacts, which are caused by the action and are later in time or farther removed in distance, but are still reasonably foreseeable. Indirect impacts may include growth inducing effects and other effects related to induced changes in the pattern of land use, population density or growth rate, and related effects on air and water and other natural systems, including ecosystems.

V. Related Federal, State, or Local Actions: *Indicate whether the proposal requires any of the following actions (e.g., permits) by other Agencies and attach copies of relevant correspondence.* It is not necessary to attach voluminous permit applications if a single cover Agency transmittal will indicate that a permit has been granted. Permitting issues can be described in the relevant resource discussion in sections B-S above.

☐ **Section 106** *Historic and Culturally Significant Properties*

☒ **Section 401/404** *Wetlands and Water*

☒ **USCG 404** *Navigable Waterways*

☐ **Executive Orders** *Wetlands, Floodplains, Environmental Justice*

☐ **Clean Air Act** *Air Quality*

☐ **Endangered Species Act** *Threatened and Endangered Biological Resources*

☐ **Magnuson-Stevens Fishery Conservation and Management Act** *Essential Fish Habitat*

☐ **Safe Drinking Water Act**

☐ **Other State or Local Requirements** (Describe)

X. **Mitigation:** Describe mitigation measures which address identified impacts and have been incorporated into the proposal, if any.

CP's consultant-developed environmental reports on Bridges 46 and 47 (Exhibits L.4 and L.5) detail recommended actions for minimizing the impacts during construction. These actions include:

- using only clean fill material

- providing soil erosion and sediment control measures during construction, and performing construction at periods of low flow

- properly disposing of all removed structural materials

- avoiding wetlands during construction whenever possible

All work will be performed in accordance with these recommendations. Soil erosion and sediment control (SE/SC) best management practices will also be used during construction, since the Lake County Stormwater Management Commission requires that soil and sediment control plans be submitted in order for a construction permit to be issued.

Appendix

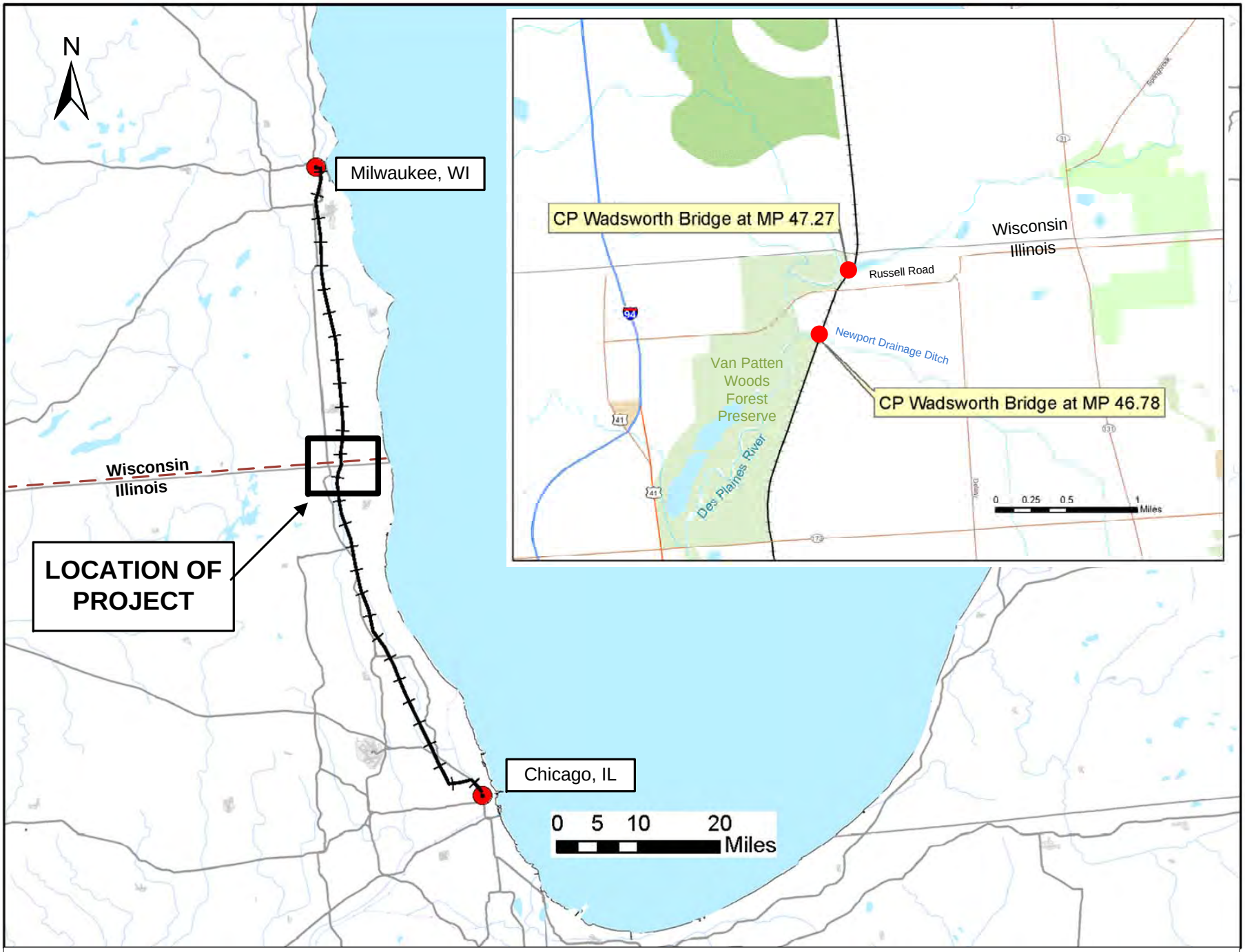

CP Wadsworth Bridge Replacements
Project Location Map
Figure B.1

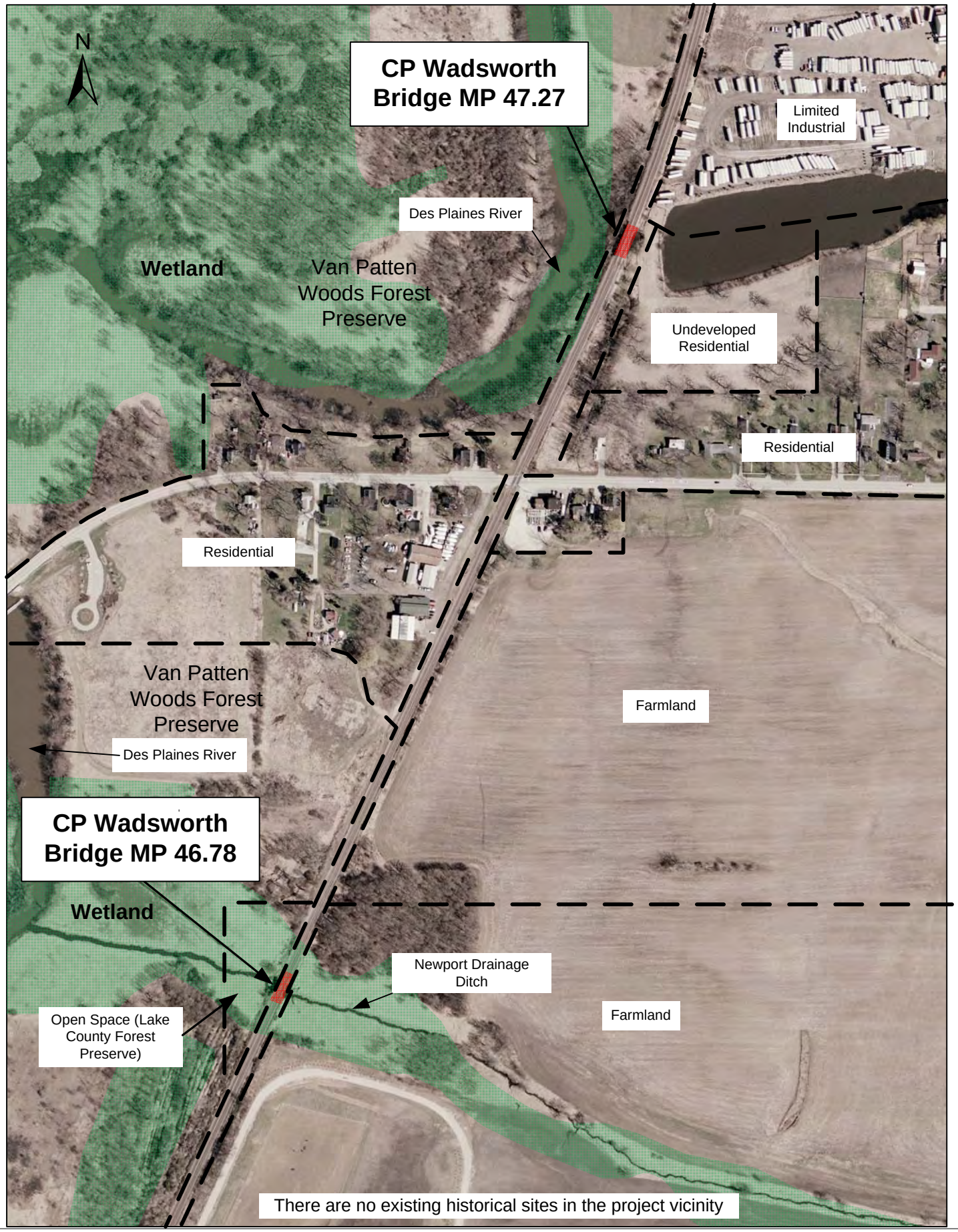

CP Wadsworth Bridge Replacements
Land Usage Map
Figure B.2

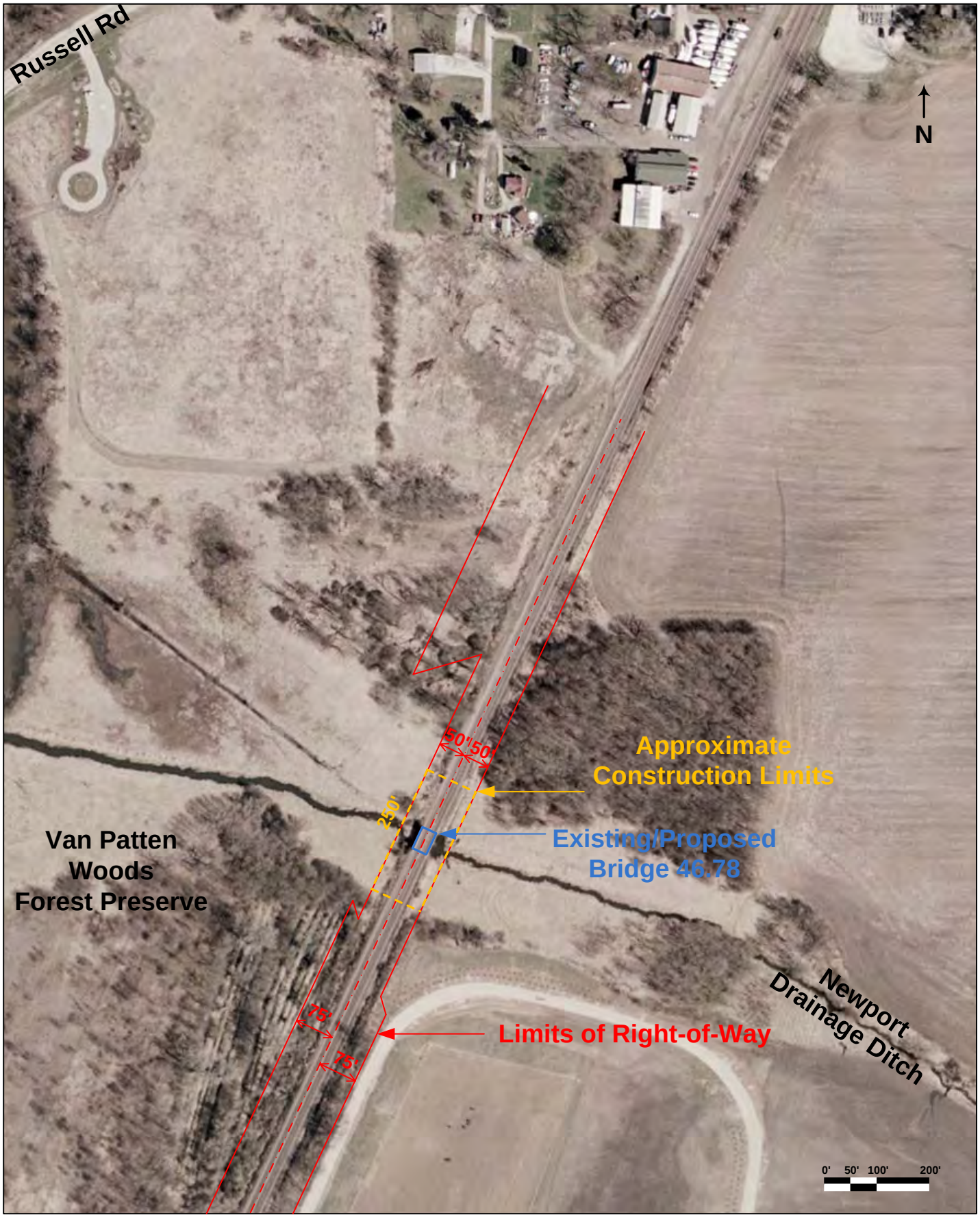

CP Bridge 46.78
Construction Limits and Right-of-Way Map
Figure B.3

CP Bridge 47.27
Construction Limits and Right-of-Way Map
Figure B.4

Illinois Department of Transportation
2300 South Dirksen Parkway / Springfield, Illinois / 62764

May 7, 2010

Lake County
Canadian Pacific C & M Sub
Bridges A-202 & A-206

IDOT Seq. # 15917

FEDERAL 106 PROJECT

NO HISTORIC PROPERTIES AFFECTED

Ms. Anne Haaker
Deputy State Historic Preservation Officer
Illinois Historic Preservation Agency
Springfield, Illinois 62701

Dear Ms. Haaker:

Attached is an Environment Survey Request and photographic documentation concerning the project referenced above. Two bridges are included within the project right of way. The bridges are both heavily deteriorated concrete pillar structures. Neither of the bridges is eligible for inclusion in the National Register of Historic places under Criterion C. No new right-of-way or construction easements will be required for these proposed projects.

In accordance with the established procedure for coordination of proposed Illinois Department of Transportation projects, we request the concurrence of the State Historic Preservation Officer in our determination that no historic properties, subject to protection under Section 106 of the National Historic Preservation Act of 1966 as amended, will be affected by the proposed construction activities.

Very truly yours,

John A. Walthall, PhD
Cultural Resources Unit

CONCUR

By: Anne E. Haaker
Deputy State Historic Preservation Officer
Date: 5/7/10

Exhibit C.1

Illinois Department of Transportation
Division of Public and Intermodal Transportation
100 West Randolph Street / Suite 6-600 / Chicago, Illinois / 60601

May 11, 2010

Ms. Janet M. Odeshoo
Deputy Regional Administrator
Federal Emergency Management Agency Region 5
536 South Clark Street, 6th Floor
Chicago, IL 60605

Re: Categorical Exclusion
Canadian Pacific Railway Bridge Replacements
Mile Posts 46.78 and 47.27, Wadsworth, IL

Dear Ms. Odeshoo,

The Illinois Department of Transportation (IDOT), in cooperation with the Federal Railroad Administration (FRA) is initiating the information-gathering phase of the National Environmental Policy Act (NEPA) documents being prepared for the proposed improvements included in the Canadian Pacific Railway (CP) Wadsworth Bridge Replacement. Because the project may affect your area of expertise, your facilities, or your activities or programs, we are seeking your comments on this project.

This project, which is located in the Chicago to Milwaukee corridor, will encompass the final design and construction of two bridges at mileposts 46.78 and 47.27 of the CP Chicago & Milwaukee (C&M) subdivision. The bridges are located on the north and south sides of CP's intersection with Russell Road near Wadsworth, IL, over drainage ditches that feed into the nearby Des Plaines River. The attached project map shows the location of the proposed bridge replacements.

The existing bridges at these two locations need replacement to meet the reliability and speed needs of existing and future passenger rail service in the Chicago to Milwaukee corridor. Without replacement of these bridges, speed restrictions on passenger rail traffic may be imposed due to the deteriorating conditions of the bridges. These speed restrictions will adversely affect the 14 daily passenger trains that travel between Chicago and Milwaukee on Amtrak's Hiawatha, and the two daily Amtrak Empire Builder trains that travel between Chicago and Seattle/Portland. In addition, replacement of the bridges will also allow for higher train speeds as part of the proposed high-speed rail on the Chicago-Milwaukee-Twin Cities route.

As part of the NEPA process, the environmental effects of any federal undertaking are analyzed under one of three NEPA classifications. The replacements of the CP Wadsworth bridges are being analyzed under the classification of a 'Categorical Exclusion'. As part of the guidance for maintaining NEPA compliance issued by the Federal Railroad Administration in 2009, the FRA listed the 'replacement of an existing railroad bridge that does not require a significant amount of right-of-way' as one of thirteen proposal types that qualify for a Categorical Exclusion

determination. A Categorical Exclusion states that the actions related to a federally funded project are determined to have no significant impact on the surrounding environment.

The comments and material you supply will be used to determine if the proposed improvements may have impacts that warrant further consideration. Your comments will be incorporated into the environmental planning process and environmental documents as appropriate. Because this effort is part of an FRA grant application, we are operating under an accelerated schedule and would appreciate comments by May 18, 2010.

A draft of the Categorical Exclusion will be submitted with our FRA grant application, due on May 19th, and we can send you a copy for your review and comment at the time of the FRA grant application submittal. Please let us know if you would like a copy of the draft Categorical Exclusion for your review.

If you have any questions about the project, please do not hesitate to contact me at (312) 793-4222, or by email at george.weber@Illinois.gov.

The Illinois Department of Transportation thanks you in advance for your prompt review and responses to our request for comments.

Sincerely,

George Weber
Bureau of Railroads, Bureau Chief

Enclosures:
Map of Project Limits

cc: Wendy Messenger, Federal Railroad Administration
Walter Zyznieuski, Illinois Department of Transportation
Phil Pasterak, Parsons Brinckerhoff

Illinois Department of Transportation
Division of Public and Intermodal Transportation
100 West Randolph Street / Suite 6-600 / Chicago, Illinois / 60601

May 11, 2010

Jason Maga
Senior Officer, Host Railroad Policy
Amtrak
60 Massachusetts Avenue NE, 2E-111
Washington, DC 20002

Re: Categorical Exclusion
Canadian Pacific Railway Bridge Replacements
Mile Posts 46.78 and 47.27, Wadsworth, IL

Dear Mr. Maga:

The Illinois Department of Transportation (IDOT), in cooperation with the Federal Railroad Administration (FRA) is initiating the information-gathering phase of the National Environmental Policy Act (NEPA) documents being prepared for the proposed improvements included in the Canadian Pacific Railway (CP) Wadsworth Bridge Replacement. Because the project may affect your area of expertise, your facilities, or your activities or programs, we are seeking your comments on this project.

This project, which is located in the Chicago to Milwaukee corridor, will encompass the final design and construction of two bridges at mileposts 46.78 and 47.27 of the CP Chicago & Milwaukee (C&M) subdivision. The bridges are located on the north and south sides of CP's intersection with Russell Road near Wadsworth, IL, over drainage ditches that feed into the nearby Des Plaines River. The attached project map shows the location of the proposed bridge replacements.

The existing bridges at these two locations need replacement to meet the reliability and speed needs of existing and future passenger rail service in the Chicago to Milwaukee corridor. Without replacement of these bridges, speed restrictions on passenger rail traffic may be imposed due to the deteriorating conditions of the bridges. These speed restrictions will adversely affect the 14 daily passenger trains that travel between Chicago and Milwaukee on Amtrak's Hiawatha, and the two daily Amtrak Empire Builder trains that travel between Chicago and Seattle/Portland. In addition, replacement of the bridges will also allow for higher train speeds as part of the proposed high-speed rail on the Chicago-Milwaukee-Twin Cities route.

As part of the NEPA process, the environmental effects of any federal undertaking are analyzed under one of three NEPA classifications. The replacements of the CP Wadsworth bridges are being analyzed under the classification of a 'Categorical Exclusion'. As part of the guidance for maintaining NEPA compliance issued by the Federal Railroad Administration in 2009, the FRA listed the 'replacement of an existing railroad bridge that does not require a significant amount of right-of-way' as one of thirteen proposal types that qualify for a Categorical Exclusion

determination. A Categorical Exclusion states that the actions related to a federally funded project are determined to have no significant impact on the surrounding environment.

The comments and material you supply will be used to determine if the proposed improvements may have impacts that warrant further consideration. Your comments will be incorporated into the environmental planning process and environmental documents as appropriate. Because this effort is part of an FRA grant application, we are operating under an accelerated schedule and would appreciate comments by May 18, 2010.

A draft of the Categorical Exclusion will be submitted with our FRA grant application, due on May 19th, and we can send you a copy for your review and comment at the time of the FRA grant application submittal. Please let us know if you would like a copy of the draft Categorical Exclusion for your review.

If you have any questions about the project, please do not hesitate to contact me at (312) 793-4222, or by email at george.weber@Illinois.gov.

The Illinois Department of Transportation thanks you in advance for your prompt review and responses to our request for comments.

Sincerely,

George Weber
Bureau of Railroads, Bureau Chief

Enclosures:
Map of Project Limits

cc: Wendy Messenger, Federal Railroad Administration
Walter Zyznieuski, Illinois Department of Transportation
Phil Pasterak, Parsons Brinckerhoff

Illinois Department of Transportation
Division of Public and Intermodal Transportation
100 West Randolph Street / Suite 6-600 / Chicago, Illinois / 60601

May 11, 2010

Mr. Mitch Isoe
U.S. Army Corps of Engineers
Chicago District
111 North Canal Street, Suite 600
Chicago, IL 60606

Re: Categorical Exclusion
Canadian Pacific Railway Bridge Replacements
Mile Posts 46.78 and 47.27, Wadsworth, IL

Dear Mr. Isoe:

The Illinois Department of Transportation (IDOT), in cooperation with the Federal Railroad Administration (FRA) is initiating the information-gathering phase of the National Environmental Policy Act (NEPA) documents being prepared for the proposed improvements included in the Canadian Pacific Railway (CP) Wadsworth Bridge Replacement. Because the project may affect your area of expertise, your facilities, or your activities or programs, we are seeking your comments on this project.

This project, which is located in the Chicago to Milwaukee corridor, will encompass the final design and construction of two bridges at mileposts 46.78 and 47.27 of the CP Chicago & Milwaukee (C&M) subdivision. The bridges are located on the north and south sides of CP's intersection with Russell Road near Wadsworth, IL, over drainage ditches that feed into the nearby Des Plaines River. The attached project map shows the location of the proposed bridge replacements.

The existing bridges at these two locations need replacement to meet the reliability and speed needs of existing and future passenger rail service in the Chicago to Milwaukee corridor. Without replacement of these bridges, speed restrictions on passenger rail traffic may be imposed due to the deteriorating conditions of the bridges. These speed restrictions will adversely affect the 14 daily passenger trains that travel between Chicago and Milwaukee on Amtrak's Hiawatha, and the two daily Amtrak Empire Builder trains that travel between Chicago and Seattle/Portland. In addition, replacement of the bridges will also allow for higher train speeds as part of the proposed high-speed rail on the Chicago-Milwaukee-Twin Cities route.

As part of the NEPA process, the environmental effects of any federal undertaking are analyzed under one of three NEPA classifications. The replacements of the CP Wadsworth bridges are being analyzed under the classification of a 'Categorical Exclusion'. As part of the guidance for maintaining NEPA compliance issued by the Federal Railroad Administration in 2009, the FRA listed the 'replacement of an existing railroad bridge that does not require a significant amount of right-of-way' as one of thirteen proposal types that qualify for a Categorical Exclusion

determination. A Categorical Exclusion states that the actions related to a federally funded project are determined to have no significant impact on the surrounding environment.

The comments and material you supply will be used to determine if the proposed improvements may have impacts that warrant further consideration. Your comments will be incorporated into the environmental planning process and environmental documents as appropriate. Because this effort is part of an FRA grant application, we are operating under an accelerated schedule and would appreciate comments by May 18, 2010.

A draft of the Categorical Exclusion will be submitted with our FRA grant application, due on May 19th, and we can send you a copy for your review and comment at the time of the FRA grant application submittal. Please let us know if you would like a copy of the draft Categorical Exclusion for your review.

If you have any questions about the project, please do not hesitate to contact me at (312) 793-4222, or by email at george.weber@Illinois.gov.

The Illinois Department of Transportation thanks you in advance for your prompt review and responses to our request for comments.

Sincerely,

George Weber
Bureau of Railroads, Bureau Chief

Enclosures:
Map of Project Limits

cc: Wendy Messenger, Federal Railroad Administration
Walter Zyznieuski, Illinois Department of Transportation
Phil Pasterak, Parsons Brinckerhoff

Illinois Department of Transportation
Division of Public and Intermodal Transportation
100 West Randolph Street / Suite 6-600 / Chicago, Illinois / 60601

May 11, 2010

Ken Westlake
US EPA Region 5 (IL, IN, MI, MN, OH, WI)
77 W. Jackson Blvd.
Chicago, IL 60604

Re: Categorical Exclusion
Canadian Pacific Railway Bridge Replacements
Mile Posts 46.78 and 47.27, Wadsworth, IL

Dear Mr. Westlake:

The Illinois Department of Transportation (IDOT), in cooperation with the Federal Railroad Administration (FRA) is initiating the information-gathering phase of the National Environmental Policy Act (NEPA) documents being prepared for the proposed improvements included in the Canadian Pacific Railway (CP) Wadsworth Bridge Replacement. Because the project may affect your area of expertise, your facilities, or your activities or programs, we are seeking your comments on this project.

This project, which is located in the Chicago to Milwaukee corridor, will encompass the final design and construction of two bridges at mileposts 46.78 and 47.27 of the CP Chicago & Milwaukee (C&M) subdivision. The bridges are located on the north and south sides of CP's intersection with Russell Road near Wadsworth, IL, over drainage ditches that feed into the nearby Des Plaines River. The attached project map shows the location of the proposed bridge replacements.

The existing bridges at these two locations need replacement to meet the reliability and speed needs of existing and future passenger rail service in the Chicago to Milwaukee corridor. Without replacement of these bridges, speed restrictions on passenger rail traffic may be imposed due to the deteriorating conditions of the bridges. These speed restrictions will adversely affect the 14 daily passenger trains that travel between Chicago and Milwaukee on Amtrak's Hiawatha, and the two daily Amtrak Empire Builder trains that travel between Chicago and Seattle/Portland. In addition, replacement of the bridges will also allow for higher train speeds as part of the proposed high-speed rail on the Chicago-Milwaukee-Twin Cities route.

As part of the NEPA process, the environmental effects of any federal undertaking are analyzed under one of three NEPA classifications. The replacements of the CP Wadsworth bridges are being analyzed under the classification of a 'Categorical Exclusion'. As part of the guidance for maintaining NEPA compliance issued by the Federal Railroad Administration in 2009, the FRA listed the 'replacement of an existing railroad bridge that does not require a significant amount of right-of-way' as one of thirteen proposal types that qualify for a Categorical Exclusion determination. A Categorical Exclusion states that the actions related to a federally funded project are determined to have no significant impact on the surrounding environment.

The comments and material you supply will be used to determine if the proposed improvements may have impacts that warrant further consideration. Your comments will be incorporated into the environmental planning process and environmental documents as appropriate. Because this effort is part of an FRA grant application, we are operating under an accelerated schedule and would appreciate comments by May 18, 2010.

A draft of the Categorical Exclusion will be submitted with our FRA grant application, due on May 19th, and we can send you a copy for your review and comment at the time of the FRA grant application submittal. Please let us know if you would like a copy of the draft Categorical Exclusion for your review.

If you have any questions about the project, please do not hesitate to contact me at (312) 793-4222, or by email at george.weber@Illinois.gov.

The Illinois Department of Transportation thanks you in advance for your prompt review and responses to our request for comments.

Sincerely,

George Weber
Bureau of Railroads, Bureau Chief

Enclosures:
Map of Project Limits

cc: Wendy Messenger, Federal Railroad Administration
Walter Zyznieuski, Illinois Department of Transportation
Phil Pasterak, Parsons Brinckerhoff

Illinois Department of Transportation
Division of Public and Intermodal Transportation
100 West Randolph Street / Suite 6-600 / Chicago, Illinois / 60601

May 11, 2010

Mr. Thomas Hahn
Executive Director
Lake County Forest Preserve
2000 N. Milwaukee Avenue
Libertyville, IL 60048

Re: Categorical Exclusion
Canadian Pacific Railway Bridge Replacements
Mile Posts 46.78 and 47.27, Wadsworth, IL

Dear Mr. Hahn:

The Illinois Department of Transportation (IDOT), in cooperation with the Federal Railroad Administration (FRA) is initiating the information-gathering phase of the National Environmental Policy Act (NEPA) documents being prepared for the proposed improvements included in the Canadian Pacific Railway (CP) Wadsworth Bridge Replacement. Because the project may affect your area of expertise, your facilities, or your activities or programs, we are seeking your comments on this project.

This project, which is located in the Chicago to Milwaukee corridor, will encompass the final design and construction of two bridges at mileposts 46.78 and 47.27 of the CP Chicago & Milwaukee (C&M) subdivision. The bridges are located on the north and south sides of CP's intersection with Russell Road near Wadsworth, IL, over drainage ditches that feed into the nearby Des Plaines River. The attached project map shows the location of the proposed bridge replacements.

The existing bridges at these two locations need replacement to meet the reliability and speed needs of existing and future passenger rail service in the Chicago to Milwaukee corridor. Without replacement of these bridges, speed restrictions on passenger rail traffic may be imposed due to the deteriorating conditions of the bridges. These speed restrictions will adversely affect the 14 daily passenger trains that travel between Chicago and Milwaukee on Amtrak's Hiawatha, and the two daily Amtrak Empire Builder trains that travel between Chicago and Seattle/Portland. In addition, replacement of the bridges will also allow for higher train speeds as part of the proposed high-speed rail on the Chicago-Milwaukee-Twin Cities route.

As part of the NEPA process, the environmental effects of any federal undertaking are analyzed under one of three NEPA classifications. The replacements of the CP Wadsworth bridges are being analyzed under the classification of a 'Categorical Exclusion'. As part of the guidance for maintaining NEPA compliance issued by the Federal Railroad Administration in 2009, the FRA listed the 'replacement of an existing railroad bridge that does not require a significant amount of right-of-way' as one of thirteen proposal types that qualify for a Categorical Exclusion

determination. A Categorical Exclusion states that the actions related to a federally funded project are determined to have no significant impact on the surrounding environment.

The comments and material you supply will be used to determine if the proposed improvements may have impacts that warrant further consideration. Your comments will be incorporated into the environmental planning process and environmental documents as appropriate. Because this effort is part of an FRA grant application, we are operating under an accelerated schedule and would appreciate comments by May 18, 2010.

A draft of the Categorical Exclusion will be submitted with our FRA grant application, due on May 19th, and we can send you a copy for your review and comment at the time of the FRA grant application submittal. Please let us know if you would like a copy of the draft Categorical Exclusion for your review.

If you have any questions about the project, please do not hesitate to contact me at (312) 793-4222, or by email at george.weber@Illinois.gov.

The Illinois Department of Transportation thanks you in advance for your prompt review and responses to our request for comments.

Sincerely,

George Weber
Bureau of Railroads, Bureau Chief

Enclosures:
Map of Project Limits

cc: Wendy Messenger, Federal Railroad Administration
Walter Zyznieuski, Illinois Department of Transportation
Phil Pasterak, Parsons Brinckerhoff

Illinois Department of Transportation
Division of Public and Intermodal Transportation
100 West Randolph Street / Suite 6-600 / Chicago, Illinois / 60601

May 11, 2010

Mimarcelino Figueroa
Nursery Manager
Gendreau Nusery Inc.
42628 N. Kilbourne Road
Zion, IL 60099

Re: Categorical Exclusion
Canadian Pacific Railway Bridge Replacements
Mile Posts 46.78 and 47.27, Wadsworth, IL

Dear Mr. Figueroa:

The Illinois Department of Transportation (IDOT), in cooperation with the Federal Railroad Administration (FRA) is initiating the information-gathering phase of the National Environmental Policy Act (NEPA) documents being prepared for the proposed improvements included in the Canadian Pacific Railway (CP) Wadsworth Bridge Replacement. Because the project may affect your area of expertise, your facilities, or your activities or programs, we are seeking your comments on this project.

This project, which is located in the Chicago to Milwaukee corridor, will encompass the final design and construction of two bridges at mileposts 46.78 and 47.27 of the CP Chicago & Milwaukee (C&M) subdivision. The bridges are located on the north and south sides of CP's intersection with Russell Road near Wadsworth, IL, over drainage ditches that feed into the nearby Des Plaines River. The attached project map shows the location of the proposed bridge replacements.

The existing bridges at these two locations need replacement to meet the reliability and speed needs of existing and future passenger rail service in the Chicago to Milwaukee corridor. Without replacement of these bridges, speed restrictions on passenger rail traffic may be imposed due to the deteriorating conditions of the bridges. These speed restrictions will adversely affect the 14 daily passenger trains that travel between Chicago and Milwaukee on Amtrak's Hiawatha, and the two daily Amtrak Empire Builder trains that travel between Chicago and Seattle/Portland. In addition, replacement of the bridges will also allow for higher train speeds as part of the proposed high-speed rail on the Chicago-Milwaukee-Twin Cities route.

As part of the NEPA process, the environmental effects of any federal undertaking are analyzed under one of three NEPA classifications. The replacements of the CP Wadsworth bridges are being analyzed under the classification of a 'Categorical Exclusion'. As part of the guidance for maintaining NEPA compliance issued by the Federal Railroad Administration in 2009, the FRA listed the 'replacement of an existing railroad bridge that does not require a significant amount of right-of-way' as one of thirteen proposal types that qualify for a Categorical Exclusion

determination. A Categorical Exclusion states that the actions related to a federally funded project are determined to have no significant impact on the surrounding environment.

The comments and material you supply will be used to determine if the proposed improvements may have impacts that warrant further consideration. Your comments will be incorporated into the environmental planning process and environmental documents as appropriate. Because this effort is part of an FRA grant application, we are operating under an accelerated schedule and would appreciate comments by May 18, 2010.

A draft of the Categorical Exclusion will be submitted with our FRA grant application, due on May 19th, and we can send you a copy for your review and comment at the time of the FRA grant application submittal. Please let us know if you would like a copy of the draft Categorical Exclusion for your review.

If you have any questions about the project, please do not hesitate to contact me at (312) 793-4222, or by email at george.weber@Illinois.gov.

The Illinois Department of Transportation thanks you in advance for your prompt review and responses to our request for comments.

Sincerely,

George Weber
Bureau of Railroads, Bureau Chief

Enclosures:
Map of Project Limits

cc: Wendy Messenger, Federal Railroad Administration
Walter Zyznieuski, Illinois Department of Transportation
Phil Pasterak, Parsons Brinckerhoff

Illinois Department of Transportation
Division of Public and Intermodal Transportation
100 West Randolph Street / Suite 6-600 / Chicago, Illinois / 60601

May 11, 2010

Mr. Mike Stead
Illinois Commerce Commission
Rail Safety Section
527 East Capital Avenue
Springfield, IL 62701

Re: Categorical Exclusion
Canadian Pacific Railway Bridge Replacements
Mile Posts 46.78 and 47.27, Wadsworth, IL

Dear Mr. Stead:

The Illinois Department of Transportation (IDOT), in cooperation with the Federal Railroad Administration (FRA) is initiating the information-gathering phase of the National Environmental Policy Act (NEPA) documents being prepared for the proposed improvements included in the Canadian Pacific Railway (CP) Wadsworth Bridge Replacement. Because the project may affect your area of expertise, your facilities, or your activities or programs, we are seeking your comments on this project.

This project, which is located in the Chicago to Milwaukee corridor, will encompass the final design and construction of two bridges at mileposts 46.78 and 47.27 of the CP Chicago & Milwaukee (C&M) subdivision. The bridges are located on the north and south sides of CP's intersection with Russell Road near Wadsworth, IL, over drainage ditches that feed into the nearby Des Plaines River. The attached project map shows the location of the proposed bridge replacements.

The existing bridges at these two locations need replacement to meet the reliability and speed needs of existing and future passenger rail service in the Chicago to Milwaukee corridor. Without replacement of these bridges, speed restrictions on passenger rail traffic may be imposed due to the deteriorating conditions of the bridges. These speed restrictions will adversely affect the 14 daily passenger trains that travel between Chicago and Milwaukee on Amtrak's Hiawatha, and the two daily Amtrak Empire Builder trains that travel between Chicago and Seattle/Portland. In addition, replacement of the bridges will also allow for higher train speeds as part of the proposed high-speed rail on the Chicago-Milwaukee-Twin Cities route.

As part of the NEPA process, the environmental effects of any federal undertaking are analyzed under one of three NEPA classifications. The replacements of the CP Wadsworth bridges are being analyzed under the classification of a 'Categorical Exclusion'. As part of the guidance for maintaining NEPA compliance issued by the Federal Railroad Administration in 2009, the FRA listed the 'replacement of an existing railroad bridge that does not require a significant amount of right-of-way' as one of thirteen proposal types that qualify for a Categorical Exclusion

determination. A Categorical Exclusion states that the actions related to a federally funded project are determined to have no significant impact on the surrounding environment.

The comments and material you supply will be used to determine if the proposed improvements may have impacts that warrant further consideration. Your comments will be incorporated into the environmental planning process and environmental documents as appropriate. Because this effort is part of an FRA grant application, we are operating under an accelerated schedule and would appreciate comments by May 18, 2010.

A draft of the Categorical Exclusion will be submitted with our FRA grant application, due on May 19th, and we can send you a copy for your review and comment at the time of the FRA grant application submittal. Please let us know if you would like a copy of the draft Categorical Exclusion for your review.

If you have any questions about the project, please do not hesitate to contact me at (312) 793-4222, or by email at george.weber@Illinois.gov.

The Illinois Department of Transportation thanks you in advance for your prompt review and responses to our request for comments.

Sincerely,

George Weber
Bureau of Railroads, Bureau Chief

Enclosures:
Map of Project Limits

cc: Wendy Messenger, Federal Railroad Administration
Walter Zyznieuski, Illinois Department of Transportation
Phil Pasterak, Parsons Brinckerhoff

Illinois Department of Transportation
Division of Public and Intermodal Transportation
100 West Randolph Street / Suite 6-600 / Chicago, Illinois / 60601

May 11, 2010

Ms. Terry Savko
State of Illinois Department of Agriculture
P.O. Box 19281
Springfield, IL 62794-9281

Re: Categorical Exclusion
Canadian Pacific Railway Bridge Replacements
Mile Posts 46.78 and 47.27, Wadsworth, IL

Dear Ms. Savko,

The Illinois Department of Transportation (IDOT), in cooperation with the Federal Railroad Administration (FRA) is initiating the information-gathering phase of the National Environmental Policy Act (NEPA) documents being prepared for the proposed improvements included in the Canadian Pacific Railway (CP) Wadsworth Bridge Replacement. Because the project may affect your area of expertise, your facilities, or your activities or programs, we are seeking your comments on this project.

This project, which is located in the Chicago to Milwaukee corridor, will encompass the final design and construction of two bridges at mileposts 46.78 and 47.27 of the CP Chicago & Milwaukee (C&M) subdivision. The bridges are located on the north and south sides of CP's intersection with Russell Road near Wadsworth, IL, over drainage ditches that feed into the nearby Des Plaines River. The attached project map shows the location of the proposed bridge replacements.

The existing bridges at these two locations need replacement to meet the reliability and speed needs of existing and future passenger rail service in the Chicago to Milwaukee corridor. Without replacement of these bridges, speed restrictions on passenger rail traffic may be imposed due to the deteriorating conditions of the bridges. These speed restrictions will adversely affect the 14 daily passenger trains that travel between Chicago and Milwaukee on Amtrak's Hiawatha, and the two daily Amtrak Empire Builder trains that travel between Chicago and Seattle/Portland. In addition, replacement of the bridges will also allow for higher train speeds as part of the proposed high-speed rail on the Chicago-Milwaukee-Twin Cities route.

As part of the NEPA process, the environmental effects of any federal undertaking are analyzed under one of three NEPA classifications. The replacements of the CP Wadsworth bridges are being analyzed under the classification of a 'Categorical Exclusion'. As part of the guidance for maintaining NEPA compliance issued by the Federal Railroad Administration in 2009, the FRA listed the 'replacement of an existing railroad bridge that does not require a significant amount of right-of-way' as one of thirteen proposal types that qualify for a Categorical Exclusion determination. A Categorical Exclusion states that the actions related to a federally funded project are determined to have no significant impact on the surrounding environment.

The comments and material you supply will be used to determine if the proposed improvements may have impacts that warrant further consideration. Your comments will be incorporated into the environmental planning process and environmental documents as appropriate. Because this effort is part of an FRA grant application, we are operating under an accelerated schedule and would appreciate comments by May 18, 2010.

A draft of the Categorical Exclusion will be submitted with our FRA grant application, due on May 19th, and we can send you a copy for your review and comment at the time of the FRA grant application submittal. Please let us know if you would like a copy of the draft Categorical Exclusion for your review.

If you have any questions about the project, please do not hesitate to contact me at (312) 793-4222, or by email at george.weber@Illinois.gov.

The Illinois Department of Transportation thanks you in advance for your prompt review and responses to our request for comments.

Sincerely,

George Weber
Bureau of Railroads, Bureau Chief

Enclosures:
Map of Project Limits

cc: Wendy Messenger, Federal Railroad Administration
Walter Zyznieuski, Illinois Department of Transportation
Phil Pasterak, Parsons Brinckerhoff

Illinois Department of Transportation
Division of Public and Intermodal Transportation
100 West Randolph Street / Suite 6-600 / Chicago, Illinois / 60601

May 11, 2010

Mr. Douglas P. Scott, Director
Illinois Environmental Protection Agency
P.O. Box 19276
Springfield, IL 62794-9276

Re: Categorical Exclusion
Canadian Pacific Railway Bridge Replacements
Mile Posts 46.78 and 47.27, Wadsworth, IL

Dear Mr. Scott,

The Illinois Department of Transportation (IDOT), in cooperation with the Federal Railroad Administration (FRA) is initiating the information-gathering phase of the National Environmental Policy Act (NEPA) documents being prepared for the proposed improvements included in the Canadian Pacific Railway (CP) Wadsworth Bridge Replacement. Because the project may affect your area of expertise, your facilities, or your activities or programs, we are seeking your comments on this project.

This project, which is located in the Chicago to Milwaukee corridor, will encompass the final design and construction of two bridges at mileposts 46.78 and 47.27 of the CP Chicago & Milwaukee (C&M) subdivision. The bridges are located on the north and south sides of CP's intersection with Russell Road near Wadsworth, IL, over drainage ditches that feed into the nearby Des Plaines River. The attached project map shows the location of the proposed bridge replacements.

The existing bridges at these two locations need replacement to meet the reliability and speed needs of existing and future passenger rail service in the Chicago to Milwaukee corridor. Without replacement of these bridges, speed restrictions on passenger rail traffic may be imposed due to the deteriorating conditions of the bridges. These speed restrictions will adversely affect the 14 daily passenger trains that travel between Chicago and Milwaukee on Amtrak's Hiawatha, and the two daily Amtrak Empire Builder trains that travel between Chicago and Seattle/Portland. In addition, replacement of the bridges will also allow for higher train speeds as part of the proposed high-speed rail on the Chicago-Milwaukee-Twin Cities route.

As part of the NEPA process, the environmental effects of any federal undertaking are analyzed under one of three NEPA classifications. The replacements of the CP Wadsworth bridges are being analyzed under the classification of a 'Categorical Exclusion'. As part of the guidance for maintaining NEPA compliance issued by the Federal Railroad Administration in 2009, the FRA listed the 'replacement of an existing railroad bridge that does not require a significant amount of right-of-way' as one of thirteen proposal types that qualify for a Categorical Exclusion determination. A Categorical Exclusion states that the actions related to a federally funded project are determined to have no significant impact on the surrounding environment.

The comments and material you supply will be used to determine if the proposed improvements may have impacts that warrant further consideration. Your comments will be incorporated into the environmental planning process and environmental documents as appropriate. Because this effort is part of an FRA grant application, we are operating under an accelerated schedule and would appreciate comments by May 18, 2010.

A draft of the Categorical Exclusion will be submitted with our FRA grant application, due on May 19th, and we can send you a copy for your review and comment at the time of the FRA grant application submittal. Please let us know if you would like a copy of the draft Categorical Exclusion for your review.

If you have any questions about the project, please do not hesitate to contact me at (312) 793-4222, or by email at george.weber@Illinois.gov.

The Illinois Department of Transportation thanks you in advance for your prompt review and responses to our request for comments.

Sincerely,

George Weber
Bureau of Railroads, Bureau Chief

Enclosures:
Map of Project Limits

cc: Wendy Messenger, Federal Railroad Administration
Walter Zyznieuski, Illinois Department of Transportation
Phil Pasterak, Parsons Brinckerhoff

Illinois Department of Transportation
Division of Public and Intermodal Transportation
100 West Randolph Street / Suite 6-600 / Chicago, Illinois / 60601

May 11, 2010

Daniel Krill
Lake County Planning, Building, & Development
18 N. County Street
Waukegan, IL 60085

Re: Categorical Exclusion
Canadian Pacific Railway Bridge Replacements
Mile Posts 46.78 and 47.27, Wadsworth, IL

Dear Mr. Krill:

The Illinois Department of Transportation (IDOT), in cooperation with the Federal Railroad Administration (FRA) is initiating the information-gathering phase of the National Environmental Policy Act (NEPA) documents being prepared for the proposed improvements included in the Canadian Pacific Railway (CP) Wadsworth Bridge Replacement. Because the project may affect your area of expertise, your facilities, or your activities or programs, we are seeking your comments on this project.

This project, which is located in the Chicago to Milwaukee corridor, will encompass the final design and construction of two bridges at mileposts 46.78 and 47.27 of the CP Chicago & Milwaukee (C&M) subdivision. The bridges are located on the north and south sides of CP's intersection with Russell Road near Wadsworth, IL, over drainage ditches that feed into the nearby Des Plaines River. The attached project map shows the location of the proposed bridge replacements.

The existing bridges at these two locations need replacement to meet the reliability and speed needs of existing and future passenger rail service in the Chicago to Milwaukee corridor. Without replacement of these bridges, speed restrictions on passenger rail traffic may be imposed due to the deteriorating conditions of the bridges. These speed restrictions will adversely affect the 14 daily passenger trains that travel between Chicago and Milwaukee on Amtrak's Hiawatha, and the two daily Amtrak Empire Builder trains that travel between Chicago and Seattle/Portland. In addition, replacement of the bridges will also allow for higher train speeds as part of the proposed high-speed rail on the Chicago-Milwaukee-Twin Cities route.

As part of the NEPA process, the environmental effects of any federal undertaking are analyzed under one of three NEPA classifications. The replacements of the CP Wadsworth bridges are being analyzed under the classification of a 'Categorical Exclusion'. As part of the guidance for maintaining NEPA compliance issued by the Federal Railroad Administration in 2009, the FRA listed the 'replacement of an existing railroad bridge that does not require a significant amount of right-of-way' as one of thirteen proposal types that qualify for a Categorical Exclusion determination. A Categorical Exclusion states that the actions related to a federally funded project are determined to have no significant impact on the surrounding environment.

The comments and material you supply will be used to determine if the proposed improvements may have impacts that warrant further consideration. Your comments will be incorporated into the environmental planning process and environmental documents as appropriate. Because this effort is part of an FRA grant application, we are operating under an accelerated schedule and would appreciate comments by May 18, 2010.

A draft of the Categorical Exclusion will be submitted with our FRA grant application, due on May 19th, and we can send you a copy for your review and comment at the time of the FRA grant application submittal. Please let us know if you would like a copy of the draft Categorical Exclusion for your review.

If you have any questions about the project, please do not hesitate to contact me at (312) 793-4222, or by email at george.weber@Illinois.gov.

The Illinois Department of Transportation thanks you in advance for your prompt review and responses to our request for comments.

Sincerely,

George Weber
Bureau of Railroads, Bureau Chief

Enclosures:
Map of Project Limits

cc: Wendy Messenger, Federal Railroad Administration
Walter Zyznieuski, Illinois Department of Transportation
Phil Pasterak, Parsons Brinckerhoff

Illinois Department of Transportation
Division of Public and Intermodal Transportation
100 West Randolph Street / Suite 6-600 / Chicago, Illinois / 60601

May 11, 2010

Robert Gardiner, PE, CFM
Lake County Stormwater Management Commission
333-B Peterson Road
Libertyville, IL 60048

Re: Categorical Exclusion
Canadian Pacific Railway Bridge Replacements
Mile Posts 46.78 and 47.27, Wadsworth, IL

Dear Mr. Gardiner:

The Illinois Department of Transportation (IDOT), in cooperation with the Federal Railroad Administration (FRA) is initiating the information-gathering phase of the National Environmental Policy Act (NEPA) documents being prepared for the proposed improvements included in the Canadian Pacific Railway (CP) Wadsworth Bridge Replacement. Because the project may affect your area of expertise, your facilities, or your activities or programs, we are seeking your comments on this project.

This project, which is located in the Chicago to Milwaukee corridor, will encompass the final design and construction of two bridges at mileposts 46.78 and 47.27 of the CP Chicago & Milwaukee (C&M) subdivision. The bridges are located on the north and south sides of CP's intersection with Russell Road near Wadsworth, IL, over drainage ditches that feed into the nearby Des Plaines River. The attached project map shows the location of the proposed bridge replacements.

The existing bridges at these two locations need replacement to meet the reliability and speed needs of existing and future passenger rail service in the Chicago to Milwaukee corridor. Without replacement of these bridges, speed restrictions on passenger rail traffic may be imposed due to the deteriorating conditions of the bridges. These speed restrictions will adversely affect the 14 daily passenger trains that travel between Chicago and Milwaukee on Amtrak's Hiawatha, and the two daily Amtrak Empire Builder trains that travel between Chicago and Seattle/Portland. In addition, replacement of the bridges will also allow for higher train speeds as part of the proposed high-speed rail on the Chicago-Milwaukee-Twin Cities route.

As part of the NEPA process, the environmental effects of any federal undertaking are analyzed under one of three NEPA classifications. The replacements of the CP Wadsworth bridges are being analyzed under the classification of a 'Categorical Exclusion'. As part of the guidance for maintaining NEPA compliance issued by the Federal Railroad Administration in 2009, the FRA listed the 'replacement of an existing railroad bridge that does not require a significant amount of right-of-way' as one of thirteen proposal types that qualify for a Categorical Exclusion determination. A Categorical Exclusion states that the actions related to a federally funded project are determined to have no significant impact on the surrounding environment.

The comments and material you supply will be used to determine if the proposed improvements may have impacts that warrant further consideration. Your comments will be incorporated into the environmental planning process and environmental documents as appropriate. Because this effort is part of an FRA grant application, we are operating under an accelerated schedule and would appreciate comments by May 18, 2010.

A draft of the Categorical Exclusion will be submitted with our FRA grant application, due on May 19th, and we can send you a copy for your review and comment at the time of the FRA grant application submittal. Please let us know if you would like a copy of the draft Categorical Exclusion for your review.

If you have any questions about the project, please do not hesitate to contact me at (312) 793-4222, or by email at george.weber@Illinois.gov.

The Illinois Department of Transportation thanks you in advance for your prompt review and responses to our request for comments.

Sincerely,

George Weber
Bureau of Railroads, Bureau Chief

Enclosures:
Map of Project Limits

cc: Wendy Messenger, Federal Railroad Administration
Walter Zyznieuski, Illinois Department of Transportation
Phil Pasterak, Parsons Brinckerhoff

Illinois Department of Transportation
Division of Public and Intermodal Transportation
100 West Randolph Street / Suite 6-600 / Chicago, Illinois / 60601

May 11, 2010

Mr. Thomas Murphy & Ms. Susan Murphy
14660 W. Ingram Drive
Russell, IL 60075

Re: Categorical Exclusion
Canadian Pacific Railway Bridge Replacements
Mile Posts 46.78 and 47.27, Wadsworth, IL

Dear Mr. & Ms. Murphy:

The Illinois Department of Transportation (IDOT), in cooperation with the Federal Railroad Administration (FRA) is initiating the information-gathering phase of the National Environmental Policy Act (NEPA) documents being prepared for the proposed improvements included in the Canadian Pacific Railway (CP) Wadsworth Bridge Replacement. Because the project may affect your area of expertise, your facilities, or your activities or programs, we are seeking your comments on this project.

This project, which is located in the Chicago to Milwaukee corridor, will encompass the final design and construction of two bridges at mileposts 46.78 and 47.27 of the CP Chicago & Milwaukee (C&M) subdivision. The bridges are located on the north and south sides of CP's intersection with Russell Road near Wadsworth, IL, over drainage ditches that feed into the nearby Des Plaines River. The attached project map shows the location of the proposed bridge replacements.

The existing bridges at these two locations need replacement to meet the reliability and speed needs of existing and future passenger rail service in the Chicago to Milwaukee corridor. Without replacement of these bridges, speed restrictions on passenger rail traffic may be imposed due to the deteriorating conditions of the bridges. These speed restrictions will adversely affect the 14 daily passenger trains that travel between Chicago and Milwaukee on Amtrak's Hiawatha, and the two daily Amtrak Empire Builder trains that travel between Chicago and Seattle/Portland. In addition, replacement of the bridges will also allow for higher train speeds as part of the proposed high-speed rail on the Chicago-Milwaukee-Twin Cities route.

As part of the NEPA process, the environmental effects of any federal undertaking are analyzed under one of three NEPA classifications. The replacements of the CP Wadsworth bridges are being analyzed under the classification of a 'Categorical Exclusion'. As part of the guidance for maintaining NEPA compliance issued by the Federal Railroad Administration in 2009, the FRA listed the 'replacement of an existing railroad bridge that does not require a significant amount of right-of-way' as one of thirteen proposal types that qualify for a Categorical Exclusion determination. A Categorical Exclusion states that the actions related to a federally funded project are determined to have no significant impact on the surrounding environment.

The comments and material you supply will be used to determine if the proposed improvements may have impacts that warrant further consideration. Your comments will be incorporated into the environmental planning process and environmental documents as appropriate. Because this effort is part of an FRA grant application, we are operating under an accelerated schedule and would appreciate comments by May 18, 2010.

A draft of the Categorical Exclusion will be submitted with our FRA grant application, due on May 19th, and we can send you a copy for your review and comment at the time of the FRA grant application submittal. Please let us know if you would like a copy of the draft Categorical Exclusion for your review.

If you have any questions about the project, please do not hesitate to contact me at (312) 793-4222, or by email at george.weber@Illinois.gov.

The Illinois Department of Transportation thanks you in advance for your prompt review and responses to our request for comments.

Sincerely,

George Weber
Bureau of Railroads, Bureau Chief

Enclosures:
Map of Project Limits

cc: Wendy Messenger, Federal Railroad Administration
Walter Zyznieuski, Illinois Department of Transportation
Phil Pasterak, Parsons Brinckerhoff

Illinois Department of Transportation
Division of Public and Intermodal Transportation
100 West Randolph Street / Suite 6-600 / Chicago, Illinois / 60601

May 11, 2010

Mr. Erich Lademann & Ms. Diane Lademann
S&D Truck Repair Inc.
43410 N. Kilbourne Road
Russell, IL 60075

Re: Categorical Exclusion
Canadian Pacific Railway Bridge Replacements
Mile Posts 46.78 and 47.27, Wadsworth, IL

Dear Mr. & Ms. Lademann:

The Illinois Department of Transportation (IDOT), in cooperation with the Federal Railroad Administration (FRA) is initiating the information-gathering phase of the National Environmental Policy Act (NEPA) documents being prepared for the proposed improvements included in the Canadian Pacific Railway (CP) Wadsworth Bridge Replacement. Because the project may affect your area of expertise, your facilities, or your activities or programs, we are seeking your comments on this project.

This project, which is located in the Chicago to Milwaukee corridor, will encompass the final design and construction of two bridges at mileposts 46.78 and 47.27 of the CP Chicago & Milwaukee (C&M) subdivision. The bridges are located on the north and south sides of CP's intersection with Russell Road near Wadsworth, IL, over drainage ditches that feed into the nearby Des Plaines River. The attached project map shows the location of the proposed bridge replacements.

The existing bridges at these two locations need replacement to meet the reliability and speed needs of existing and future passenger rail service in the Chicago to Milwaukee corridor. Without replacement of these bridges, speed restrictions on passenger rail traffic may be imposed due to the deteriorating conditions of the bridges. These speed restrictions will adversely affect the 14 daily passenger trains that travel between Chicago and Milwaukee on Amtrak's Hiawatha, and the two daily Amtrak Empire Builder trains that travel between Chicago and Seattle/Portland. In addition, replacement of the bridges will also allow for higher train speeds as part of the proposed high-speed rail on the Chicago-Milwaukee-Twin Cities route.

As part of the NEPA process, the environmental effects of any federal undertaking are analyzed under one of three NEPA classifications. The replacements of the CP Wadsworth bridges are being analyzed under the classification of a 'Categorical Exclusion'. As part of the guidance for maintaining NEPA compliance issued by the Federal Railroad Administration in 2009, the FRA listed the 'replacement of an existing railroad bridge that does not require a significant amount of right-of-way' as one of thirteen proposal types that qualify for a Categorical Exclusion determination. A Categorical Exclusion states that the actions related to a federally funded project are determined to have no significant impact on the surrounding environment.

The comments and material you supply will be used to determine if the proposed improvements may have impacts that warrant further consideration. Your comments will be incorporated into the environmental planning process and environmental documents as appropriate. Because this effort is part of an FRA grant application, we are operating under an accelerated schedule and would appreciate comments by May 18, 2010.

A draft of the Categorical Exclusion will be submitted with our FRA grant application, due on May 19th, and we can send you a copy for your review and comment at the time of the FRA grant application submittal. Please let us know if you would like a copy of the draft Categorical Exclusion for your review.

If you have any questions about the project, please do not hesitate to contact me at (312) 793-4222, or by email at george.weber@Illinois.gov.

The Illinois Department of Transportation thanks you in advance for your prompt review and responses to our request for comments.

Sincerely,

George Weber
Bureau of Railroads, Bureau Chief

Enclosures:
Map of Project Limits

cc: Wendy Messenger, Federal Railroad Administration
Walter Zyznieuski, Illinois Department of Transportation
Phil Pasterak, Parsons Brinckerhoff

Illinois Department of Transportation
Division of Public and Intermodal Transportation
100 West Randolph Street / Suite 6-600 / Chicago, Illinois / 60601

May 11, 2010

Lieutenant Douglas Salik, USCG
Marine Safety Unit Chicago
Waterways Management
16W215 83rd Street, Suite D
Burr Ridge, IL 60527

Re: Categorical Exclusion
Canadian Pacific Railway Bridge Replacements
Mile Posts 46.78 and 47.27, Wadsworth, IL

Dear Lieutenant Salik:

The Illinois Department of Transportation (IDOT), in cooperation with the Federal Railroad Administration (FRA) is initiating the information-gathering phase of the National Environmental Policy Act (NEPA) documents being prepared for the proposed improvements included in the Canadian Pacific Railway (CP) Wadsworth Bridge Replacement. Because the project may affect your area of expertise, your facilities, or your activities or programs, we are seeking your comments on this project.

This project, which is located in the Chicago to Milwaukee corridor, will encompass the final design and construction of two bridges at mileposts 46.78 and 47.27 of the CP Chicago & Milwaukee (C&M) subdivision. The bridges are located on the north and south sides of CP's intersection with Russell Road near Wadsworth, IL, over drainage ditches that feed into the nearby Des Plaines River. The attached project map shows the location of the proposed bridge replacements.

The existing bridges at these two locations need replacement to meet the reliability and speed needs of existing and future passenger rail service in the Chicago to Milwaukee corridor. Without replacement of these bridges, speed restrictions on passenger rail traffic may be imposed due to the deteriorating conditions of the bridges. These speed restrictions will adversely affect the 14 daily passenger trains that travel between Chicago and Milwaukee on Amtrak's Hiawatha, and the two daily Amtrak Empire Builder trains that travel between Chicago and Seattle/Portland. In addition, replacement of the bridges will also allow for higher train speeds as part of the proposed high-speed rail on the Chicago-Milwaukee-Twin Cities route.

As part of the NEPA process, the environmental effects of any federal undertaking are analyzed under one of three NEPA classifications. The replacements of the CP Wadsworth bridges are being analyzed under the classification of a 'Categorical Exclusion'. As part of the guidance for maintaining NEPA compliance issued by the Federal Railroad Administration in 2009, the FRA listed the 'replacement of an existing railroad bridge that does not require a significant amount of right-of-way' as one of thirteen proposal types that qualify for a Categorical Exclusion

determination. A Categorical Exclusion states that the actions related to a federally funded project are determined to have no significant impact on the surrounding environment.

The comments and material you supply will be used to determine if the proposed improvements may have impacts that warrant further consideration. Your comments will be incorporated into the environmental planning process and environmental documents as appropriate. Because this effort is part of an FRA grant application, we are operating under an accelerated schedule and would appreciate comments by May 18, 2010.

A draft of the Categorical Exclusion will be submitted with our FRA grant application, due on May 19th, and we can send you a copy for your review and comment at the time of the FRA grant application submittal. Please let us know if you would like a copy of the draft Categorical Exclusion for your review.

If you have any questions about the project, please do not hesitate to contact me at (312) 793-4222, or by email at george.weber@Illinois.gov.

The Illinois Department of Transportation thanks you in advance for your prompt review and responses to our request for comments.

Sincerely,

George Weber
Bureau of Railroads, Bureau Chief

Enclosures:
Map of Project Limits

cc: Wendy Messenger, Federal Railroad Administration
Walter Zyznieuski, Illinois Department of Transportation
Phil Pasterak, Parsons Brinckerhoff

Illinois Department of Transportation
Division of Public and Intermodal Transportation
100 West Randolph Street / Suite 6-600 / Chicago, Illinois / 60601

May 11, 2010

Mr. James Johnson
State Conservationist
U.S. Department of Agriculture
2118 W. Park Court
Champaign, IL 61821

Re: Categorical Exclusion
Canadian Pacific Railway Bridge Replacements
Mile Posts 46.78 and 47.27, Wadsworth, IL

Dear Mr. Johnson,

The Illinois Department of Transportation (IDOT), in cooperation with the Federal Railroad Administration (FRA) is initiating the information-gathering phase of the National Environmental Policy Act (NEPA) documents being prepared for the proposed improvements included in the Canadian Pacific Railway (CP) Wadsworth Bridge Replacement. Because the project may affect your area of expertise, your facilities, or your activities or programs, we are seeking your comments on this project.

This project, which is located in the Chicago to Milwaukee corridor, will encompass the final design and construction of two bridges at mileposts 46.78 and 47.27 of the CP Chicago & Milwaukee (C&M) subdivision. The bridges are located on the north and south sides of CP's intersection with Russell Road near Wadsworth, IL, over drainage ditches that feed into the nearby Des Plaines River. The attached project map shows the location of the proposed bridge replacements.

The existing bridges at these two locations need replacement to meet the reliability and speed needs of existing and future passenger rail service in the Chicago to Milwaukee corridor. Without replacement of these bridges, speed restrictions on passenger rail traffic may be imposed due to the deteriorating conditions of the bridges. These speed restrictions will adversely affect the 14 daily passenger trains that travel between Chicago and Milwaukee on Amtrak's Hiawatha, and the two daily Amtrak Empire Builder trains that travel between Chicago and Seattle/Portland. In addition, replacement of the bridges will also allow for higher train speeds as part of the proposed high-speed rail on the Chicago-Milwaukee-Twin Cities route.

As part of the NEPA process, the environmental effects of any federal undertaking are analyzed under one of three NEPA classifications. The replacements of the CP Wadsworth bridges are being analyzed under the classification of a 'Categorical Exclusion'. As part of the guidance for maintaining NEPA compliance issued by the Federal Railroad Administration in 2009, the FRA listed the 'replacement of an existing railroad bridge that does not require a significant amount of right-of-way' as one of thirteen proposal types that qualify for a Categorical Exclusion

determination. A Categorical Exclusion states that the actions related to a federally funded project are determined to have no significant impact on the surrounding environment.

The comments and material you supply will be used to determine if the proposed improvements may have impacts that warrant further consideration. Your comments will be incorporated into the environmental planning process and environmental documents as appropriate. Because this effort is part of an FRA grant application, we are operating under an accelerated schedule and would appreciate comments by May 18, 2010.

A draft of the Categorical Exclusion will be submitted with our FRA grant application, due on May 19th, and we can send you a copy for your review and comment at the time of the FRA grant application submittal. Please let us know if you would like a copy of the draft Categorical Exclusion for your review.

If you have any questions about the project, please do not hesitate to contact me at (312) 793-4222, or by email at george.weber@Illinois.gov.

The Illinois Department of Transportation thanks you in advance for your prompt review and responses to our request for comments.

Sincerely,

George Weber
Bureau of Railroads, Bureau Chief

Enclosures:
Map of Project Limits

cc: Wendy Messenger, Federal Railroad Administration
Walter Zyznieuski, Illinois Department of Transportation
Phil Pasterak, Parsons Brinckerhoff

Illinois Department of Transportation
Division of Public and Intermodal Transportation
100 West Randolph Street / Suite 6-600 / Chicago, Illinois / 60601

May 11, 2010

Ms. Kathy Pollack
U.S. Fish and Wildlife Services
1250 S. Grove Street, Suite 103
Barrington, IL 60010

Re: Categorical Exclusion
Canadian Pacific Railway Bridge Replacements
Mile Posts 46.78 and 47.27, Wadsworth, IL

Dear Ms. Pollack:

The Illinois Department of Transportation (IDOT), in cooperation with the Federal Railroad Administration (FRA) is initiating the information-gathering phase of the National Environmental Policy Act (NEPA) documents being prepared for the proposed improvements included in the Canadian Pacific Railway (CP) Wadsworth Bridge Replacement. Because the project may affect your area of expertise, your facilities, or your activities or programs, we are seeking your comments on this project.

This project, which is located in the Chicago to Milwaukee corridor, will encompass the final design and construction of two bridges at mileposts 46.78 and 47.27 of the CP Chicago & Milwaukee (C&M) subdivision. The bridges are located on the north and south sides of CP's intersection with Russell Road near Wadsworth, IL, over drainage ditches that feed into the nearby Des Plaines River. The attached project map shows the location of the proposed bridge replacements.

The existing bridges at these two locations need replacement to meet the reliability and speed needs of existing and future passenger rail service in the Chicago to Milwaukee corridor. Without replacement of these bridges, speed restrictions on passenger rail traffic may be imposed due to the deteriorating conditions of the bridges. These speed restrictions will adversely affect the 14 daily passenger trains that travel between Chicago and Milwaukee on Amtrak's Hiawatha, and the two daily Amtrak Empire Builder trains that travel between Chicago and Seattle/Portland. In addition, replacement of the bridges will also allow for higher train speeds as part of the proposed high-speed rail on the Chicago-Milwaukee-Twin Cities route.

As part of the NEPA process, the environmental effects of any federal undertaking are analyzed under one of three NEPA classifications. The replacements of the CP Wadsworth bridges are being analyzed under the classification of a 'Categorical Exclusion'. As part of the guidance for maintaining NEPA compliance issued by the Federal Railroad Administration in 2009, the FRA listed the 'replacement of an existing railroad bridge that does not require a significant amount of right-of-way' as one of thirteen proposal types that qualify for a Categorical Exclusion determination. A Categorical Exclusion states that the actions related to a federally funded project are determined to have no significant impact on the surrounding environment.

The comments and material you supply will be used to determine if the proposed improvements may have impacts that warrant further consideration. Your comments will be incorporated into the environmental planning process and environmental documents as appropriate. Because this effort is part of an FRA grant application, we are operating under an accelerated schedule and would appreciate comments by May 18, 2010.

A draft of the Categorical Exclusion will be submitted with our FRA grant application, due on May 19th, and we can send you a copy for your review and comment at the time of the FRA grant application submittal. Please let us know if you would like a copy of the draft Categorical Exclusion for your review.

If you have any questions about the project, please do not hesitate to contact me at (312) 793-4222, or by email at george.weber@Illinois.gov.

The Illinois Department of Transportation thanks you in advance for your prompt review and responses to our request for comments.

Sincerely,

George Weber
Bureau of Railroads, Bureau Chief

Enclosures:
Map of Project Limits

cc: Wendy Messenger, Federal Railroad Administration
Walter Zyznieuski, Illinois Department of Transportation
Phil Pasterak, Parsons Brinckerhoff

Illinois Department of Transportation
Division of Public and Intermodal Transportation
100 West Randolph Street / Suite 6-600 / Chicago, Illinois / 60601

May 11, 2010

Mr. William Gardner
CEO
Wisconsin & Southern Railroad Co.
P.O. Box 90229
Milwaukee, WI 53209

Re: Categorical Exclusion
Canadian Pacific Railway Bridge Replacements
Mile Posts 46.78 and 47.27, Wadsworth, IL

Dear Mr. Gardner:

The Illinois Department of Transportation (IDOT), in cooperation with the Federal Railroad Administration (FRA) is initiating the information-gathering phase of the National Environmental Policy Act (NEPA) documents being prepared for the proposed improvements included in the Canadian Pacific Railway (CP) Wadsworth Bridge Replacement. Because the project may affect your area of expertise, your facilities, or your activities or programs, we are seeking your comments on this project.

This project, which is located in the Chicago to Milwaukee corridor, will encompass the final design and construction of two bridges at mileposts 46.78 and 47.27 of the CP Chicago & Milwaukee (C&M) subdivision. The bridges are located on the north and south sides of CP's intersection with Russell Road near Wadsworth, IL, over drainage ditches that feed into the nearby Des Plaines River. The attached project map shows the location of the proposed bridge replacements.

The existing bridges at these two locations need replacement to meet the reliability and speed needs of existing and future passenger rail service in the Chicago to Milwaukee corridor. Without replacement of these bridges, speed restrictions on passenger rail traffic may be imposed due to the deteriorating conditions of the bridges. These speed restrictions will adversely affect the 14 daily passenger trains that travel between Chicago and Milwaukee on Amtrak's Hiawatha, and the two daily Amtrak Empire Builder trains that travel between Chicago and Seattle/Portland. In addition, replacement of the bridges will also allow for higher train speeds as part of the proposed high-speed rail on the Chicago-Milwaukee-Twin Cities route.

As part of the NEPA process, the environmental effects of any federal undertaking are analyzed under one of three NEPA classifications. The replacements of the CP Wadsworth bridges are being analyzed under the classification of a 'Categorical Exclusion'. As part of the guidance for maintaining NEPA compliance issued by the Federal Railroad Administration in 2009, the FRA listed the 'replacement of an existing railroad bridge that does not require a significant amount of right-of-way' as one of thirteen proposal types that qualify for a Categorical Exclusion

determination. A Categorical Exclusion states that the actions related to a federally funded project are determined to have no significant impact on the surrounding environment.

The comments and material you supply will be used to determine if the proposed improvements may have impacts that warrant further consideration. Your comments will be incorporated into the environmental planning process and environmental documents as appropriate. Because this effort is part of an FRA grant application, we are operating under an accelerated schedule and would appreciate comments by May 18, 2010.

A draft of the Categorical Exclusion will be submitted with our FRA grant application, due on May 19th, and we can send you a copy for your review and comment at the time of the FRA grant application submittal. Please let us know if you would like a copy of the draft Categorical Exclusion for your review.

If you have any questions about the project, please do not hesitate to contact me at (312) 793-4222, or by email at george.weber@Illinois.gov.

The Illinois Department of Transportation thanks you in advance for your prompt review and responses to our request for comments.

Sincerely,

George Weber
Bureau of Railroads, Bureau Chief

Enclosures:
Map of Project Limits

cc: Wendy Messenger, Federal Railroad Administration
Walter Zyznieuski, Illinois Department of Transportation
Phil Pasterak, Parsons Brinckerhoff

May 13, 2010

George Weber
Chief, Bureau of Railroads
Division of Public and Intermodal Transportation
Illinois Department of Transportation
100 W. Randolph Street, Suite 6-600
Chicago, IL 60601

Dear Mr. Weber:

This in response to your letter dated May 11, 2010, with which you provided information regarding a proposed project to reconstruct two bridges that carry the Canadian Pacific Railway's (CP) tracks over drainage ditches on the north and south sides of the Russell Road highway-rail grade crossing (**AAR/DOT #388 063D, railroad milepost 47.09A**), located near Wadsworth, Lake County. With the letter you provided this office with an opportunity to provide comments for the Illinois Department of Transportation's (IDOT) information gathering phase of the National Environmental Policy Act (NEPA) documents being prepared for the proposed improvements.

Following a review of the information you provided, as well as our files, Staff of the Illinois Commerce Commission (Staff) has no comments to offer for this project.

Thank you for the opportunity to comment on IDOT's information gathering phase of the NEPA documents being prepared for the project to reconstruct two bridges that carry the Canadian Pacific Railway's (CP) tracks over drainage ditches on the north and south sides of the Russell Road highway-rail grade crossing, located near Wadsworth, Lake County. If you have any questions, or need additional information, please contact John Blair, Assistant Rail Safety Program Administrator, at (217) 785-8421 or jblair@icc.illinois.gov, or me at (217) 557-1285 or mstead@icc.illinois.gov.

Very truly yours,

Michael E. Stead
Rail Safety Program Administrator

cc: Phil Pasterak, Parsons Brinckerhoff

From: Schuerman, DiAnne
Sent: Thursday, May 13, 2010 2:47 PM
To: Garcia, Mike R
Cc: Weber, George E; McClarty, Charles S; Elzinga, Sherrie
Subject: Railroad Projects/EPA Sign-off Letters

Dear Mike,
I am in receipt of your upcoming RR projects for Union Pacific Mainline 2 from Joliet to Elmwood (EPA # 2010-085) and the Canadian Pacific Railway Bridge Replacements (EPA # 2010-086).
In an effort to have these projects reviewed in a timely manner, please continue to submit them directly to the Deputy Director's Office as in the past, (ex: FY2010 Rail Improvement: Zion, Trumpet Corporate Park/Union Pacific EPA # 2009-203).
Please submit your future requests for review to:

Illinois Environmental Protection Agency, Deputy Director's Office/MC #1,
PO Box 19276, Springfield, Illinois 62794-9276, ATTN: DiAnne Schuerman.

You will be receiving our clearance response for the above mentioned projects in the near future.
Thank you for your cooperation in routing. If you have questions, please do not hesitate to contact me.
DiAnne Schuerman
Administrative Assistant II
Illinois Environmental Protection Agency
Office of the Deputy Director, MC # 1
1021 North Grand Avenue East
P. O. Box 19276
Springfield, IL 62794-9276
Ph: 217-782-0547
Fax: 217-782-9039

From: Tom Hahn [mailto:thahn@LCFPD.org]
Sent: Thursday, May 13, 2010 1:27 PM
To: Weber, George E
Cc: Anderson, Jim; Mike Fenelon; Mike Tully
Subject: Categorical Exclusion, Canadian Pacific Railway BridgeReplacements Mile posts 46.78 and 47.27

Mr. Weber,

I am in receipt of your letter dated May 11, 2010 regarding the proposed improvements to the Wadsworth Bridge. I have asked my staff to prepare a letter to you regarding the proposal and any additional information we might need for the preliminary evaluation. However, because of workload issues, it is doubtful that my staff will have the letter to you prior to your suggested date of May 18, 2010.

Thank you.

Tom Hahn
Executive Director
Lake County Forest Preserve District.

Thomas Hahn
Executive Director
Lake County Forest Preserve District
2000 North Milwaukee Avenue
Libertyville, Illinois 60048
thahn@lcfpd.org
www.LCFPD.org
Find us on Facebook | Follow us on Twitter |Watch us on YouTube | Share photos on flickr

Please consider the environment before printing this email. Note our new email addresses are **@LCFPD.org**

----- Original Message -----
From: Scot.M.Striffler@USCG.MIL <Scot.M.Striffler@USCG.MIL>
To: Weber, George E
Cc: Salik, Douglas LT <Douglas.Salik@USCG.MIL>; Stanifer, William <William.B.Stanifer@USCG.MIL>; Soule, Lee <Lee.D.Soule@USCG.MIL>
Sent: Fri May 14 12:27:49 2010
Subject: Canadian Pacific Railway Bridge Replacements - Wadsworth, IL

Mr. Weber,

I am responding to your letter dated May 11, 2010, addressed to LT Douglas Salik at Coast Guard Marine Safety Unit Chicago, regarding the National Environmental Policy Act (NEPA) scoping for the proposed replacement of Canadian Pacific Railway bridges at Mile Posts 46.78 and 47.27, respectively, in Wadsworth, IL. This message addresses Coast Guard Bridge Program jurisdiction and potential federal bridge permit requirements.

The proposed projects do not cross waterways where the Coast Guard Bridge Administration Program exercises jurisdiction. Accordingly, a federal Coast Guard Bridge Permit is not required, and we would not have any coordination in the NEPA processes for these projects.

Though a federal Coast Guard Bridge Permit is not required, Canadian Pacific Railway must comply with the requirements of all other federal, state, or local agencies.

Please contact me at (216) 902-6087 if you have any questions or concerns regarding this matter. Thank you.

Sincrely,

Scot Striffler
Bridge Program Manager
Ninth Coast Guard District
(216) 902-6087
Fax: (216) 902-6088
Scot.M.Striffler@uscg.mil

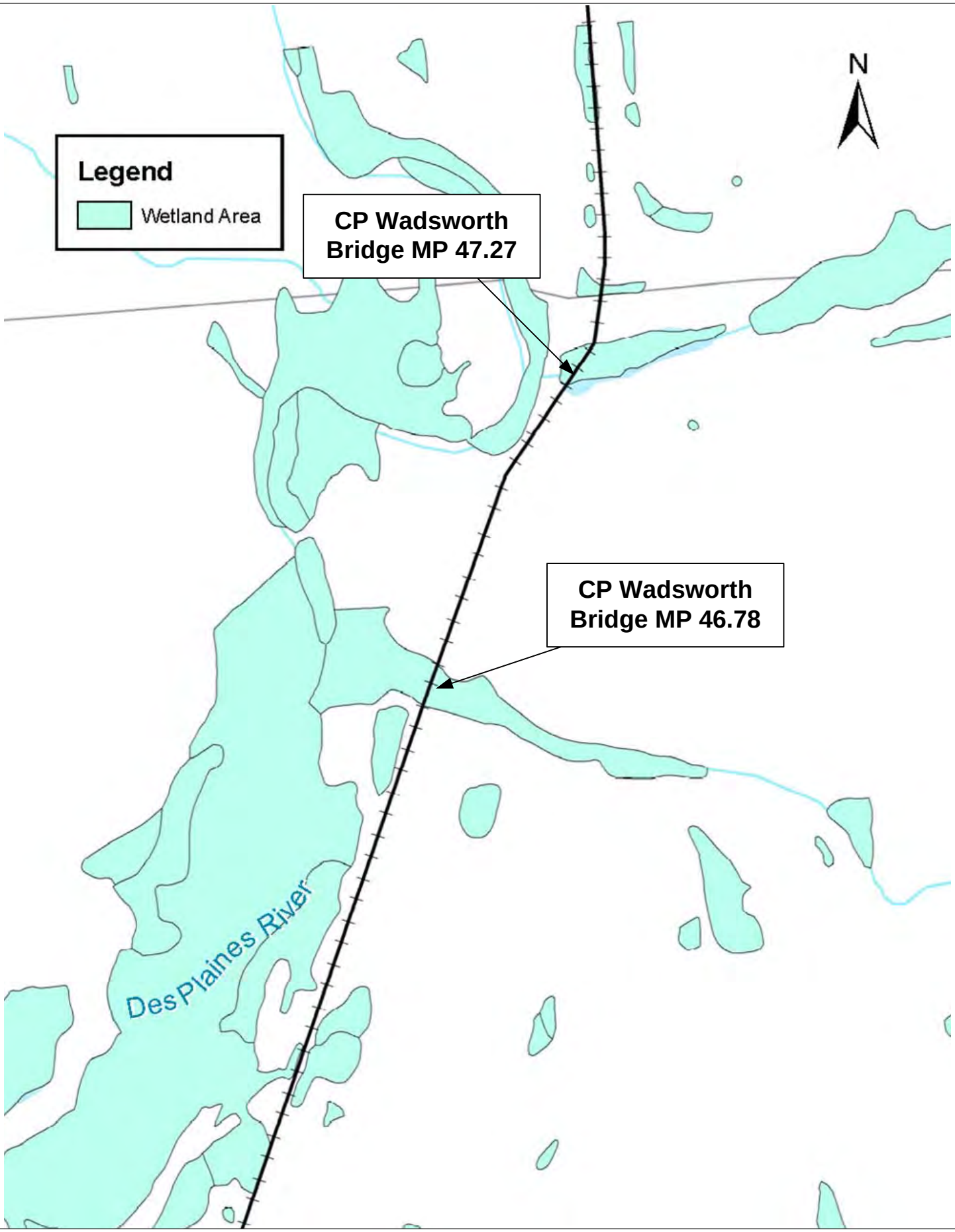

CP Wadsworth Bridge Replacements
Designated Wetland Areas
Figure L.1

DEPARTMENT OF THE ARMY
CHICAGO DISTRICT, CORPS OF ENGINEERS
111 NORTH CANAL STREET
CHICAGO, ILLINOIS 60606-7206

REPLY TO
ATTENTION OF:

Technical Services Division
Regulatory Branch
LRC-2008-00615

March 9, 2009

<SENT VIA FACSIMILE>

SUBJECT: Soil Erosion and Sediment Control Plans for Replacement of Span Bridge over Newport Drainage Ditch Located South of Russell Road, Near Zion, Lake County, Illinois

Danny Wong
Canadian Pacific Railway
11306 West Franklin Avenue
Franklin Park, IL 60131

Dear Mr. Wong

The U.S. Army Corps of Engineers, Chicago District, has received your notification for authorization under the Regional Permit Program and has assigned LRC-2008-00615 as its reference number. This number will be used on all future correspondence regarding your notification.

Following a preliminary evaluation of your project, the District has determined that your soil erosion and sediment control plans must be reviewed by the Lake County Stormwater Management Commission (SMC) listed below.

Lake County SMC
Attn: Joe Hmieleski
333-B Peterson Road
Libertyville, IL 60048
(847) 918-5260

Please contact the SMC as soon as possible to obtain information on the application process required to review your plans. Send all correspondence regarding SESC measures and a completed Watershed Development Permit Application directly to SMC. The submission of your plans to this agency and a determination that these meet technical standards is required

You are advised not to undertake any activity in connection with the proposed activity in any water of the United States until authorization under an IP has been obtained. Any work related to the proposed project undertaken on upland is done so at your own risk and will not prejudice the processing of your notification.

Please visit our website at http://www.lrc.usace.army.mil/co-r/sesc.htm for further information regarding the SESC program. If you have any questions, please contact Kathy Chernich of my staff by telephone at 312-846-5531, or email at Kathy.G.Chernich@usace.army.mil.

Sincerely,

Leesa A. Beal
Chief, East Section
Regulatory Branch

Copy Furnished:

Lake County SMC (Joe Hmieleski)
Lake County PBD (Dan Krill)
AECOM (Kevin Kasprzak)

LAKE COUNTY

STORMWATER MANAGEMENT COMMISSION

April 6, 2009

Mr. Danny Wong
Engineering Services – Chicago Service Area
Canadian Pacific Railway
11306 Franklin Avenue
Franklin Park, IL 60131

Subject: Watershed Development Permit Application #C08-69-141
Milepost 46.78 Bridge Replacement over the Newport Drainage Ditch

Dear Mr. Wong:

Thank you for the submittal provided on your behalf by AECOM and received by the Lake County Stormwater Management Commission (SMC) March 18, 2009 for the proposed railroad bridge replacement over the Newport Drainage Ditch. We have completed our review; please amend your permit application to address the following concerns:

1) SMC concurs that the provided SE/SC estimated cost of $23,000 is adequate for this project. Please provide the check with the next submittal.
2) Please provide a complete final plan set, signed by a PE, for permit issuance.
3) The proposed access road is partially located within Regulatory Floodplain so every effort should be made to keep the road at grade. SMC understands that all disturbed areas will be restored to original grades when work is complete. No response is required for this comment.

We would like to be of assistance. Do not hesitate to contact me via email at rgardiner@lakecountyil.gov or via telephone at (847)918-7690 or if you have questions or comments.

Sincerely,

LAKE COUNTY STORMWATER MANAGEMENT COMMISSION

Robert D. Gardiner

Robert D. Gardiner, P.E., CFM
Permit Engineer

C: Brian Schaffer – AECOM
Kevin Kasprzak – AECOM
Kathy Chernich – U.S. Army Corps of Engineers (#LRC-2008-00615)
Eric Steffan – Lake County Planning, Building & Development

Joint Permit Application

Proposed Bridge Replacement at Milepost 46.78,
C&M Subdivision, Lake County, Illinois

STS Project No. 200800964

STS | AECOM

Canadian Pacific Railway
Chicago Service Area
11306 Franklin Avenue
Franklin Park, IL 60131

November 14, 2008

Randy Gardiner
Lake County SMC
333-B Peterson Rd.
LIbertyville, IL 60048-1085

RE: Waterway Construction Permit Application for Proposed Bridge Replacement of Canadian Pacific Railway Bridge Spanning Newport Drainage Ditch in Unincorporated Lake County, Illinois.

Dear Randy:

Enclosed is a permit application for replacement of the railroad bridge located at milepost 46.78 in the C&M Subdivision, located in Unincorporated Lake County, Illinois. This application package includes required descriptions, drawings, hydraulic analysis, and wetland information. This package contains the WDO Permit Application and all necessary supporting drawings, reports, and delineations.

If you have any questions regarding this permit application, please contact us at 847 279-2500.

Sincerely,

Brian K Schaffer, EIT

Assistant Project Engineer

Lee Austin, PE

Principle Engineer

CC: Kevin Kasprzak, AECOM

Danny Wong, CPR

Table of Contents

1.0 Project Background 1
2.0 Project Description..... 1
3.0 Hydraulic Study 1
4.0 Regulatory Evaluation 2
Impacts to Wetlands/Waters of the U.S. 2
5.0 Alternatives, Avoidance, and Minimization Analysis 2
Alternatives 2
Avoidance and Minimization 2
6.0 Best Management Practices..... 3

Figure 1 – Project Location Map
Figure 2 – Project and Wetland Locations

Appendices

Appendix A	Photographs
Appendix B	Proposed Bridge Plan 11” X 17” sheets
Appendix C	Wetland Delineation Report
Appendix D	Hydraulic Study
Appendix E	Ecological Compliance Assessment Tool (ECOCAT) output report.

Attachments

Attachment 1.	Drawings of Proposed Bridge Design
Attachment 2.	Soil Erosion and Sediment Control Design

SECTION 404/401 OF THE CLEAN WATER ACT
IDNR FLOODPLAIN CONSTRUCTION
LAKE COUNTY SMC WDO
PERMIT APPLICATION
FOR PROPOSED BRIDGE REPLACEMENT
AT MILEPOST 46.78 IN C&M SUBDIVISION
LAKE COUNTY, ILLINOIS

1.0 Project Background

Canadian Pacific Railway (CP) proposes to replace an existing bridge at milepost 46.78 in northern Lake County, Illinois (in the NW ¼ of NW ¼ of Section 11, Township 46N, Range 11E). The existing structure consists of a concrete ballast deck bridge that is nearing its maximum design life. The bridge spans Newport Drainage Ditch and is located within the Des Plaines River floodplain. A project location map is provided as Figure 1. Photographs of the project site are provided in Appendix A. The bridge is located at Latitude 42.4859, Longitude -87.9223.

We believe that this project meets the conditions associated with USACE Regional Permit (RP3), Category 1, and that floodplain permitting will be delegated by IDNR to Lake County SMC. A copy of this application package will be sent to the USACE for confirmation and a request for coverage under RP3, to IDNR Office of Water Resources for confirmation, and to Lake County SMC for Watershed Development Ordinance Permitting..

2.0 Project Description

The proposed project involves replacing the existing bridge on a non-public waterway. The proposed bridge will be constructed along the existing alignment in the same location as the existing bridge. The proposed bridge plans are included as an attachment and 11”X 17” versions are provided as Appendix B. The Newport Drainage Ditch watershed area is approximately 7.82 square miles upstream of the project location. No dredge or fill is anticipated, excepting the removal of an existing center pier.

3.0 Hydraulic Study

CP contracted AECOM to perform a hydraulic analysis of the Newport Drainage ditch in the vicinity of the project site to identify the hydraulic impact of the proposed replacement of the existing bridge. We analyzed the structure using the Hydraulic Engineering Center – River Analysis System (HEC-RAS) for the proposed conditions. Based on the Federal Emergency Management Agency’s (FEMA) Flood Insurance Study (FIS) completed in 1997, and the Newport Drainage Ditch Hydrologic and Hydraulic Modeling and Floodplain

Mapping study performed by MWH for SMC in 2003, the flood levels at this bridge are dependent on the flood levels in the Des Plaines River located approximately 850 feet downstream. The Hydraulic Study is provided as Appendix D.

4.0 Regulatory Evaluation

Impacts to Wetlands/Waters of the U.S.

This project will have incidental impacts to waters of the U.S. due to construction activities. An existing pier will be removed and the existing abutments will be replaced. Based on AECOM's observation of the project site and the use of Corps of Engineers (COE) wetland delineation methodology, it is our opinion that the project site meets the technical criteria necessary to be considered "waters of the US". The wetland delineation report is included as Appendix C. The proposed project impacts less than 0.1 acres of waters of the U.S. and no mitigation is proposed. An Ecological Compliance Assessment Tool (ECOCAT) report was obtained via the internet for the project location that indicated that no record of Illinois State listed threatened or endangered species, Natural Area Inventory sites, Nature Preserves, or Land and Water reserves are located in the vicinity of the project location. The ECOCAT output is provided as Appendix E.

5.0 Alternatives, Avoidance, and Minimization Analysis

Alternatives

There are no plausible alternatives to this project as the bridge needs to be replaced to maintain safe train operation.

Avoidance and Minimization

There is no way to avoid impacts and maintain safe train operation. Replacing the bridge will have incidental impacts on waters of the U.S., but this impact will be minimized by:

- Performing construction operations from the track and existing embankment as much as possible.
- Using only clean fill material.
- Providing soil erosion and sediment control measures during construction, and performing construction at periods of low flow.
- Properly disposing of all removed structural material.

6.0 Best Management Practices

Silt and construction fencing will be utilized to control sediment transport during construction and will be installed prior to commencing. The fencing will be placed around areas of disturbed soils and along those portions of the bank where runoff could potentially enter the water. Upon completion of construction the disturbed areas will be stabilized using approved materials and re-vegetated using native grasses. The SE/SC plan is provided as Attachment 2.

Contents

1.0 Project Background **2**

2.0 Project Description **2**

3.0 Hydraulic Study **2**

4.0 Regulatory Evaluation **3**

4.1 Impacts to Wetlands/Waters of the U.S. 3

4.2 Impacts Threatened or Endangered Species 3

5.0 Alternatives, Avoidance, and Minimization **4**

5.1 Alternatives 4

5.2 Avoidance and Minimization 4

6.0 Best Management Practices **4**

List of Appendices

Appendix A ..... Photographs of Project Area

Appendix B ..... Drawings of Proposed Bridge

Appendix C ..... Wetland Delineation Report

Appendix D ..... Hydraulic Study

Appendix E ..... ECOCAT Report

Appendix F ..... U.S. Fish and Wildlife Threatened and Endangered Species List and Species Fact Sheets

Appendix G ..... Soil Erosion and Sediment Control Plan Sheets

1.0 Project Background

Canadian Pacific Railway (CP) proposes to replace an existing bridge at milepost 47.27 in northern Lake County, Illinois (in the NW ¼ of NW ¼ of Section 02, Township 46N, and Range 11E). The existing structure consists of a concrete ballast deck bridge that is nearing its maximum design life. The bridge spans an unnamed tributary and is located within the Des Plaines River floodplain. A project location map is provided as Figure 1. Photographs of the project site are provided in Appendix A. The bridge is located at Latitude 42.4927, Longitude -87.9181.

We believe that this project meets the conditions associated with USACE Regional Permit (RP3), Category 1. A copy of this application package will be sent to the USACE for confirmation and a request for coverage under RP3, to IDNR Office of Water Resources for confirmation, to Lake County SMC for erosion control review, and to Lake County for Watershed Development Ordinance Permitting.

2.0 Project Description

The proposed project involves replacing the existing bridge on a non-public waterway. The proposed bridge will be constructed along the existing alignment in the same location as the existing bridge. The proposed bridge plans are included as an attachment and 11"X 17" versions are provided as Appendix B. The tributary watershed area is approximately 5 square miles at the project location. Minimal amounts of dredge and fill are anticipated in association with replacing existing piers and abutments.

3.0 Hydraulic Study

AECOM completed a hydraulic analysis of the unnamed tributary spanned by the existing bridge to assess the hydraulic impact of the proposed replacement. AECOM analyzed the structure using the Hydraulic Engineering Center – River Analysis System (HEC-RAS) to assess the existing and proposed conditions. The Federal Emergency Management Agency's (FEMA) Flood Insurance Study (FIS) completed in 1997 was used as a source of input data for model boundary conditions and downstream water levels for various flow conditions. The assessment indicates that water surface elevations at this bridge are highly dependent on the flood levels in the Des Plaines River located approximately 850 feet downstream. The proposed bridge (Appendix B) is designed to have a greater opening area than the

existing bridge by reducing the number of abutments and raising the low chord elevation. The Hydraulic Study with detailed model output data is provided as Appendix D.

4.0 Regulatory Evaluation

4.1 Impacts to Wetlands/Waters of the U.S.

This project will have incidental impacts to waters of the U.S. due to construction activities. Existing piers will be removed and the existing abutments will be replaced. Based on AECOM's observation of the project site and the use of Corps of Engineers (COE) wetland delineation methodology, it is our opinion that the project site meets the technical criteria necessary to be considered "waters of the US". The wetland delineation report is included as Appendix C.

The proposed construction is expected to be completed from the existing track with all rail traffic stopped for the duration of construction. If this is not possible, access will be negotiated with the property owner to the northwest of the project location. This access is not expected to impact any existing wetland areas.

The proposed project impacts less than 0.1 acres of wetlands and waters of the U.S. and no mitigation is proposed.

4.2 Impacts Threatened or Endangered Species

An Ecological Compliance Assessment Tool (ECOCAT) report was obtained for the project location. It indicated that no record of Illinois State listed threatened or endangered species, Natural Area Inventory sites, Nature Preserves, or Land and Water reserves are located in the vicinity of the project location. The ECOCAT output is provided as Appendix E.

A careful review of the U.S. Fish and Wildlife technical assistance website was completed for the project location on October 9, 2009. According to the website, five species are listed as threatened or endangered and may be present in Lake County. These five species are: the Indiana bat, the Piping plover, the Karner Blue butterfly, the Eastern Prairie Fringed orchid, and Pitcher's thistle. Additionally, the Eastern massasauga is a candidate species that may be present in Lake County.

The action area for the proposed project consists of a small stream and rail corridor with no developed riparian area or standing dead trees in the immediate vicinity. We conclude that species and critical habitat are not present. The applicable county list and species data sheets are provided in Appendix F.

5.0 Alternatives, Avoidance, and Minimization

5.1 Alternatives

Alternatives to this project that were considered include installation of culverts to replace existing spans, and partial fill of existing spans. The replacement of bridge spans with culverts produces a crossing with less intense maintenance and inspection requirements that would be less expensive for the railroad in the long term. However, because of soil conditions at this location, installation of culverts would result in unacceptable settlement and is not considered an acceptable alternative. Filling of existing spans is also an attractive alternative due to reduced long-term maintenance costs. It is not an acceptable option at this location due to hydraulic requirements.

5.2 Avoidance and Minimization

There is no way to avoid impacts and maintain safe train operation. Replacing the bridge will have incidental impacts on waters of the U.S., but this impact will be minimized by:

- Performing construction operations from the track and existing embankment as much as possible.
- Using only clean fill material.
- Providing soil erosion and sediment control measures during construction, and performing construction at periods of low flow.
- Properly disposing of all removed structural material.
- Avoidance of wetland areas for construction activities.

6.0 Best Management Practices

Approved soil erosion and sediment control (SE/SC) best management practices (BMPs) will be used during construction. A SE/SC plan developed under supervision of an Illinois Licensed Professional Engineer is attached as Appendix G. These measures include use of temporary cofferdam structures around the abutments during removal and replacement, and measures to control upland erosion on any disturbed soil.

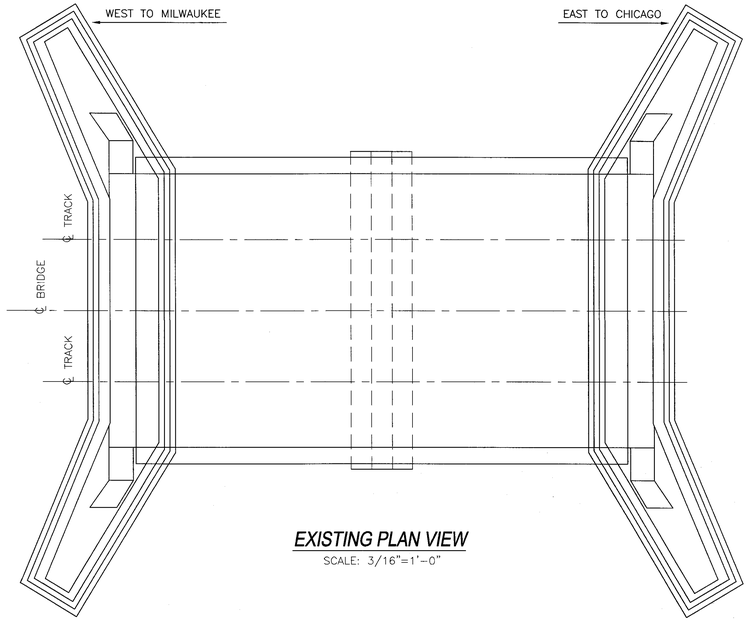

EXISTING PLAN VIEW
SCALE: 3/16"=1'-0"

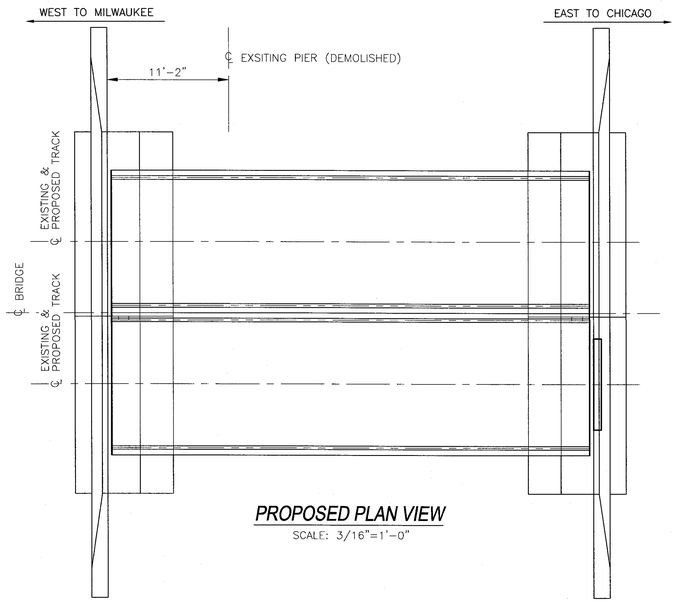

PROPOSED PLAN VIEW
SCALE: 3/16"=1'-0"

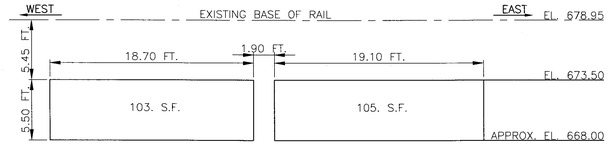

EXISTING BRIDGE OPENING
208. S.F.

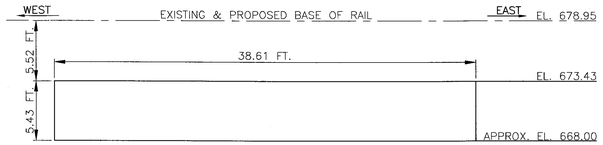

PROPOSED BRIDGE OPENING
210. S.F.

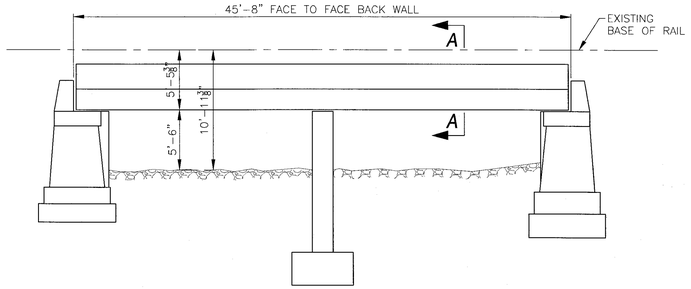

EXISTING ELEVATION
SCALE: 3/16"=1'-0"

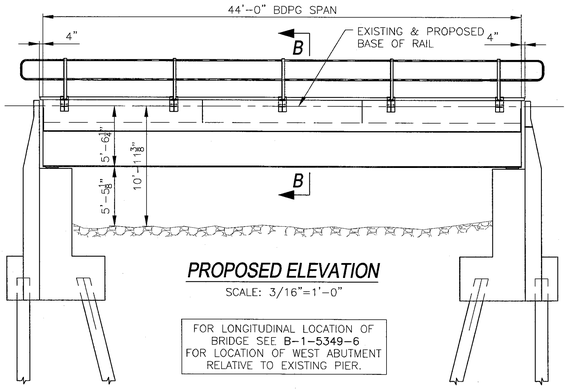

PROPOSED ELEVATION
SCALE: 3/16"=1'-0"

FOR LONGITUDINAL LOCATION OF BRIDGE SEE **B-1-5349-6**
FOR LOCATION OF WEST ABUTMENT RELATIVE TO EXISTING PIER.

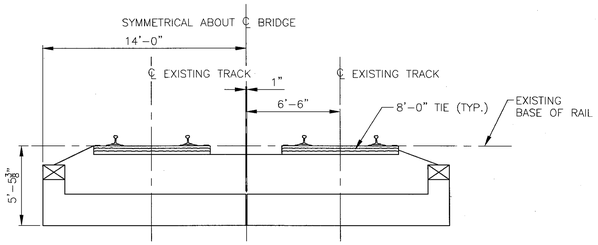

SECTION A-A
SCALE: 1/4"=1'-0"

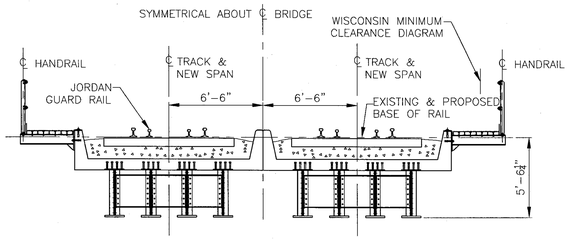

SECTION B-B
SCALE: 1/4"=1'-0"

LIST OF DRAWINGS:

DRAWING NO.:	DESCRIPTION:
B-1-5349-1	RECONSTRUCTION OF BRIDGE GENERAL ARRANGEMENT
B-1-5349-2	44'0" STEEL BDPG SPAN STEEL WORK
B-1-5349-3	44'0" STEEL BDPG SPAN DECK SLAB
B-1-5349-4	WALKWAY DETAILS SHEET 1 OF 2
B-1-5349-5	WALKWAY DETAILS SHEET 2 OF 2
B-1-5349-6	BRIDGE RECONSTRUCTION WEST ABUTMENT
B-1-5349-7	BRIDGE RECONSTRUCTION EAST ABUTMENT AND CONSTRUCTION DETAILS
B-14-59 & 60	E60 TREATED TIMBER TRESTLE

REFERENCE DOCUMENTS:

DRAWING NO.:	DESCRIPTION:	
A 29A, P 11, 5288-0	REPORT OF MASONRY, AS BUILT	1893
A 127B, P 49, C2851	REPLACE USING 19FT. SPANS	1908
----	GEOTECHNICAL ENGINEERING ANALYSIS BY STS/AECOM	2008
----	HYDRAULIC EVALUATION BY STS/AECOM	2008

No.	DATE	REVISION	BY
	Oct.21, 08	SIGNED AND ISSUED	

CANADIAN PACIFIC
Engineering Services - Structures & Projects
STRUCTURES PLANNING & DESIGN
CALGARY, ALBERTA

BR. 46.78 C&M SUB. CHICAGO SERVICE AREA

BRIDGE RECONSTRUCTION GENERAL ARRANGEMENT

DWG. BY: SG CHK BY: JAW
OFFICE FILE: XB-C&M-46.78
SCALE: AS SHOWN
DATE: OCT 21, 2008
ENGINEER
MANAGER, STRUCTURES PLANNING & DESIGN
PLAN No. B-1-5349-1

EXHIBIT M.1

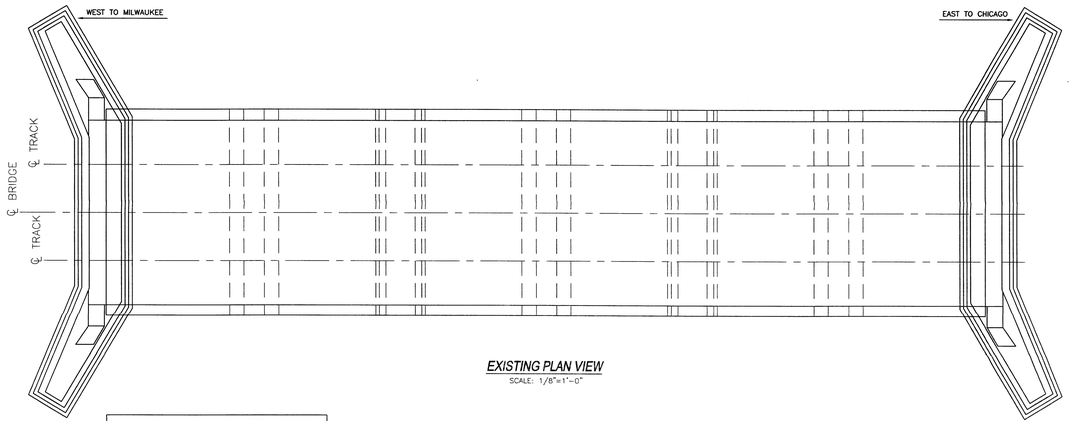

EXISTING PLAN VIEW
SCALE: 1/8"=1'-0"

ALIGNMENT: 1° CURVE LEFT, APPROX.
GRADE: 0.17% RISING WEST

NOTE: WATER LEVEL SHOWN IS THE 100 YEAR RECURRENCE WITH BACKUP FROM THE DES PLAINES RIVER

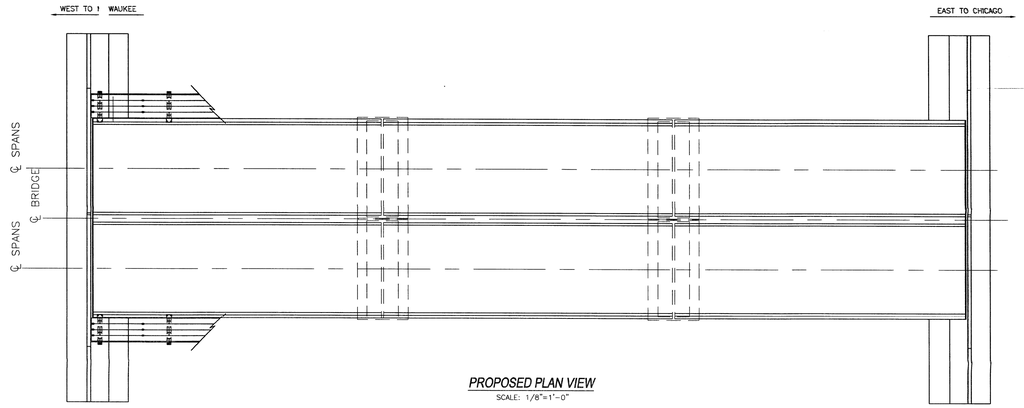

PROPOSED PLAN VIEW
SCALE: 1/8"=1'-0"

ALIGNMENT: 1° CURVE LEFT, APPROX.
GRADE: 0.17% RISING WEST

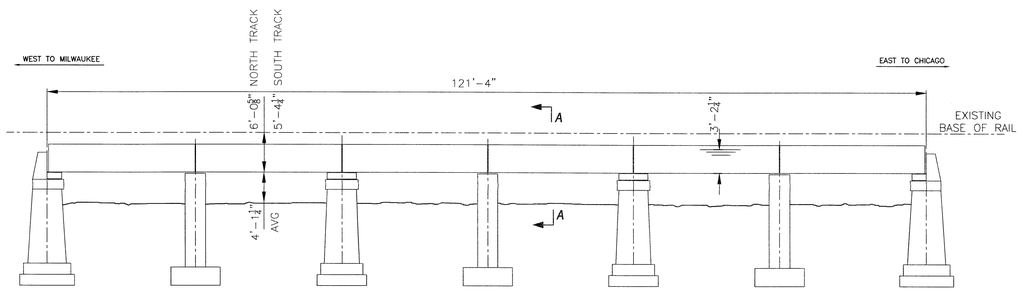

EXISTING ELEVATION
SCALE: 1/8"=1'-0"

EXISTING WATERWAY.
OPENING 416. SQ.FT.

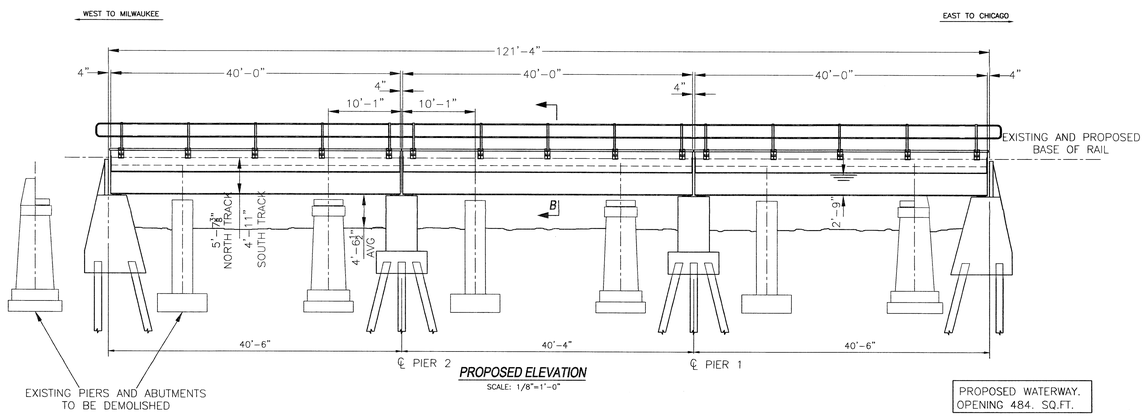

PROPOSED ELEVATION
SCALE: 1/8"=1'-0"

PROPOSED WATERWAY.
OPENING 484. SQ.FT.

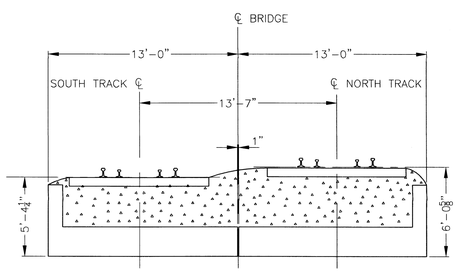

SECTION A-A
SCALE: 1/4"=1'-0"

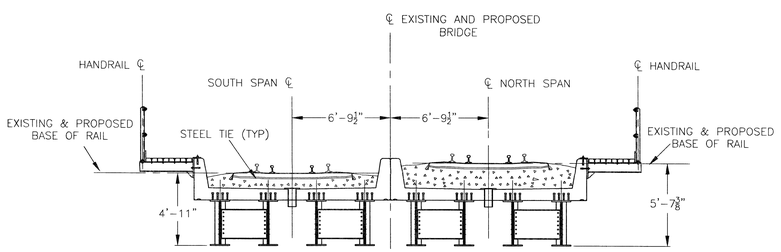

SECTION B-B
SCALE: 1/4"=1'-0"

LIST OF PLANS:

DRAWING NO.:	DESCRIPTION:
B-1-5392-1	BRIDGE RECONSTRUCTION GENERAL ARRANGEMENT
B-1-5392-2	40'-0" BDPG SPAN STEELWORK DETAILS
B-1-5392-3	40'-0" BDPG SPAN CONCRETE DECK
B-1-5392-4	WALKWAY DETAILS
B-1-5392-5	WALKWAY DETAILS
B-1-5392-6	BRIDGE RECONSTRUCTION EAST ABUTMENT
B-1-5392-7	BRIDGE RECONSTRUCTION WEST ABUTMENT
B-1-5392-8	BRIDGE RECONSTRUCTION PIER

REFERENCE PLANS:

DRAWING NO.:	DESCRIPTION:	
ALBUM 29A P12	PLAN OF MASONARY	1892
ALBUM 148B P12	6-20' SPANS DOUBLE TRACK REINF. CONC. TRESTLE	1909
ALBUM 119 P33	CONCRETE REPAIRS	1966

No.	DATE	REVISION	BY
	DEC 7/09	SIGNED AND ISSUED	

CANADIAN PACIFIC
Engineering Services - Structures & Projects
STRUCTURES PLANNING & DESIGN
CALGARY, ALBERTA

BR.47.27 C&M SUB. CHICAGO SERVICE AREA

BRIDGE RECONSTRUCTION GENERAL ARRANGEMENT

DWG. BY: BB CHK BY: JAW
OFFICE FILE: XB-C&M-47.27
SCALE: AS SHOWN
DATE: DEC 7, 2009
PLAN No. B-1-5392-1
ENGINEER
MANAGER STRUCTURES PLANNING & DESIGN

EXHIBIT M.1

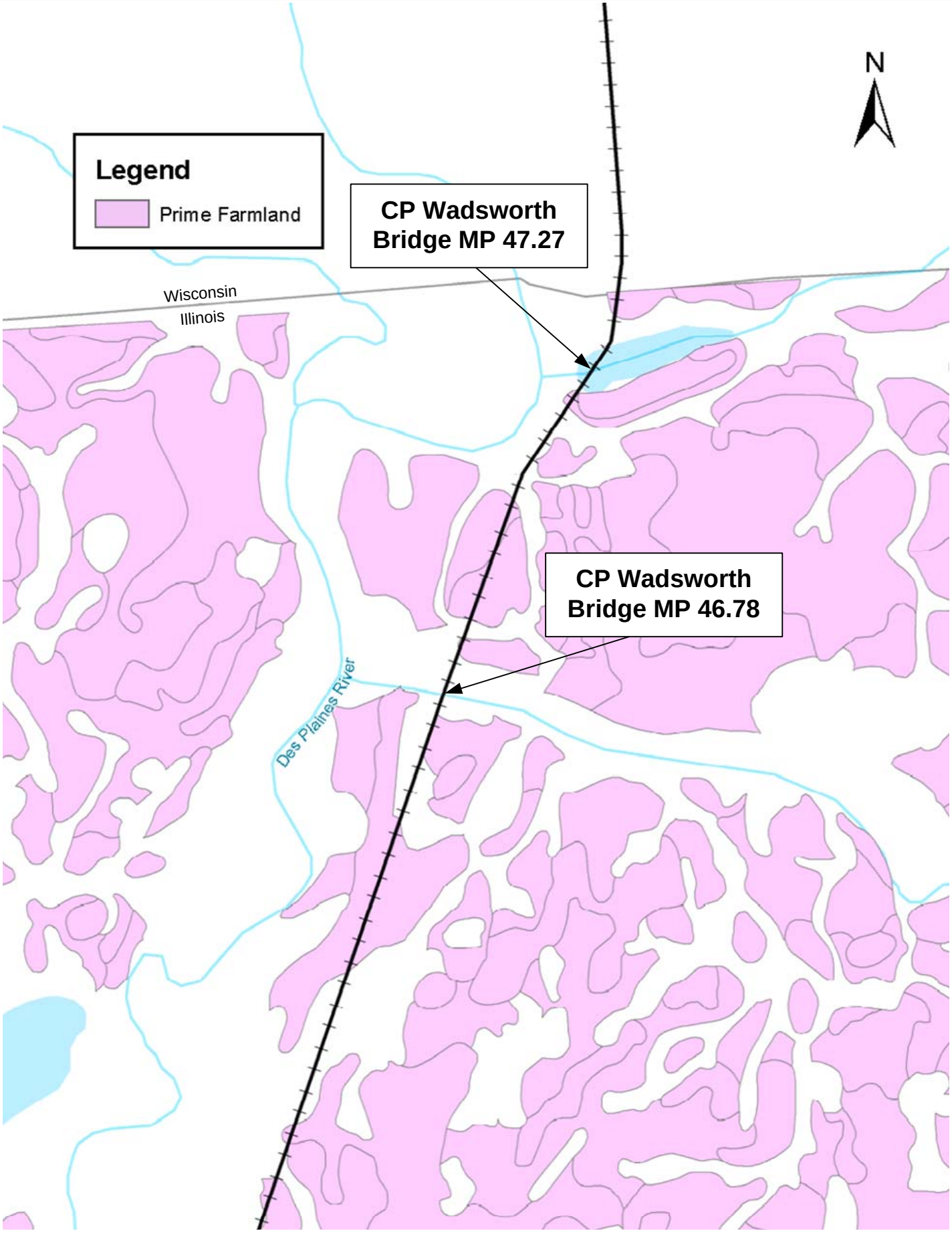

CP Wadsworth Bridge Replacements
Prime Farmland
Figure Q.1

Illinois Department of
Natural Resources
One Natural Resources Way Springfield, Illinois 62702-1271
http://dnr.state.il.us

Pat Quinn, Governor
Marc Miller, Director

May 05, 2010

Daniel Schulte
Quandel Consultants, LLC
161 N. Clark St.
Suite 2060
Chicago, IL 60601

Re: CP Wadsworth, IL Bridge Replacement MP 46.78
Project Number(s): 1009037
County: Lake

Dear Applicant:

This letter is in reference to the project you recently submitted for consultation. The natural resource review provided by EcoCAT identified protected resources that may be in the vicinity of the proposed action. The Department has evaluated this information and concluded that adverse effects are unlikely. Therefore, consultation under 17 Ill. Adm. Code Part 1075 is terminated.

This consultation is valid for two years unless new information becomes available that was not previously considered; the proposed action is modified; or additional species, essential habitat, or Natural Areas are identified in the vicinity. If the project has not been implemented within two years of the date of this letter, or any of the above listed conditions develop, a new consultation is necessary.

The natural resource review reflects the information existing in the Illinois Natural Heritage Database at the time of the project submittal, and should not be regarded as a final statement on the site being considered, nor should it be a substitute for detailed site surveys or field surveys required for environmental assessments. If additional protected resources are encountered during the project's implementation, you must comply with the applicable statutes and regulations. Also, note that termination does not imply IDNR's authorization or endorsement of the proposed action.

Please contact me if you have questions regarding this review.

Steve Hamer
Division of Ecosystems and Environment
217-785-5500

Printed on recycled and recyclable paper

EXHIBIT R.1

Exhibit E.2.1

IDOT-CP Agreement

State of Illinois/Department of Transportation

AGREEMENT FOR REPLACEMENT OF bridge spans and abutments of two railway bridges at MP 46.78 and 47.27 C&M Subdivision with reinforced concrete ballasted deck in Lake County, Illinois

PROJECT I.D. _____

This Agreement, by and between the State of Illinois, Department of Transportation, hereinafter referred to as the "STATE" and Soo Line Railroad Company, hereinafter referred to as the "COMPANY", provides for the performance of work described herein by the COMPANY on the above named project.

WITNESSETH

WHEREAS, the STATE desires to add reliability for passenger and freight services on the line owned by COMPANY between Milwaukee, Wisconsin and Chicago, Illinois; and

WHEREAS, The COMPANY has identified completion of this project as one of several projects that are necessary prior to the implementation of additional passenger rail frequencies on this line; and

WHEREAS, the STATE has received funding from the Federal Railroad Administration to replace two railroad bridges on the COMPANY's line at approximately Milepost 46.78 and Milepost 47.27 of the C&M Subdivision and

WHEREAS, the STATE desires to finance the track construction with federal aid funds as provided under Section **x.x**, Illinois Statutes; and deems it more feasible and advantageous to have such work performed by the COMPANY directly and without bids pursuant to Section **x.x**, Illinois Statutes.

NOW, THEREFORE, in consideration of the premises and of their mutual and dependent agreements hereinafter set forth, the parties hereto hereby agree as follows:

1. STANDARD PROVISIONS. The work described below shall be performed in accordance with the provisions contained herein and the "Standard Provisions" of the State of Illinois , dated _____, Exhibit "A", attached hereto and made a part of this Agreement, except for Item 7.

2. WORK TO BE PERFORMED BY THE COMPANY.

(a) (i) Along the COMPANY's C&M Subdivision Mainline at approximately Milepost 46.78 in Lake County, Illinois to replace an existing bridge with a new reinforced concrete ballasted deck bridge and new abutments; (ii) at Milepost 47.27 in Lake County, Illinois, replace a 125-foot bridge with a new reinforced concrete ballasted deck bridge and new abutments.

DRAFT

(b) Such work is further described in the agreement summary, Exhibit “B”, detailed estimates, Exhibit "C", locations shown in Exhibit “D” and the benefits of the project, Exhibit “E”, which are attached hereto and made a part hereof. The Agreement cost of such work based on the detailed estimate is ($7,423,152.00 US).

(c) The parties acknowledge that the work under this agreement will be phased so as to match the availability of funds from the FRA. At this time, STATE has indicated it will submit an application to the FRA, for a total of seven million, four hundred twenty three thousand, one hundred fifty two dollars ($7,423,152.00 US) to pay for the work contemplated. The work cannot begin until the funding from the FRA is obligated. Any and all costs in excess of the estimate will be borne solely by the COMPANY.

3. DESIGN. (a) The installation of all new track structures and modification of any components shall be in accordance with the COMPANY’s Standards.

4. CONSTRUCTION. (a) The COMPANY with its own forces will make these track structure modifications in accordance with the plans and specifications therefore and the standard and accepted practices for such work.

All work under this Agreement, as set forth herein and in the exhibits and attachments hereto and made a part hereof, shall be performed under normal COMPANY practices and the applicable requirements of the United States Department of Transportation.

5. OPERATION AND MAINTENANCE.

(a) Upon completion of the installation of the two bridges and their acceptance by the STATE, the COMPANY will operate and maintain them under the rules and regulations of the Federal Railroad Administration.

(b) The COMPANY acknowledges the proposed improvements are being accomplished to improve the reliability of passenger rail service.

6. APPORTIONMENT OF COSTS.

(a) The COMPANY agrees to pay the STATE the amount of three million, seven hundred eleven thousand, five hundred seventy six dollars ($3,711,576.00 US) prior to commencing the work identified in Exhibit C.

(b) The STATE will reimburse the COMPANY for the work performed in Exhibit C up to an amount of seven million, four hundred twenty three thousand, one hundred fifty two dollars ($7,423,152.00 US). Progress payments will be considered by the parties as a means to achieve this result.

(c) Any and all costs in excess of seven million, four hundred twenty three thousand, one hundred fifty two dollars ($7,423,152.00 US)will be borne solely by the COMPANY. If, upon completion of the work, the actual total cost of the work identified in Exhibit C amounts to less than seven million, four hundred twenty three thousand, one hundred fifty two dollars ($7,423,152.00 US), the STATE will reimburse the

DRAFT

COMPANY for 50% of the difference between the actual total cost and seven million, four hundred twenty three thousand, one hundred fifty two dollars ($7,423,152.00 US)

The execution of this Agreement by the STATE shall not relieve the COMPANY from compliance with the applicable Federal and State laws, Illinois Administrative Codes, and local laws or ordinances which may affect the performance of the work covered herein, and shall not be construed to supersede any other governmental agency requirements for plan approval or authority to undertake the work.

7. INVOICE AND BILLS. The COMPANY will submit all invoices and bills for reimbursement, to the Illinois Department of Transportation, Bureau of Railroads, 100 West Randolph, Chicago, Illinois 60601-3229. The State Project I.D. number will be included on all invoices and bills. The Final Bill is to be submitted within one year of the STATE's acceptance of the COMPANY's work in accordance with Federal Law. If the Final Bill is not received by that date, the last detailed progressive bill will be considered to be the Final Bill.

IN WITNESS WHEREOF, the parties hereto have caused this Agreement to be executed by their proper officers and representatives on the day and the year below written.

SOO LINE RAILROAD COMPANY

By_____
Signature Date

_____
Title

STATE OF ILLINOIS
DEPARTMENT OF TRANSPORTATION

By_____
Contract Manager Date

APPROVED:

_____
Governor of Illinois Date

DRAFT

EXHIBIT A

State of Illinois/Department of Transportation

STANDARD GENERAL PROVISIONS
For
HIGHWAY-RAILROAD AGREEMENTS
BETWEEN THE STATE AND THE COMPANY

1. Specifications and Special Provisions. The standard specifications, including supplemental specifications and the project special provisions of the STATE shall apply to work performed by the contractor of the COMPANY.

2. COMPANY to Furnish Labor and Materials. The COMPANY or its contractors will furnish all labor, materials, equipment, tools and incidentals necessary to complete the work described in the Agreement and will perform such work in accordance with generally accepted highway and railroad standards and practices and the provisions of the Agreement. All furnished materials shall be in accordance with 23 CFR 635.410 Buy America requirements.

3. Materials recovered. Materials recovered from temporary use by the COMPANY and materials recovered due to substitution or replacement of the existing railroad facilities that are included as a part of the Agreement, shall be credited to the project in accordance with 23 CFR 140.908, Materials and Supplies.

4. Coordination of Work. The COMPANY will cooperate with and coordinate its work with that of the STATE to the extent practicable and feasible for the completion of the project.

5. Performance of Work. In connection with the performance of the work, the COMPANY will comply with Illinois Statutes.

6. Traffic Control. Unless traffic control devices will be provided and installed by the STATE, the COMPANY shall install traffic control devices and implement methods to adequately protect the traveling public at all times. The COMPANY shall conduct the Agreement work and subsequent maintenance work at grade crossings in accordance with Illinois Statutes. Such traffic control devices and methods and their installation or implementation shall conform to Part 6 of the Manual on Uniform Traffic Control Devices (MUTCD) published by the Federal Highway Administration and adopted by the Illinois Department of Transportation along with the Illinois Supplement to the MUTCD.

DRAFT

7. Authorization and Approval of Work. The work and COMPANY operations provided herein shall be subject to and meet the approval of the Administrator for the STATE or his authorized representative. Work shall not start until the COMPANY has received written notice from the STATE to proceed with the work. The COMPANY shall notify the Transportation Region Office for that area of the State in which the work is located when it will begin its operations and shall give similar notification when operations are resumed, subsequent to suspension of operations.
   Any significant change in the extent or scope of the work under the Agreement, including incidental work exceeding 25% of the original estimate for force work labor or the total cost of the work, shall be covered by a written contract change order. It is expressly understood and agreed that any work done by the COMPANY under the Agreement, prior to authorization by the STATE, shall be excluded from payment under the terms of the Agreement.

   The COMPANY may subcontract all or portions of the work included under the Agreement provided a market based competitive procurement process is used. Subcontracting of more than 50% of the labor must have prior approval of the STATE. An existing continuing contract under which the COMPANY has the same kind of work regularly performed at its own cost will be considered to conform to the requirements of this section provided that costs to the STATE are reasonable and the contract has the prior written approval of the STATE.

8. Nondiscrimination. In connection with the performance of work under the Agreement, the COMPANY agrees not to discriminate against any employee or applicant for employment because of age, race, religion, color, handicap, sex, physical condition, development disability as defined in Section x.x Illinois Statutes, sexual orientation as defined in Section x.x Illinois Statutes, or national origin. This provision shall include, but not be limited to, the following: employment, upgrading, demotion or transfer; recruitment or recruitment advertising; layoff or termination, rates of pay or other forms of compensation; and selection for training, including apprenticeship. Except for sexual orientation, the COMPANY further agrees to take affirmative action to ensure equal employment opportunities.

   The COMPANY shall post in conspicuous places, available to employees and applicants for employment, notices to be provided by the contracting officer for the STATE setting forth the provisions of the nondiscrimination clause.

9. Reimbursement, Records and Audit. Reimbursement to the COMPANY for work performed by COMPANY forces under the described project shall be subject to the provisions of 23 CFR, Part 140, Subpart I,

DRAFT

Reimbursement for Railroad Work. Overhead and indirect construction costs will not be reimbursed. Any costs incurred or charges made by the COMPANY not in compliance with the above shall be at the sole cost and expense of the COMPANY.

The COMPANY will submit a calculation of indirect cost rates applied in the contract within 180 days of the end of its fiscal year.

Reimbursement for work performed by a contractor hired by the COMPANY to perform work under an agreement between the STATE and the COMPANY shall be subject to the terms of such agreement between the STATE and the COMPANY. Subcontracted work that does not comply with the provisions of Section 7 of these Standard General Provisions will not be reimbursed.

The STATE will reimburse the COMPANY for the STATE 's share of the cost of the work on the basis of invoices (an original and two copies) sent to the STATE's Transportation Region Office, not more often than once a month during the progress of work for the partial payment on account of the work completed to date. Such invoices shall represent the value to the STATE of the partially completed work. Payment will be made promptly in an amount as has been found to reasonably represent the value of the partially completed work, less any amounts previously paid on account. An item which is not properly submitted or which appears questionable may be excluded from progress payments.

Estimated unit prices of construction items used for the purpose of determining the total cost of work under the Agreement upon which partial payments are to be based shall not be binding upon either party hereto for determining the actual ultimate gross amount due to the COMPANY under the Agreement.

An original and two copies of the complete and final invoice, including invoices from subcontractors, shall be submitted, to the STATE’s Transportation Region Office.

The COMPANY agrees and will require its subcontractors to agree to maintain all books, documents, papers, accounting records, and other evidence pertaining to costs incurred under the terms of the Agreement and to make such materials available at their respective offices at all reasonable times during the contract period and for a period of three years from the date final payment was received by the COMPANY for inspection and audit by the STATE, and/or Federal government. Copies of such records shall be furnished if requested.

DRAFT

10. Miscellaneous. The Agreement between the parties shall not be deemed to create a partnership between the parties and no party shall have the authority to obligate the other.

    The Agreement shall be governed under the laws of the State of Illinois. The parties shall at all times comply with and observe all federal and state laws, local laws, ordinances and regulations which are in effect during the period of the work and which affect the work.

    No right or duty in whole or in part of the Agreement may be assigned or delegated by the COMPANY without prior written consent of the STATE.

    The STATE reserves the right to terminate the work by the COMPANY in whole or in part without penalty due to non appropriation of funds or for failure of the COMPANY to comply with the terms, specifications, and conditions of the Agreement.

    The provisions of the Agreement are severable. The unenforceability of any provision shall not affect the enforceability of the remainder of the Agreement.

    No other correspondence, document, acceptance or acknowledgment shall be effective or binding between the parties unless expressly agreed to by each party in writing**.**

DRAFT

EXHIBIT B

AGREEMENT SUMMARY

Replacement of abutments and bridge spans with reinforced concrete ballasted deck for two bridges at MP 46.78 and 47.27 C&M Subdivision in Lake County, Illinois to eliminate impending speed restrictions.

DRAFT

EXHIBIT C

COST ESTIMATE AND ALLOCATION

Cost Categories	Subtotal
1- Administrative and legal expense	-
2- Land, structures, rights-of-ways, and appraisals	-
3- Relocation expenses and payments	**$ 23,693**
4- Architectural and engineering fees	**$ 88,850**
5- Project inspection fees	**$ 98,327**
6- Site work	-
7- Demolition and removal	**$ 207,317**
8- Construction labor	**$ 1,166,188**
9- Materials	**$ 135,645**
10- Equipment	**$ 50,941**
11- Misc. (purchase of contract services, other etc.)	**$ 4,845,039**
12- Contingencies at 10%	**$ 661,600**
13- Annual inflation at 2% for 2011 construction	**$ 145,552**
Total Cost:	**$ 7,423,152**
Funding Sources	
CP contribution:	**$ 3,711,576**
FRA contribution:	**$ 3,711,576**
Total Contribution:	**$ 7,423,152**

[1] All costs in excess of this will be borne by the COMPANY.

DRAFT

EXHIBIT D

PROJECT LOCATION

Canadian Pacific C&M Subdivision near Wadsworth, Illinois
Renewal of Two Bridges for Existing Passenger Rail Speed Preservation

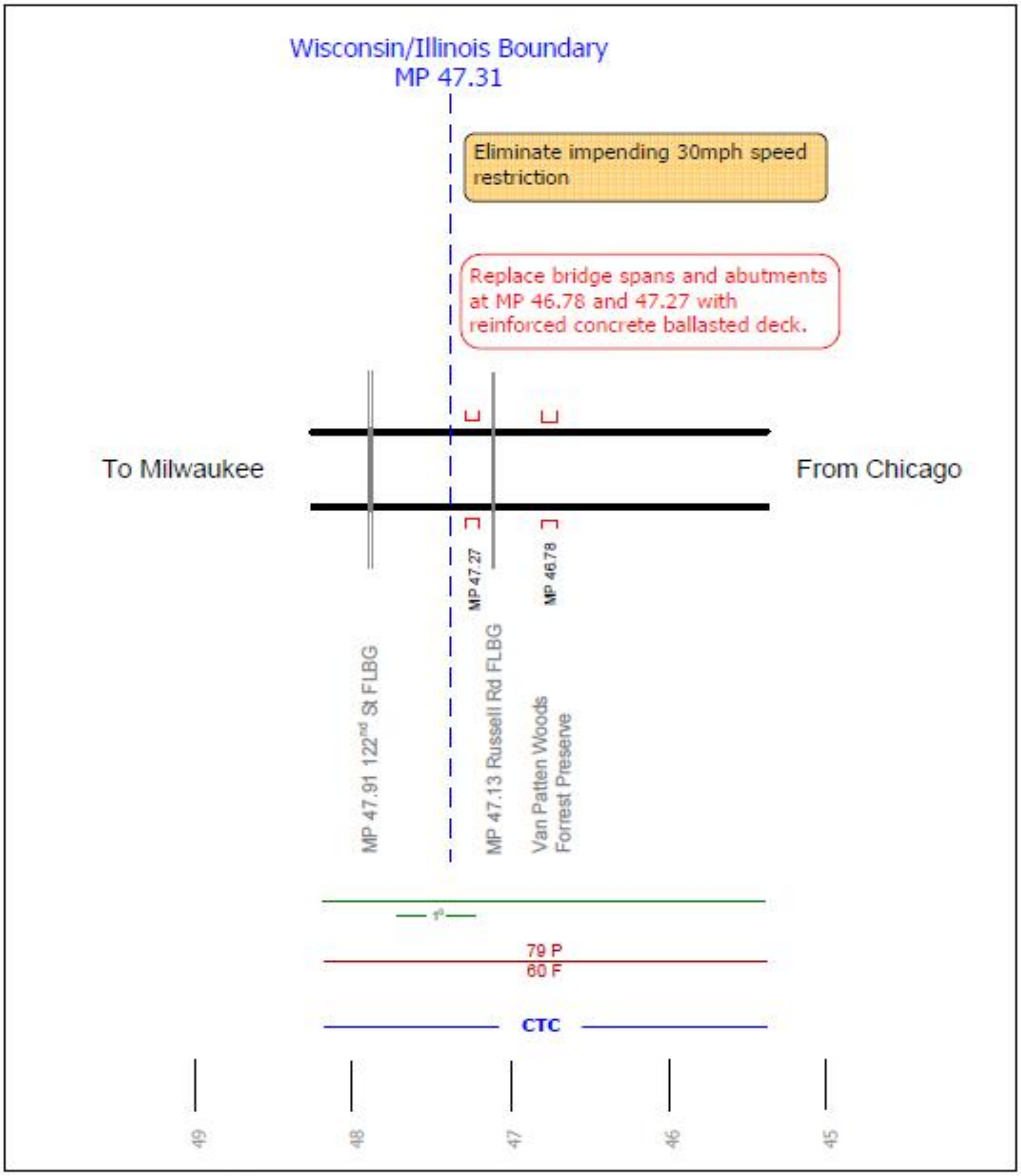

EXHIBIT E

PROJECT BENEFITS

A. Safety

The proposed project is consistent with CP's goal to be the safest railway in North America. The new bridge structures will incorporate modern engineering design standards for load and safety. It will also include elements consistent with Canadian Pacific's Standard Practice policies which address safety for track and signal maintenance and other railway workers.

B. Reliability

The full replacement of the two bridges provides long term reliability for the corridor between Milwaukee and Chicago. The project avoids impending speed restrictions at the two bridges that would adversely affect passenger train schedules and delays caused by Amtrak trains missing the Metra commuter operating windows.

C. On-time performance (OTP)

The proposed project will assist Amtrak services to maintain their top-of-class 90% on-time performance (OTP) on the Hiawatha and above average 80% OTP on the Empire Builder. Canadian Pacific is governed by its contract (SOO-143 dated June 1, 2004) with the National Railroad Passenger Corporation (Amtrak) to provide an on-time performance minimum standard. An on-time performance below this standard requires CP to subtract from earned Amtrak incentive payments as a penalty.

DRAFT

Exhibit E.2.2

IDOT-Amtrak Rail Service Agreement

GRANT AGREEMENT FOR THE PROVISION OF RAIL PASSENGER SERVICE

Between the

NATIONAL RAILROAD PASSENGER CORPORATION

and the

STATE OF ILLINOIS

July 1, 2009 through June 30, 2010

THIS GRANT AGREEMENT, herein referred to as the "Agreement", is made as of the 1st day of July, 2009 between the National Railroad Passenger Corporation, a corporation organized under federal law and the laws of the District of Columbia and having its principal place of business in Washington, D.C. ("Amtrak") and the State of Illinois acting by and through its Department of Transportation ("State").

WHEREAS, the State has determined a need to grant funds to Amtrak to provide rail passenger service as described herein and reasonably expects sufficient funds to be made available to pay for such service, and that it is authorized by Section 49.25 h (a) of the Civil Administrative Code, 20 ILCS 2705/2705-440 (a) to enter into this Agreement.

WHEREAS, the purpose of this Agreement is to provide for an Illinois-based system of intercity railroad passenger trains in connection with Amtrak's nationwide system, such system to operate for the benefit of Illinois residents and passengers connecting to interstate Amtrak trains.

WHEREAS, the intercity railroad passenger service covered by this Agreement consists of seven roundtrips Monday through Saturday and six roundtrips on Sunday between Chicago, Illinois and Milwaukee, Wisconsin, more particularly described below as the "Hiawatha Service".

NOW THEREFORE, the State will grant the funds provided by this agreement to Amtrak subject to the following conditions:

Section 1. Service to be Provided and Permissible Expenditures of Grant Funds

(a) Subject to sufficient appropriation of Federal funding for Amtrak, the term of this Agreement is for twelve (12) months commencing July 1, 2009, over the route, serving the stations and substantially in accordance with the schedules set forth in Appendix I to this Agreement, unless the State has given its prior written approval to any deviation from such parameters. In the event Federal funding for Amtrak

becomes unavailable for any reason, Amtrak may terminate this Agreement on thirty (30) days prior written notice to the State.

(b) Amtrak shall not be required to provide service on any other route, or to increase any train frequency, except pursuant to a mutually agreed upon amendment hereto: provided however, that this shall not preclude Amtrak from providing such service or increased frequency at its own cost or the cost of a party other than the State.

(c) The parties shall cooperate for the purpose of promoting the Hiawatha Service and shall take such other actions as they may agree are conducive to the provision of the Hiawatha Service on a regular, efficient and economical basis; provided however, that the State shall have no obligation to contribute moneys for that purpose or for purposes other than those moneys set forth in Section 3 of this Agreement. Amtrak shall advertise and market the Hiawatha Service as it deems appropriate and may incorporate the Hiawatha Service in its general advertising and promotional programs, as it deems appropriate. In the event that during the tenure of this Agreement, the State provides funds to promote the Hiawatha Service, Amtrak will endeavor to match the States' funds for purposes of promoting the service. The State may, with Amtrak's approval, provide assistance with respect to any such advertising and marketing efforts.

(d) Amtrak shall insert in all published timetables the following statement: "This service is financed, in part, through funds made available by the State of Illinois, Department of Transportation."

(e) Amtrak's obligations to provide the Hiawatha Service shall not be deemed to be satisfied through the operation of other regularly scheduled interstate trains. This Agreement shall not prevent Amtrak from altering or terminating any other service it provides.

(f) Amtrak will make available to the Hiawatha Service sufficient locomotives and cars so as to operate the Service according to schedules and other criteria established by this Agreement. The operating conditions of said locomotives and cars shall be in compliance with standards established under Federal laws and regulations. At least one car per train shall be fully accessible to the handicapped. All trains operated in the Hiawatha service, as listed in Appendix I, shall operate in push-pull service and shall, for the month of July 2009, operate with a minimum of five (5) passenger coaches. The parties further agree however, that effective August, 1, 2009, and continuing through the expiration of this agreement, unless otherwise agreed to in writing by the parties, each trainset used in Hiawatha Service shall operate with a minimum of six (6) passenger coaches.

Section 2. Changes Affecting Hiawatha Service

(a) The State may at any time request changes in any aspect of the Hiawatha Service by giving written notice of such request to Amtrak. Such notice shall be faxed or e-mailed and also sent registered mail with confirmed delivery and shall contain a proposed date of implementation and information in sufficient detail to support and justify the proposed change. Amtrak's response shall state that it concurs or, in the alternative, give reasons in sufficient detail as to why it does not concur with the proposed change, such concurrence not to be unreasonably withheld. If Amtrak fails to respond in writing within sixty (60) days of receipt of such notice, it shall be deemed to have concurred in the proposed change.

(b) Amtrak may at any time request changes in any aspect of the Hiawatha Service by giving written notice of such request to the State. Such notice shall be faxed or e-mailed and also sent registered mail with confirmed delivery and shall contain a proposed date of implementation and information in sufficient detail to support and justify the proposed change. The State's response shall state that it concurs or, in the alterative, give reasons in sufficient detail as to why it does not concur with the proposed change, such concurrence not to be unreasonably withheld. If the State fails to respond in writing within sixty (60) days of receipt of such notice, it shall be deemed to have concurred in the proposed change.

(c) If access to or over required rail lines shall be unavailable for any reason, including Force Majeure as set forth in Section 6 herein, Amtrak may suspend or reroute any part of the Hiawatha Service for so long as such access is unavailable. Amtrak shall promptly notify the State of any such suspension or rerouting and shall mitigate the effects of such suspension or rerouting, insofar as is commercially reasonable, with all reasonable dispatch.

(d) Amtrak may at any time, with or without the State's concurrence, make changes in the Hiawatha Service that are, in its opinion, necessary for safety, environmental or regulatory reasons. Amtrak shall promptly notify the State of any such changes. Said changes include but are not limited to, compliance with rulings by the Federal Railroad Administration, National Transportation Safety Board, the Department of Homeland Security, the Food and Drug Administration and the Environmental Protection Agency.

(e) Any changes to the Hiawatha Service made pursuant to Subsections (a), (b), (c) or (d) above may, if agreed to in writing between the parties, result in an adjustment of the amounts paid by the State.

Section 3. Amount and Timing of Grant Funds by the State

(a) The State shall pay Amtrak the following financial support for the operation of the Hiawatha Service for the period from July 1, 2009 through and including June 30, 2010:

(i) The sum of Six Hundred and Fifty-Three Thousand, and Five Hundred and Six Dollars ($653,506.00) representing a fixed fee for the State's proportional twenty-five percent (25%) share of all projected and non-reimbursed operational costs of the Hiawatha Service other than fuel and host railroad expenses. "Host railroad expenses" shall be defined as maintenance of way and performance incentive expenses. The State and Amtrak agree that the above described fixed fee amount represents a fixed fee for the Hiawatha Service, mutually agreed upon by the parties and not subject to audit adjustment.

(ii) The State's proportional twenty-five percent (25%) share of total actual fuel and host railroad expenses incurred by Amtrak as the result of operating the Hiawatha Service for the period from July 1, 2009 through June 30, 2010. Fuel expense shall be calculated based upon the total number of train miles operated by the Hiawatha Service during each month multiplied by a consumption rate per train mile, including idling and layover fuel, as mutually agreed upon by the parties. The product of these factors shall in turn be multiplied by the combined average cost-per-gallon paid by Amtrak on a monthly basis at Milwaukee, WI and Chicago, IL, as appropriate. All fuel and host railroad expenses shall be computed by Amtrak on a monthly basis and documented to the State. In addition, all fuel and host railroad expenses incurred shall be billed to and paid monthly by the State on an actual cost basis. The State shall not be charged for fuel consumption of a second locomotive if it is operated in lieu of a non-power control unit (NPCU) in any of the Hiawatha Trains set forth in Appendix I.

(b) In the absence of a written agreement to the contrary, the parties agree that the total charge to the State for the its proportional twenty-five percent (25%) share of funding for the operation of the Hiawatha Service from July 1, 2009 through June 30, 2010 shall not exceed Two Million Dollars ($2,000,000.00). The parties further agree that on the last day of the sixth month of the contract period the parties will review the actual fuel and host railroad costs for the preceding six months in order to evaluate whether or not the remaining available State funds are likely to meet the projected fuel and host railroad costs for the remaining six months of the contract period. In the event that the amount of

projected fuel and host railroad costs for the remaining six months of the contract period exceed the remaining available State funds, the State agrees to (a) obtain supplemental funding and/or (b) work with Amtrak to implement any and all necessary service modifications to comply with the funding limitations of the State specified herein.

(c) Subject to the limitation imposed by Section 3(b), the State shall remit to Amtrak one-twelfth of the fixed fee set forth in Section 3(a) (i) above by means of timely monthly payments. Each such payment shall be in the amount of Fifty-Four Thousand and Four Hundred and Fifty-Eight Dollars and Eighty-Four Cents ($54,458.84). All monthly payments due under Section 3(a) (i) shall be payable to Amtrak, in full, on the first day of the month for service to be provided during that month. Any such payment that is due on a date that precedes the actual execution of this Agreement shall be due and payable on the date of such execution. Except for any such payments due on the date of execution hereof, the State shall remit to Amtrak all contractually due amounts due under Section 3(a) (i) within thirty (30) days of the monthly payment schedule specified in the third sentence of this section. In addition, the State shall remit full payment of all fuel and host railroad expenses payable under Section 3(a) (ii) within thirty (30) days of receipt of an invoice from Amtrak. Notwithstanding the 180-day notice requirement contained in 49 U.S.C. Subsection 24706(a), if the State fails to remit full payment of all amounts payable under Sections 3(a) (i) and (ii) when due, Amtrak may discontinue any or all of the Hiawatha Service after thirty (30) days prior written notice to the State.

(d) In the event that Amtrak and the State of Wisconsin do not reach agreement covering operation and/or funding of Hiawatha Service for the twelve month period of July 1, 2009 through June 30, 2010, Amtrak may discontinue all contract service upon thirty (30) days prior written notice to the State of Illinois. Any such discontinuance under this section shall terminate the State's obligation hereunder to pay for any Hiawatha Service not yet provided, and shall not constitute or be considered as a waiver by Amtrak of payment, at the rate established in Sections 3(a) and 3(c) for service provided hereunder.

(e) Any termination of all or a portion of the Hiawatha Service shall be without prejudice to Amtrak's right to receive payment in proportion to the amount of service provided through the date of actual termination of the Hiawatha Service.

Section 4. Indemnity and Defense

Amtrak shall assume all liability and defend, indemnify and hold harmless the State from any and all losses or expenses (including reasonable attorney's fees incurred in enforcing this provision), arising

from claims, actions, or proceedings for injury to or death of any person or for damage to or loss of any property arising from the operation of the Hiawatha Service. If any claim, action or proceeding shall at any time be brought against the State asserting a liability for such injury, death, damage or loss, the State shall promptly give notice thereof to Amtrak and Amtrak shall promptly undertake the defense of such claim, action or proceeding. The State agrees to thereafter provide all such information and reasonable assistance as Amtrak may request from time to time.

Section 5. Inspections

(a) The State may, at any reasonable time and upon reasonable notice, inspect Amtrak's facilities and equipment used in providing the Hiawatha Service; provided, that such inspection shall comply with all applicable safety rules and regulations and shall not hinder or delay the operation of the service. Subject to compliance with Amtrak's policies on locomotive access, this will include authority to ride the head end or locomotive of State-supported trains for those State titles listed on Appendix II of this Agreement. Amtrak will provide the State employees authorized under Appendix II with all necessary safety equipment, other than protective footwear. The State agrees to notify Amtrak in advance of its employees' intent to ride the head end or locomotive of State-supported trains, and to require that those employees sign a waiver releasing Amtrak from any liability that may result therefrom. A list of names holding the titles listed in Appendix II will be provided to Amtrak within 7 days of the signing of this Agreement. Any future personnel changes during the term of this Agreement will be provided to Amtrak as soon as possible.

(b) Upon reasonable notice, Amtrak shall permit the State Auditor General's office, or a designated representative, access to inspect all books, records and supporting documents relating to the Hiawatha Service, so as to verify the proportionate cost of each component of the Hiawatha Service as contemplated by Section 3. Amtrak agrees to cooperate fully with any audit conducted by the Auditor General and to provide full access to all relevant materials. Amtrak further agrees that all such books, records, and supporting documents shall be maintained by Amtrak and shall be accessible to the State for three (3) years following expiration of the Hiawatha Service provided for in this Agreement. All such financial information made available to the State, and not subject to public disclosure pursuant to the Freedom of Information Act, shall be deemed to be a trade secret, or to contain proprietary, privileged or confidential information. Subject to applicable law, no other use of such information shall be made without Amtrak's express written approval.

(c) Amtrak shall provide to the State access to daily "Delay Reports" for each train within the Hiawatha Service. In addition, Amtrak will provide the State with access to daily morning reports and on

time performance data for its entire system. This access shall include, without limitation, daily monthly on time performance data for each train listed in Appendix I to include delay by railroad, delay code, minutes of delay and rank of each category in terms of percentage of delay attributed.

(d) Amtrak shall make available to the State such ridership data relating to the Hiawatha Service that is available in Amtrak's information retrieval system, e.g., passengers carried, revenues and passenger miles. Such data shall be computed on a monthly basis and furnished periodically, as may be agreed between the parties. Amtrak shall endeavor to provide such other performance data relating to the Hiawatha Service as may be reasonably available.

Section 6. Force Majeure

(a) The obligations of Amtrak hereunder shall be subject to force majeure. Amtrak shall not be liable for any failure to perform, or for any delay or cancellation in connection with the performance of any obligation hereunder, if such failure, delay or cancellation occurs due to causes reasonably beyond the control and without fault or negligence of Amtrak, including but not restricted to the following: acts of God; riots, insurrection, terrorism or war; or strikes or picketing.

(b) If, because of an event of force majeure, Amtrak is unable to carry out its obligations under this Agreement, then its obligation shall be suspended to the extent made necessary by such force majeure and during its continuance. Amtrak promptly shall give the State written notice of such force majeure with sufficient details as to the extent and probable duration of the effects. Amtrak shall mitigate the effects of such force majeure (other than strikes or lockouts, which shall be wholly at the discretion of Amtrak) insofar as is commercially reasonable, with all reasonable dispatch.

Section 7. Termination

Except as otherwise provided in this Agreement, this Agreement may be terminated by either party upon one hundred and eighty (180) days' notice to the other. Termination of this Agreement shall be without prejudice to the State's obligation to reimburse Amtrak hereunder for the Service and for any associated capital or other costs, provided until and including the date of termination.

Section 8. Notices

Any notices required by this Agreement or related to the Hiawatha Service provided for under this Agreement by either party shall be in writing and shall be directed to the officials identified herein by personal delivery or by deposit in the United States mail, certified first class delivery return receipt requested. The representatives and/or addresses set forth herein may be changed at any time by either party by notice in writing to the other.

For Amtrak: Senior Director, State Partnerships
National Railroad Passenger Corporation
525 W. Van Buren St.
Chicago, IL 60607

For the State: Chief, Bureau of Railroads
Illinois Department of Transportation
J. R. Thompson Center, Suite 6-600
100 West Randolph Street
Chicago, IL 60601

Section 9. Agreement Content

This Agreement constitutes the entire agreement between the parties with respect to the subject of rail passenger service on the route covered herein. There are no agreements, whether express or implied, except as may be expressly set forth herein. All prior agreements and understandings between them with respect to the provision of rail passenger service on the route covered herein on or after the effective date of this Agreement or any renewal thereof are subsumed within this Agreement and any renewal thereof. No change in or modification to this Agreement shall be of any force or effect unless in writing, dated and executed by duly authorized representatives of the parties.

Section 10. Construction

The Section headings used in this Agreement are for convenience only and shall not affect the construction of any terms hereof. This Agreement shall be governed by the laws of the State of Illinois, except as may otherwise be required by federal law.

Section 11. Severability

If any part of this Agreement is determined invalid, illegal or unenforceable, such determination shall not affect the validity, legality or enforceability of any other part of this Agreement and the remaining parts of this Agreement shall be enforced as if such invalid, illegal or unenforceable part was not contained herein.

Section 12. Subcontracting

Subcontracting, assignment or transfer of all or part of the interests of Amtrak concerning any of the obligations covered by this Agreement is prohibited without prior written consent of the State.

Section 13. Employment of Department Personnel

Amtrak shall not employ or enter into a contract with any employee of the Illinois Department of Transportation for purposes of fulfillment of the terms of this Agreement without the express written consent of the Secretary of Transportation.

Section 14. Non-Appropriation

This Agreement is subject to termination and cancellation in any year for which the General Assembly fails to make an appropriation to make grant payments under the terms of the Agreement.

Section 15. Status of Contractor

Services provided by Amtrak pursuant to this Agreement shall be as an independent contractor and neither Amtrak nor any employee or agent thereof shall be considered to be an employee of the State of Illinois.

Section 16. Grant Funds

Grant funds are available for expenditure or obligation by Amtrak in accordance with the provisions of Section 3 of this Agreement. Grant funds remaining after one year following the expiration of this Agreement shall be returned to the State within forty-five (45) days. Any grant funds which have been misspent or are being improperly held are subject to recovery in accordance with the "Illinois Grant Funds Recovery Act", 30 ILCS 705.

Section 17. Non-Discrimination – Federal Requirements

Amtrak certifies that Amtrak, its employees and subcontractors will comply with applicable provisions of the U.S. Civil Rights Acts, Section 504 of the Federal Rehabilitation Acts, the Americans with Disabilities Act (42 U.S.C. 12101 et. seq.) and applicable rules of such acts in performance of this Agreement.

Section 18. Delinquent Debt

Amtrak and its affiliates are not delinquent in the payment of any debt to the State (or if delinquent has entered into a deferred payment plan to pay the debt), and Amtrak and its affiliates acknowledge the contracting State agency may declare this Agreement void if this certification is false or if Amtrak or an affiliate later becomes delinquent and has not entered into a deferred plan to pay off the debt.

Section 19. Drug-Free Workplace

Pursuant to the Drug Free Workplace Act (30 ILCS 580) Amtrak certifies that it will provide a drug free workplace by:

(a) Publishing a statement notifying employees that the unlawful manufacture, distribution, possession or use of a controlled substance, including cannabis, is prohibited in the workplace; specifying the actions that will be taken against employees for violations of such prohibition; and notifying the employee that, as a condition of employment, the employee shall abide by the terms of the statement, and notify the employer of any criminal drug statute conviction for a violation occurring in the workplace no later than five (5) days after such conviction.

(b) Establishing a drug free awareness program to inform employees about the dangers of drug abuse in the workplace; the policy of maintaining a drug free workplace; any available drug counseling, rehabilitation and employee assistance programs; and the penalties that may be imposed upon employees for drug violations.

(c) Providing a copy of the statement required by subparagraph (a) to each employee engaged in the performance of the grant and to post the statement in a prominent location in the workplace.

(d) Notifying the State within ten (10) days after receiving notice from an employee or otherwise receiving actual notice of the conviction of any employee for a violation of a criminal drug statue occurring in the workplace.

(e) Imposing or requiring, within thirty (30) days after receiving notice from an employee of a conviction or actual notice of such a conviction, an appropriate personnel action, up to and including termination, or the satisfactory participation in a drug abuse assistance or rehabilitation program approved by a federal, state or local health, law enforcement or other appropriate agency.

(f) Assisting employees in selecting a course of action in the event drug counseling, treatment and rehabilitation is required and indicating that a trained referral team is in place.

(g) Making a good faith effort to continue to maintain a drug free workplace through implementation of the actions and efforts stated in this certification.

Section 20. International Anti-Boycott

Amtrak certifies that neither Amtrak nor any substantially owned affiliate is participating or shall

participate in an international boycott in violation of the U.S. Export Administration Act of 1979 or the applicable regulations of the U.S. Department of Commerce.

Section 21. Bid Rigging

Amtrak certifies that it has not been convicted of the offense of bid rigging or bid rotating or any similar offense of any State of the United States.

Section 22. Equal Employment Opportunities

Amtrak certifies that it will comply with the Illinois Department of Human Rights Act and rules applicable to public contract, including equal employment opportunity, refraining from unlawful discrimination and having written sexual harassment policies.

Section 23. Discriminatory Club Dues

Amtrak does not pay dues to, or reimburse or subsidize payments by its employees for any dues, or fees to any "discriminatory club."

Section 24. Termination Notice

49 U.S.C. subsection 24706(a) requires that at least 180 days before "discontinuing service over a route, Amtrak will give notice of the discontinuance in the way Amtrak decides will give a State, a regional or local authority, or another person the opportunity to agree to share or assume the cost of any part of the train, route or service to be discontinued." Because the availability of State funding upon the expiration or termination of this Agreement is not now known, Amtrak and the State agree that this Section does, and shall be deemed to, constitute adequate notice under 49 U.S.C. subsection 24706(a) so that the State (and/or others working with the State, such as regional or local authorities) has the opportunity to agree to share or assume the cost of continuing the service provided by Amtrak hereunder upon such termination. The State concurs with Amtrak's decision that no notice beyond that set forth in this section need be given. In the event that the State does not receive adequate funding to support continuation of services beyond June 30, 2010, the State and Amtrak agree that the contract may be terminated upon thirty days notice.

IN WITNESS WHEREOF, the parties hereto have caused this Agreement to be executed by their duly authorized representatives in multiple original counterparts as of the day and year first above written.

NATIONAL RAILROAD PASSENGER CORPORATION

By: _____ Date 11/18/09

Joseph Boardman
President and Chief Executive Officer
Amtrak

STATE OF ILLINOIS

By: _____ Date 12-14-09

Gary Hannig
Acting Secretary of Transportation
State of Illinois

_____ Date _____

Joseph P. Clary,
Director, Division of Public and Intermodal Transportation
Illinois Department of Transportation

Approved as to form:

_____

Ellen J. Schanzle-Haskins
Chief Counsel
Illinois Department of Transportation

Approved as to form:

_____

Amtrak Law Department

_____

Ann L. Schneider
Director, Finance and Administration
Illinois Department of Transportation

APPENDIX I
HIAWATHA SERVICE
ROUTES AND STATIONS

Pursuant to Section 1 of the attached Agreement and subject to compliance by the State with the provisions of Section 3 thereof, Amtrak shall provide rail passenger service over the routes set forth below. This said service shall commence on the first day of July 2009.

Train Number	329	331	333	335	337	339	341
	Mon.-Sat.	Daily	Daily	Daily	Daily.	Daily	Daily
Chicago, IL	6:00 am	8:25 am	10:20 am	1:05 pm	3:15 pm	5:08 pm	8:05 pm
Glenview, IL	6:22 am	8:47 am	10:42 am	1:27 pm	3:37 pm	5:32 pm	8:27 pm
Sturtevant, WI	7:00 am	9:25 am	11:20 am	2:05 pm	4:15 pm	6:14 pm	9:05 pm
MARS (1)	7:14 am	9:39 am	11:34 am	2:19 pm	4:29 pm	6:28 pm	9:19 pm
Milwaukee, WI	7:29 am	9:54 am	11:49 am	2:34 pm	4:44 pm	6:45 pm	9:34 pm

Train Number	330	332	334	336	338	340	342
	Mon.-Sat.	Daily	Daily	Daily	Daily	Daily	Daily
Milwaukee	6:15 am	8:00 am	11:00 am	1:00 pm	3:00 pm	5:45 pm	7:35 pm
MARS (1)	6:26 am	8:10 am	11:10 am	1:10 pm	3:10 pm	5:55 pm	7:45 pm
Sturtevant, WI	6:43 am	8:23 am	11:23 am	1:23 pm	3:23 pm	6:08 pm	7:58 pm
Glenview, IL	7:25 am	9:01 am	12:01 pm	2:01 pm	4:01 pm	6:46 pm	8:36 pm
Chicago	7:57 am	9:29 am	12:29 pm	2:29 pm	4:29 pm	7:14 pm	9:04 pm

(1) Milwaukee Airport Rail Station ("MARS")

APPENDIX II

HIAWATHA SERVICE

HEAD END INSPECTORS

Name	Title
George Weber	Acting Chief, Bureau of Railroads
Vacant	Chief, Passenger Rail Section
Steven McClarty	Chief, Freight Section
Michael Garcia	Track Engineer, Freight Section

Exhibit E.3.1

Letter of Funding Commitment

CANADIAN PACIFIC RAILWAY

Gord Pozzobon
Vice President
Engineering Operations

401 – 9th Avenue S.W.
Calgary, AB T2P 4Z4

May 4, 2010

Mr. George Weber
Bureau Chief, Railroads
Illinois Department of Transportation
100 West Randolph
Chicago, IL 60601-3229

RE: ARRA application for Wadsworth bridges C&M MP 46.78 and CP 47.27

Dear Mr. Weber,

Canadian Pacific Railway (CP) is encouraged that the Illinois Department of Transportation (IDOT) will be applying for funds made available through the American Recovery and Reinvestment Act (ARRA) for replacement of two railroad bridges on its Intercity Passenger Rail System between Chicago and Milwaukee.

CP understands that the funding program requires a shared 50% federal and local match for which CP will provide the 50% local match.

We also understand that in order to qualify for this funding, IDOT requires a stakeholders agreement. Therefore, we have attached a suggested agreement which identifies the replacement of bridge spans and abutments at two bridges, located at MP 46.78 and 47.27 of the C&M Subdivision. This project will sustain the high level of reliability and on-time performance of passenger and freight service by preventing the impending onset of slow orders.

We would be pleased to collaborate with IDOT to complete the requisite ARRA application which is due for filing on May 19, 2010.

Sincerely,

Gord Pozzobon

Gord Pozzobon
Vice-President
Engineering Operations

Enclosures

Exhibit E.4.1

CP 2009 Annual Report

Canadian Pacific

Annual Report 2009

1 Chairman's Message to Shareholders
2 Chief Executive Officer's Letter to Shareholders
3 Management's Discussion and Analysis
50 Financial Statements
107 Shareholder Information
109 Directors and Committees
110 Senior Officers of the Company

CHAIRMAN'S MESSAGE TO SHAREHOLDERS

Over the last year the Board of Directors was actively engaged in overseeing the strategy of Canadian Pacific Railway during uncertain economic times while continuing to apply and enhance strong corporate governance practices.

We have a seasoned and independent Board of Directors who continuously review the strategic direction of CP in order to protect and enhance shareholder value. The successful financial flexibility and cost reduction initiatives undertaken by management leave CP well positioned to be resilient for the future.

The Board of Directors is committed to ensuring that we have the right mix of broad and diverse expertise to carry out our responsibilities. During these challenging times, we recognize the importance of sound business judgment, thoughtful analysis, and strong personal integrity in the boardroom. In 2009, we were pleased to welcome our newest director, Mr. David Raisbeck, who is the retired Vice-Chairman of Cargill Inc. His knowledge of the global commodity products that are central to CP's business, proven strategic vision, and risk management experience enhance key competencies of the Board.

We remain proactive in adopting and applying best practices in corporate governance and were honoured to receive the 2009 Governance Gavel award for Director Disclosure from the Canadian Coalition for Good Governance. We take good governance seriously and are committed to continuously improving clear and comprehensive disclosure. Commencing in 2011, we will be providing shareholders with the opportunity to participate in an advisory vote on executive compensation, also known as "say on pay".

To assist us in fulfilling our role of safeguarding the interests of shareholders, we continue our director education program to continually expand our knowledge of CP and the railway industry. Over the past year, we have received regular reports and presentations on the changing regulatory and business environment. We also engaged in an extensive tour of the rail and port infrastructure located in the lower mainland of British Columbia, Canada.

As Chairman, I would like to take this opportunity to extend the Board's appreciation to Fred Green, his management team, and all employees of CP for their contributions to the success of CP in a challenging year. Everyone at CP remains focused on safe operations while continuing to enhance the stability and strength of the franchise.

Sincerely,

John E. Cleghorn, O.C., FCA
Chairman of the Board

CHIEF EXECUTIVE OFFICER'S LETTER TO SHAREHOLDERS

2009 was an extraordinary year and Canadian Pacific was equal to the task. While we experienced unprecedented decreases in traffic volumes, we met those challenges with a solid strategy based on five key objectives:

- Managing our balance sheet to ensure financial flexibility;
- Driving productivity improvements to reduce variable costs;
- Reducing structural costs;
- Sustaining price increases through consistent, reliable service; and
- Creating and preserving growth options.

In uncertain economic times, a strong balance sheet gives CP the flexibility to seize opportunities as they arise. In 2009, we completed a number of large financial transactions that strengthened our balance sheet and improved near term liquidity. These actions included issuing new equity, multiple debt tenders and issuances, and the monetization of non strategic assets. Additionally, we made prepayments in excess of $500 million to our Canadian and US defined benefit pension plans. As we move into 2010, CP is well positioned to manage in the ongoing uncertain economic climate.

In 2009, adjusting our variable expenses to match our revenue declines was critical and we successfully reduced operating expenses by 17 percent in line with the decrease in revenue of 18 percent. We stored locomotives and railcars and implemented technology that reduced locomotive fuel costs. We took the unfortunate, but necessary, action of temporarily laying off up to 2,700 employees during the periods of our worst volume decreases.

We also made good progress on the longer term goal of lowering our structural costs. We tested and are now running 10,000 foot trains. We consolidated and rationalized certain mechanical repair facilities, and we continue to adjust our management structure.

Despite the significant downturn in the economy, we didn't lose sight of creating and preserving opportunities for growth. In our industry, our investments can have a 10, 20, or 30 year horizon and we must balance near-term pressures with a long-term horizon. The proposed intermodal facilities in Regina, Edmonton, Les Cedres outside Montreal, and the Alberta Industrial Heartland are examples of growth projects that we continued to pursue, albeit in a paced fashion.

Our vision remains to be the safest, most fluid railway in North America and in 2009, as we continued to make safety a top priority, we saw a decline in the incident rate of 23 percent.

CP continues to recognize the importance of maintaining our partnerships with the more than 1,100 communities through which we operate. In 2009, we celebrated the 100th Anniversary of the completion of the Spiral Tunnels in the Kicking Horse Pass in partnership with Parks Canada, the town of Field, B.C. and the Burgess Shale Geoscience Foundation. We also marked the 100th anniversary of the building of the Lethbridge Viaduct. Our Holiday Train visited over 130 communities in six provinces and seven states to raise food, money and awareness for local food banks. This was the 11th year that CP has taken the Holiday Train across the continent, and despite the tough economic climate, CP recognized that now, more than ever, the people in our communities need this program and we remain committed to it.

Canadian Pacific was the official rail services supplier to the Vancouver 2010 Olympic and Paralympic Winter Games which took place very recently. Through CP's sponsorship 28 employees experienced carrying the Olympic torch, 46 CP volunteers assisted VANOC on-site in many different roles, and we were privileged to host key stakeholders on the Royal Canadian Pacific that was located in Vancouver during the Games. We are proud that our company was a part of this world welcoming event.

In summary, 2009, while a very difficult year, has proved to be a turning point for CP. The lessons learned in difficult times will serve us well as we move into 2010 and beyond. With continuing economic uncertainty, CP is firmly focused on managing fixed and variable costs and ensuring we continue to price for value. Maintaining our financial flexibility and focusing on safe and efficient operations will position us well for the future and the inevitable upturn in the economy. Though we will continue to see change and improvement in our business, delivering a consistent, quality service to our customers remains a cornerstone of the CP franchise.

Sincerely,

Fred J. Green
President and Chief Executive Officer

MANAGEMENT'S DISCUSSION AND ANALYSIS

For the year ended December 31, 2009

TABLE OF CONTENTS

1.0 Business Profile 4

2.0 Strategy 4

3.0 Additional Information 4

4.0 Financial Highlights 4

5.0 Operating Results 6
5.1 Income 6
5.2 Diluted Earnings per Share 6
5.3 Operating Ratio 7
5.4 Impact of Foreign Exchange on Earnings 7

6.0 Non-GAAP Earnings 7

7.0 Lines of Business 9
7.1 Volumes 9
7.2 Revenues 10
7.3 2009 to 2008 Comparatives 11
7.3.1 Freight Revenues 11
7.3.2 Other Revenues 12
7.3.3 Freight Revenue per Carload 13
7.3.4 Freight Revenue per Revenue Ton Mile 13
7.4 2008 to 2007 Comparatives 14
7.4.1 Freight Revenues 14
7.4.2 Other Revenues 14
7.4.3 Freight Revenue per Carload 15
7.4.4 Freight Revenue per Revenue Ton Mile 15

8.0 Performance Indicators 15
8.1 Efficiency and Other Indicators 15
8.2 Safety Indicators 16

9.0 Operating Expenses 17
9.1 2009 to 2008 Comparatives 17
9.2 2008 to 2007 Comparatives 18

10.0 Other Income Statement Items 19

11.0 Quarterly Financial Data 22
11.1 Quarterly Trends 23

12.0 Fourth-Quarter Summary 23
12.1 Operating Results 23
12.2 Non-GAAP Earnings 24
12.3 Revenues 24
12.4 Operating Expenses 25
12.5 Other Income Statement Items 26
12.6 Liquidity and Capital Resources 26

13.0 Changes in Accounting Policy 26
13.1 2009 Accounting Changes 26
13.2 Future Accounting Changes 28

14.0 Liquidity and Capital Resources 28
14.1 Operating Activities 28
14.2 Investing Activities 29
14.3 Financing Activities 29
14.4 Free Cash 31

15.0 Balance Sheet 32

16.0 Financial Instruments 33

17.0 Off-Balance Sheet Arrangements 36

18.0 Acquisition 36

19.0 Contractual Commitments 37

20.0 Future Trends and Commitments 37

21.0 Business Risks and Enterprise Risk Management 39
21.1 Teck Coal Limited 39
21.2 Competition 39
21.3 Liquidity 39
21.4 Regulatory Authorities 40
21.5 Labour Relations 41
21.6 Environmental Laws and Regulations 41
21.7 Climate Change 42
21.8 Financial Risks 42
21.9 General and Other Risks 43

22.0 Critical Accounting Estimates 43

23.0 Systems, Procedures and Controls 46

24.0 Forward-Looking Information 46

25.0 Glossary of Terms 48

This Management's Discussion and Analysis ("MD&A") supplements the Consolidated Financial Statements and related notes for the year ended December 31, 2009. Except where otherwise indicated, all financial information reflected herein is expressed in Canadian dollars. All information has been prepared in accordance with Canadian generally accepted accounting principles ("GAAP" or "Canadian GAAP"), except as described in Section 6.0 Non-GAAP Earnings of this MD&A.

February 25, 2010

In this MD&A, "our", "us", "we", "CP" and "the Company" refer to Canadian Pacific Railway Limited ("CPRL"), CPRL and its subsidiaries, CPRL and one or more of its subsidiaries, or one or more of CPRL's subsidiaries, as the context may require. Other terms not defined in the body of this MD&A are defined in Section 25.0 Glossary of Terms.

Unless otherwise indicated, all comparisons of results for the fourth quarter of 2009 are against the results for the fourth quarter of 2008. Unless otherwise indicated, all comparisons of results for 2009 and 2008 are against the results for 2008 and 2007, respectively.

1.0 Business Profile

CPRL is a holding company whose direct and indirect subsidiaries operate railways in North America. The main operating subsidiary of the Company, Canadian Pacific Railway Company ("CPRC"), was incorporated in 1881. CPRC is one of Canada's oldest corporations. From its inception 129 years ago, CPRC has developed into a fully integrated and technologically advanced Class I railway providing rail and intermodal freight transportation services over a 15,400 mile network serving the principal business centres of Canada, from Montreal, Quebec to Vancouver, British Columbia, and the US Midwest and Northeast regions. Our railway feeds directly into the US heartland from the East and West coasts.

Agreements with other carriers extend our market reach east of Montreal in Canada, throughout the US and into Mexico. Through our subsidiaries, we transport bulk commodities, merchandise freight and intermodal traffic. CPRL also provides service to markets in Europe and the Pacific Rim through direct access to the Port of Montreal, Quebec and the Port Metro Vancouver in Vancouver, British Columbia, respectively.

Bulk commodities include grain, coal, sulphur and fertilizers. Merchandise freight consists of finished vehicles and automotive parts, as well as forest and industrial and consumer products. Intermodal traffic consists largely of high-value, time-sensitive retail goods in overseas containers that can be transported by train, ship and truck, and in domestic containers and trailers that can be moved by train and truck.

CPRL's network accesses the US market directly through three wholly owned subsidiaries: Soo Line Railroad Company ("Soo Line"), a Class I railway operating in the US Midwest; Dakota, Minnesota and Eastern Railroad Corporation ("DM&E"), a wholly owned subsidiary of the Soo Line, which operates in the US Midwest and the Delaware and Hudson Railway Company, Inc. ("D&H"), which operates between eastern Canada and major US Northeast markets, including New York City, New York; Philadelphia, Pennsylvania; and Washington, D.C.

2.0 Strategy

Our vision is to become the safest and most fluid railway in North America. Through the ingenuity of our people, it is our objective to create long-term value for our customers, shareholders and employees. We seek to accomplish this objective through the following three-part strategy:

- generating quality revenue growth by realizing the benefits of demand growth in our bulk, intermodal and merchandise business lines with targeted infrastructure capacity investments linked to global trade opportunities;
- improving productivity by leveraging strategic marketing and operating partnerships, executing a scheduled railway through our Integrated Operating Plan ("IOP") and driving more value from existing assets and resources by improving "fluidity"; and
- continuing to develop a dedicated, professional and knowledgeable workforce that is committed to safety and sustainable financial performance through steady improvement in profitability, increased free cash flow and a competitive return on investment.

3.0 Additional Information

Additional information, including our Consolidated Financial Statements, MD&A, Annual Information Form, press releases and other required filing documents, is available on SEDAR at www.sedar.com in Canada, on EDGAR at www.sec.gov in the US and on our website at www.cpr.ca. The aforementioned documents are issued and made available in accordance with legal requirements and are not incorporated by reference into this MD&A.

4.0 Financial Highlights

In 2009, CP adopted a new accounting standard and changed two accounting policies that were all applied retrospectively. The new accounting standard resulted in certain pre-operating period costs being expensed (discussed further in Section 13.1.1 Goodwill and Intangible Assets). In addition, CP changed its accounting policies with respect to the treatment of prior service pension costs for unionized employees, amortizing these costs over the contract period, and the recording of locomotive overhauls which are now expensed, discussed further in Section 13.1.3 Pension Prior Service Costs and Section 13.1.4 Locomotive Overhauls. All three accounting changes were applied retrospectively, as a result 2008 and 2007 financial information has been restated to conform to CP's current policies.

Financial Highlights

For the year ended December 31 (in millions, except percentages and per-share data)	2009	2008[1]			2007[1][2]
		2008[3]	DM&E[4]	Pro forma[5][6]	
Revenues	**$ 4,303.2**	$ 4,931.6	$295.6	$5,227.2	$ 4,707.6
Operating income[6]	**900.1**	1,041.7	86.2	1,127.9	1,160.8
Income, before FX on LTD and other specified items[6]	**460.3**	619.7	–	619.7	658.7
Net income	**612.4**	607.2	–	607.2	932.1
Basic earnings per share	**3.68**	3.95	–	3.95	6.05
Diluted earnings per share	**3.67**	3.91	–	3.91	5.99
Diluted earnings per share, before FX on LTD and other specified items[6]	**2.76**	3.99	–	3.99	4.23
Dividends declared per share	**0.9900**	0.9900			0.9000
Free cash[6]	**(90.1)**	230.9			303.4
Total assets at December 31	**15,531.4**	15,157.3			13,073.4
Total long-term financial liabilities at December 31[7]	**4,203.9**	4,844.5			4,267.1
Operating ratio, before other specified items[6]	**79.1%**	78.9%		78.4%	75.3%

Diluted EPS, before FX on LTD and other specified items ($)[1][6]

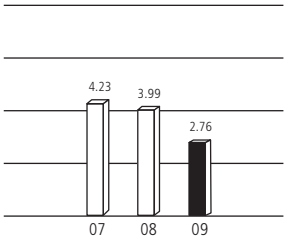

Operating ratio, before other specified items (%)[1][6]

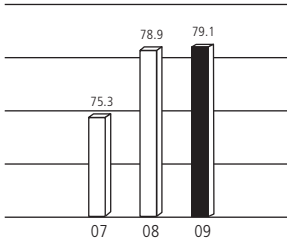

Free cash[6]
(in millions of dollars)

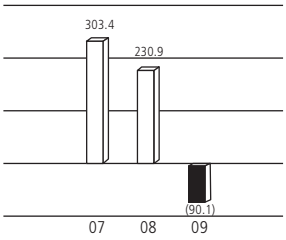

[1] Restated for the adoption of Canadian Institute of Chartered Accountants ("CICA") accounting standard 3064 and accounting policy changes related to pension prior service costs and locomotive overhauls, discussed further in Section 13.1 2009 Accounting Changes.

[2] The 2007 figures include equity income for DM&E (discussed further in Section 18.0 Acquisition) from October 30, 2007 to December 31, 2007.

[3] Revenues and Operating income include DM&E (discussed further in Section 18.0 Acquisition) from October 30, 2008 to December 31, 2008.

[4] DM&E results for the period January 1, 2008 to October 29, 2008 which under GAAP was reported as one line in equity income in DM&E.

[5] Pro forma basis redistributes DM&E equity income to a line by line consolidation of DM&E results for the year ended December 31, 2008.

[6] These earnings measures have no standardized meanings prescribed by Canadian GAAP and, therefore, are unlikely to be comparable to similar measures of other companies. These earnings measures and other specified items are described in Section 6.0 Non-GAAP Earnings. A reconciliation of income and diluted earning per shares ("EPS"), before FX on LTD and other specified items, to net income and diluted EPS, as presented in the consolidated financial statements is provided in Section 6.0 Non-GAAP Earnings. A reconciliation of free cash to GAAP cash position is provided in Section 14.4 Free Cash.

[7] Excludes future taxes of the following amounts: $2,549.5 million, $2,527.6 million and $1,619.7 million, and other non-financial long-term liabilities of $689.0 million, $706.5 million and $593.7 million for the years 2009, 2008 and 2007 respectively.

5.0 Operating Results

CP's results for the year ended December 31, 2009 are compared to the year ended December 31, 2008 on a pro forma basis. Pro forma basis is a non-GAAP measure which redistributes the DM&E operating results for the period January 1, 2008 to October 29, 2008 originally reported on an equity income basis of accounting to a line-by-line consolidation of revenues and expenses. Pro forma earnings have no standard meanings prescribed by GAAP and are unlikely to be comparable to similar measures of other companies (discussed further in Section 6.0 Non-GAAP Earnings). The results for the year ended December 31, 2008 as reported are compared to the year ended December 31, 2007.

5.1 INCOME

Operating income, a non-GAAP measure (discussed further in Section 6.0 Non-GAAP Earnings), in 2009 was $900.1 million, down $141.6 million, or 13.6%, from $1,041.7 million in 2008. On a pro forma basis, operating income in 2009 was down $227.8 million, or 20.2%, from $1,127.9 million in 2008.

The decrease in 2009 operating income was primarily due to the global recession which resulted in lower traffic volumes and reduced coal revenues as a result of regulatory rate proceedings and reduced average length of haul on export coal.

This decrease was partially offset by:

- the favourable impact of foreign exchange ("FX", discussed further in Section 25.0 Glossary of Terms);
- overall compensation and benefits declined due to lower volumes, however, the success of variable cost reductions in response to lower volumes resulted in higher incentive compensation and gainshare to employees;
- the net effect of fuel price declines; and
- lower purchased services and other expenses.

Operating income in 2008 was $1,041.7 million, down $119.1 million, or 10.3%, from $1,160.8 million in 2007.

The decrease was primarily due to:

- the weakening economy in the second half of the year, which resulted in lower volumes;
- the Canadian Transportation Agency ("Agency") decision directing a downward adjustment of the railway maximum revenue entitlement for movement of regulated grain under the Canadian Transportation Act ("CTA") which included a provision for repayment of revenues relating to grain rates (discussed further in Section 21.4.1 Regulatory Change);
- increased purchased services and other expenses, due to higher casualty related expenses despite an improved safety performance;
- higher fuel expenses driven by higher West Texas Intermediate ("WTI") prices and widening refining margins, net of fuel recoveries; and
- higher costs associated with difficult operating conditions, mainly driven by harsh weather conditions on our central and eastern network.

This decrease was partially offset by:

- improved freight rates;
- the consolidation of DM&E results from October 30, 2008 to December 31, 2008; prior to October 30, 2008 results of DM&E were recorded on an equity basis; and
- the favourable impact of the change in FX.

Net income for the year ended December 31, 2009 was $612.4 million, an increase of $5.2 million, or 0.9%, from $607.2 million in 2008. The increase in 2009 was primarily due to:

- gains on the sale of a partnership interest and significant properties (discussed further in Section 10.2 Gain on Sales of Partnership Interest and Significant Properties);
- the absence of the negative impact in 2008 on net income from the loss in fair value of our investment in Asset-backed Commercial Paper ("ABCP") compared to a small gain recorded in 2009 with respect to the replacement of long-term floating rate notes (discussed further in Section 10.3.1 Change in Estimated Fair Value of Long-term Floating Rate Notes and Asset-backed Commercial Paper); and
- income tax recoveries in 2009.

The tax recoveries reflected a one time reduction in our future income tax liability due to the Ontario government passing new legislation and the resolution of a prior year income tax matter.

The increase was mainly offset by lower operating income and a loss on termination of a lease (discussed further in Section 10.1 Loss on Termination of Lease with Shortline Railway).

Net income for the year ended December 31, 2008 was $607.2 million, down $324.9 million, or 34.9%, from $932.1 million in 2007. This decrease was primarily due to:

- lower FX gains (net of tax) on US dollar-denominated long-term debt ("LTD");
- income tax benefits recorded in 2007 due to legislation to reduce corporate income tax rates;
- lower operating income;
- loss in fair value of our investment in ABCP; and
- higher interest expense that was primarily due to the funding required for our acquisition of DM&E (discussed further in Section 14.3 Financing Activities).

The decreases in net income were partially offset by a full year of earnings from our investment in DM&E and by lower income tax expenses driven by lower operating income and lower tax rates.

5.2 DILUTED EARNINGS PER SHARE

Diluted earnings per share ("EPS") was $3.67 in 2009, a decrease of $0.24, or 6.1% from 2008. Diluted EPS, was $3.91 in 2008, a

decrease of $2.08, or 34.7%, from 2007. The decrease in 2009 was mainly due to the issuance of common shares in the first quarter as other specified items and FX gains and losses on long-term debt ("FX on LTD") mainly offset the decrease in operating income. The decrease in 2008 reflected lower net income mainly due to income tax benefits recorded in 2007 as a result of legislation to reduce corporate income tax rates, lower FX gains (net of tax) on US dollar-denominated LTD and lower operating income.

Diluted EPS, before FX on LTD and other specified items was $2.76 in 2009, a decrease of $1.23 or 30.8%, from 2008. Diluted EPS before FX on LTD and other specified items was $3.99 in 2008, a decrease of $0.24, or 5.7%, from 2007. The decrease in 2009 was mainly due to decreased operating income. The issuance of common shares in the first quarter further reduced EPS. The decrease in 2008 was mainly due to lower income before FX on LTD and other specified items, mainly caused by lower operating income. Diluted EPS before FX on LTD and other specified items is discussed further in Section 6.0 Non-GAAP Earnings.

5.3 OPERATING RATIO

The operating ratio provides the percentage of revenues used to operate the railway, and is calculated as operating expenses divided by revenues. A lower percentage normally indicates higher efficiency in the operation of the railway.

Our operating ratio, before FX on LTD and other specified items (discussed further in Section 6.2 Other Specified Items) increased to 79.1% in 2009, compared with 78.9% in 2008 and 75.3% in 2007.

2009 operating ratio of 79.1% increased by 70 basis points from 78.4% in 2008 on a pro forma basis. The increase in 2009 was primarily due to lower volumes which were partially mitigated by cost management initiatives that reduced both variable and structural costs and lower fuel prices.

Operating ratio in 2008 was 78.9% an increase when compared to 75.3% in 2007. This was due to the weakening economy in the second half of the year which resulted in lower volumes (discussed further in Section 7.0 Lines of Business) and the net impact of fuel prices.

5.4 IMPACT OF FOREIGN EXCHANGE ON EARNINGS

Fluctuations in FX affect our results because US dollar-denominated revenues and expenses are translated into Canadian dollars. US dollar-denominated revenues and expenses increase when the Canadian dollar weakens in relation to the US dollar.

In 2009 the Canadian dollar weakened against the US dollar on average by approximately 9.4% compared to 2008 and strengthened by approximately 2.8% in 2008 compared with 2007. The average FX rate for converting US dollars to Canadian dollars increased to $1.15 in 2009 from $1.05 in 2008 and decreased to $1.05 in 2008 from $1.08 in 2007.

6.0 Non-GAAP Earnings

We present non-GAAP earnings and cash flow information in this MD&A to provide a basis for evaluating underlying earnings and liquidity trends in our business that can be compared with the results of our operations in prior periods. These non-GAAP earnings exclude FX on LTD, which can be volatile and short term, and other specified items (discussed further in Section 6.2 Other Specified Items) that are not among our normal ongoing revenues and operating expenses.

The adjoining table details a reconciliation of operating income and income, before FX on LTD and other specified items, to net income, as presented in the financial statements. Free cash is calculated as cash provided by operating activities, less cash used in investing activities and dividends paid, adjusted for the acquisition of DM&E, changes in cash and cash equivalent balances resulting from foreign exchange fluctuations, and excluding changes in the accounts receivable securitization program and the initial reclassification of cash to investment in ABCP (discussed further in Section 10.3.1 Change in Estimated Fair Value of Long-term Floating Rate Notes and Asset-backed Commercial Paper). The measure is used by management to provide information with respect to investment and financing decisions and provides a comparable measure for period to period changes. Free cash is discussed further and is reconciled to the increase in cash and cash equivalents as presented in the financial statements in Section 14.4 Free Cash.

Earnings measures that exclude FX on LTD and other specified items; operating income; adjusted earnings before interest and taxes ("adjusted EBIT"); diluted EPS, before FX on LTD and other specified items; interest coverage ratio and free cash as described in this MD&A have no standardized meanings and are not defined by Canadian GAAP and, therefore, are unlikely to be comparable to similar measures presented by other companies. Operating income is calculated as revenues less operating expenses and is a common measure of profitability used by management. Income, before FX on LTD and other specified items provides management with a measure of income that can help in a multi-period assessment of long-term profitability and also allows management and other external users of our consolidated financial statements to compare our profitability on a long-term basis with that of our peers. Diluted EPS, before FX on LTD and other specified items is also referred to as adjusted diluted EPS.

CP's results for fourth-quarter and full year 2009 are compared to fourth-quarter and full year 2008 on a pro forma basis. Pro forma basis is a non-GAAP measure which redistributes the DM&E operating results originally reported on an equity income basis of accounting to a line-by-line consolidation of revenues and expenses. Doing so provides a comparable measure for period to period changes until DM&E results are fully consolidated with CP's operations for comparative periods (discussed further in Section 18.0 Acquisition).

Interest coverage ratio (discussed further in Section 14.3.2 Interest Coverage Ratio) is a metric used in assessing the Company's debt servicing capabilities, but does not have a comparable GAAP measure to which it can be reconciled. This ratio provides an indicator of our debt servicing capabilities, and how these have changed, period over period and in comparison to our peers. Interest coverage ratio reported quarterly is measured on a twelve-month rolling basis.

SUMMARIZED STATEMENT OF CONSOLIDATED INCOME

(reconciliation of non-GAAP earnings to GAAP earnings) (in millions, except diluted EPS)	For the year ended December 31					For the three months ended December 31			
	2009	2008[1]			2007[1][2]	2009	2008[1]		
		2008	DM&E[3]	Pro forma[4][5]			2008	DM&E[3]	Pro forma[4][5]
Revenues	**$4,303.2**	$4,931.6	$295.6	$5,227.2	$4,707.6	**$1,121.9**	$1,299.7	$ 34.4	$1,334.1
Operating expenses	**3,403.1**	3,889.9	209.4	4,099.3	3,546.8	**852.9**	1,012.5	17.3	1,029.8
Operating income[5]	**900.1**	1,041.7	86.2	1,127.9	1,160.8	**269.0**	287.2	17.1	304.3
Equity income in DM&E	**–**	50.9	(50.9)	–	11.2	**–**	10.4	(10.4)	–
Less:									
Other income and charges, before FX on LTD and other specified items[5]	**31.0**	22.7	(0.4)	22.3	29.6	**2.7**	8.3	–	8.3
Adjusted EBIT[5]	**869.1**	1,069.9	35.7	1,105.6	1,142.4	**266.3**	289.3	6.7	296.0
Less:									
Net interest expense	**273.1**	261.1	1.9	263.0	204.3	**62.8**	73.8	0.1	73.9
Income tax expense, before income tax on FX on LTD and other specified items[5]	**135.7**	189.1	33.8	222.9	268.7	**44.6**	49.7	6.6	56.3
Income, before FX gain (loss) on LTD and other specified items[5]	**460.3**	619.7	–	619.7	669.4	**158.9**	165.8	–	165.8
Foreign exchange gain (loss) on long-term debt									
FX on LTD – gain (loss)	**5.8**	(16.3)	–	(16.3)	169.8	**3.1**	(3.9)	–	(3.9)
Income tax recovery (expense)	**(31.6)**	38.6	–	38.6	(44.3)	**(4.5)**	26.2	–	26.2
FX on LTD, net of tax – gain (loss)	**(25.8)**	22.3	–	22.3	125.5	**(1.4)**	22.3	–	22.3
Other specified items									
Loss on termination of lease with shortline railway	**(54.5)**	–	–	–	–	**(54.5)**	–	–	–
Income tax recovery (expense)	**16.9**	–	–	–	–	**16.9**	–	–	–
Loss on termination of lease with shortline railway, net of tax	**(37.6)**	–	–	–	–	**(37.6)**	–	–	–
Gain on sales of partnership interest and significant properties	**160.3**	–	–	–	–	**–**	–	–	–
Income tax recovery (expense)	**(23.5)**	–	–	–	–	**–**	–	–	–
Gain on sales of partnership interest and significant properties, net of tax	**136.8**	–	–	–	–	**–**	–	–	–
Gain/(loss) in fair value of long-term floating rate notes/ ABCP	**6.3**	(49.4)	–	(49.4)	(21.5)	**–**	–	–	–
Income tax recovery (expense)	**(1.8)**	14.6	–	14.6	6.5	**–**	–	–	–
Gain/(loss) in fair value of long-term floating rate notes/ ABCP, net of tax	**4.5**	(34.8)	–	(34.8)	(15.0)	**–**	–	–	–
Income tax benefits due to rate reduction and settlement related to prior year	**74.2**	–	–	–	152.2	**74.2**	–	–	–
Net income	**$ 612.4**	$ 607.2	$ –	$ 607.2	$ 932.1	**$ 194.1**	$ 188.1	$ –	$ 188.1
Diluted EPS, before FX on LTD and other specified items[5]	**$ 2.76**	$ 3.99	$ –	$ 3.99	$ 4.30	**$ 0.94**	$ 1.07	$ –	$ 1.07
Diluted EPS, related to FX on LTD, net of tax[5]	**(0.15)**	0.14	–	0.14	0.81	**(0.01)**	0.14	–	0.14
Diluted EPS, related to other specified items, net of tax[5]	**1.06**	(0.22)	–	(0.22)	0.88	**0.22**	–	–	–
Diluted EPS, as determined by GAAP	**$ 3.67**	$ 3.91	$ –	$ 3.91	$ 5.99	**$ 1.15**	$ 1.21	$ –	$ 1.21

[1] Restated for the adoption of CICA accounting standard 3064 and accounting policy changes related to pension prior service costs and locomotive overhauls, discussed further in Section 13.1 2009 Accounting Changes.

[2] The 2007 figures include equity income for DM&E (discussed further in Section 18.0 Acquisition) from October 30, 2007 to December 31, 2007.

[3] DM&E results for the period January 1, 2008 to October 29, 2008 which under GAAP was reported as one line in equity income in DM&E.

[4] Pro forma basis redistributes DM&E equity income to a line by line consolidation of DM&E results for the three months ended and year ended December 31, 2008.

[5] These earnings measures have no standardized meanings prescribed by Canadian GAAP and, therefore, are unlikely to be comparable to similar measures of other companies. These earnings measures and other specified items are described in Section 6.0 Non-GAAP Earnings.

6.1 FOREIGN EXCHANGE GAINS AND LOSSES ON LONG-TERM DEBT

FX on LTD arises mainly as a result of translating US dollar-denominated debt into Canadian dollars. We calculate FX on LTD using the difference in FX rates at the beginning and at the end of each reporting period. The FX gains and losses are mainly unrealized and can only be realized when net US dollar-denominated LTD matures or is settled. Income, before FX on LTD and other specified items, is disclosed in the table above and excludes FX on LTD from our earnings in order to eliminate the impact of volatile short-term exchange rate fluctuations. A large portion of our US dollar-denominated debt is designated as a hedge of our net investments in US subsidiaries.

On a pre-tax basis, we recorded the following FX on LTD as the Canadian dollar exchange rate changed at the end of each reporting period:

- FX gain on LTD of $5.8 million in 2009, as the Canadian dollar strengthened to $1.0510 at December 31, 2009, relative to the US dollar;
- FX loss on LTD of $16.3 million in 2008, as the Canadian dollar exchange rate weakened to $1.2180 at December 31, 2008 relative to the US dollar; and
- FX gain on LTD of $169.8 million in 2007, as the Canadian dollar exchange rate strengthened to $0.9913 at December 31, 2007 relative to the US dollar from $1.1654 at the end of the previous year.

Income tax recovery (expense) related to FX on LTD is discussed further in Section 10.6 Income Taxes.

6.2 OTHER SPECIFIED ITEMS

Other specified items are material transactions that may include, but are not limited to, gains and losses on non-routine sales of assets, unusual income tax adjustments, restructuring and asset impairment charges and other items that do not typify normal business activities.

In 2009, there were four other specified items included in net income as follows:

- In the fourth quarter of 2009, we recorded a loss of $54.5 million ($37.6 million after tax) on the termination of a lease with a shortline railway (discussed further in Section 10.1 Loss on Termination of Lease with Shortline Railway).
- Also in the fourth quarter, the company recorded a benefit of $74.2 million due to a rate reduction and a settlement related to a prior year income tax matter.
- In the second and third quarters of 2009, we recorded gains of $160.3 million ($136.8 million after tax) on the sale of Windsor Station in Montreal, a land sale in Western Canada and a gain on the sale of a partnership interest in the Detroit River Tunnel Partnership ("DRTP") (discussed further in Section 10.2 Gain on Sales of Partnership Interest and Significant Properties).
- Also in the second and third quarters of 2009, the company recorded realized gains from settlement of and unrealized gains from the change in estimated fair value of long-term floating rate notes totalling $6.3 million ($4.5 million after tax) (discussed further in Section 10.3.1 Change in Estimated Fair Value of Long-term Floating Rate Notes and Asset-backed Commercial Paper).

In the first and third quarters of 2008, we recorded charges totalling $49.4 million ($34.8 million after tax) to reflect the change in the estimated fair value of ABCP (discussed further in Section 10.3.1 Change in Estimated Fair Value of Long-term Floating Rate Notes and Asset-backed Commercial Paper).

In 2007, there were three other specified items included in net income, as follows:

- In the fourth quarter of 2007, the Government of Canada substantially enacted legislation to reduce corporate income tax rates starting in 2008. We recorded a future income tax benefit of $136.2 million to reflect the positive impact of these tax rate reductions on our future income tax balance.
- In the third quarter of 2007, we recorded a charge of $21.5 million ($15.0 million after tax) to reflect the change in the estimated fair value of ABCP.
- In the second quarter of 2007, the Government of Canada substantially enacted legislation to reduce corporate income tax rates starting in 2011. We recorded a future income tax benefit of $16.0 million to reflect the benefit of these tax rate reductions on our future income tax balance.

7.0 Lines of Business

7.1 VOLUMES

Changes in freight volumes generally contribute to corresponding changes in freight revenues and certain variable expenses, such as fuel, equipment rents and crew costs.

VOLUMES

For the year ended December 31	2009	2008 As reported[1]	2008 Pro forma[2]	2007
Carloads (in thousands)				
Grain	**469.5**	382.4	460.4	385.0
Coal	**305.1**	281.0	317.7	269.1
Sulphur and fertilizers	**108.8**	191.3	195.4	209.8
Forest products	**66.8**	91.8	97.6	114.1
Industrial and consumer products	**345.9**	340.9	425.5	313.3
Automotive	**103.7**	141.3	142.0	168.5
Intermodal	**962.9**	1,216.0	1,216.0	1,238.1
Total Carloads	**2,362.7**	2,644.7	2,854.6	2,697.9
Revenue ton-miles (in millions)				
Grain	**34,838**	29,376	32,019	30,690
Coal	**16,997**	21,247	21,600	20,629
Sulphur and fertilizers	**9,362**	19,757	19,956	21,259
Forest products	**4,470**	5,677	5,927	7,559
Industrial and consumer products	**17,653**	18,296	21,364	16,987
Automotive	**1,607**	2,213	2,221	2,471
Intermodal	**23,425**	27,966	27,966	29,757
Total revenue ton-miles	**108,352**	124,532	131,053	129,352

(1) The 2008 figures include DM&E from October 30, 2008 to December 31, 2008.

(2) Pro forma basis redistributes DM&E results on a line by line consolidation for the full year 2008.

Volumes in 2009, as measured by total carloads, decreased by approximately 491,900, or 17.2%, and revenue ton-miles ("RTM") decreased by 22,701 million, or 17.3%, compared with pro forma 2008.

These decreases in carloads and RTMs in 2009 were driven by the global recession which resulted in soft market conditions and reduced customer demand lowering shipments in all but the grain line of business which benefited from a larger than normal crop.

Coal volumes measured by carloads did not decline as much as RTMs due to decreased average length of haul.

Volumes in 2008, as measured by total carloads, decreased by 53,200, or 2.0%, and RTMs decreased by 4,820 million, or 3.7%.

The decrease in carloads and RTMs in 2008 was mainly due to:

- sharply declining economic conditions in the second half of 2008;
- continued weakness in forest products due to a slowdown in the US housing market;
- declining auto sales leading to reduced shipments; and
- customer production issues resulting in reduced shipments of potash and sulphur.

This decrease was partially offset by the inclusion of DM&E volumes from October 30, 2008 to December 31, 2008, industrial product shipments, driven by economic growth in western Canada, and strong global demand for metallurgical coal resulting in increased shipments through the western corridor earlier in the year.

7.2 REVENUES

Our revenues are primarily derived from transporting freight. Other revenues are generated mainly from leasing of certain assets, switching fees, routine land sales and income from business partnerships.

REVENUES

For the year ended December 31 (in millions)	2009	2008 As reported[1]	2008 DM&E[2]	2008 Pro forma[3][4]	2007
Grain	**$ 1,129.9**	$ 970.0	$ 100.6	$ 1,070.6	$ 938.9
Coal	**443.3**	607.5	15.4	622.9	573.6
Sulphur and fertilizers	**303.5**	508.6	10.3	518.9	502.0
Forest products	**173.2**	239.3	9.7	249.0	275.8
Industrial and consumer products	**766.6**	766.1	153.7	919.8	627.9
Automotive	**228.8**	323.5	3.9	327.4	319.0
Intermodal	**1,129.9**	1,399.8	–	1,399.8	1,318.0
Total freight revenues	**4,175.2**	4,814.8	293.6	5,108.4	4,555.2
Other revenues	**128.0**	116.8	2.0	118.8	152.4
Total revenues	**$ 4,303.2**	$ 4,931.6	$ 295.6	$ 5,227.2	$ 4,707.6

(1) The 2008 figures include DM&E from October 30, 2008 to December 31, 2008.

(2) DM&E figures are for the period January 1, 2008 to October 29, 2008.

(3) Pro forma basis redistributes DM&E results on a line by line consolidation for the full year 2008.

(4) These earnings measures have no standardized meanings prescribed by Canadian GAAP and, therefore, are unlikely to be comparable to similar measures of other companies. These earnings measures and other specified items are described in Section 6.0 Non-GAAP Earnings.

In 2009, no one customer comprised more than 10% of total revenues and accounts receivable. For the year ended and as at December 31, 2008 and 2007, one customer comprised 11.3% and 11.5% of total revenues and 1.7% and 6.7% of total accounts receivable, respectively.

7.3 2009 TO 2008 COMPARATIVES

7.3.1 Freight Revenues

Freight revenues are earned from transporting bulk, merchandise and intermodal goods, and include fuel recoveries billed to our customers. Freight revenues were $4,175.2 million in 2009, a decrease of $639.6 million, or 13.3%, for the same period in 2008 on a reported basis.

The revenue table above shows freight revenue on a pro forma basis for 2008 inclusive of DM&E revenues. On a pro forma basis, freight revenues decreased by $933.2 million, or 18.3% from $5,108.4 million in 2008.

The decrease in 2009 was driven primarily by:

- lower traffic volumes due to the global recession;
- a decline in freight revenues due to fuel price changes; and
- decreased rates and reduced average length of haul on export coal as a result of regulatory rate proceedings.

The decrease was partially offset by the favourable impact of the change in foreign exchange on US dollar-denominated revenues and net increases in freight rates for all lines of business other than coal.

Revenue variances below (Sections 7.3.1.1 to 7.3.4) are compared to pro forma 2008 figures.

7.3.1.1 Fuel Cost Recovery Program

A change in fuel prices or supply disruptions may adversely impact the Company's expenses and revenues. As such, CP employs a fuel cost recovery program designed to mechanistically respond to fluctuations in fuel prices and help mitigate the financial impact of rising fuel prices. In January 2009, CP continued to modify its fuel cost recovery program utilizing a 15 day average fuel index price to further reduce fuel price volatility exposure.

7.3.1.2 Grain

Canadian grain products, consisting mainly of durum, spring wheat, barley, canola, flax, rye and oats, are primarily transported to ports for export and to Canadian and US markets for domestic consumption. US grain products mainly include durum, spring wheat, corn, soybeans and barley and are shipped from the Midwestern US to other points in the Midwest, the Pacific Northwest and northeastern US. Grain revenues in 2009 were $1,129.9 million, an increase of $59.3 million, or 5.5% compared to 2008 pro forma of $1,070.6 million.

Grain revenues increased in 2009 primarily due to:

- an increase in Canadian grain export shipments driven by strong demand and an above average 2008/2009 crop year;
- the favourable impact of the change in FX; and
- a net increase in freight rates for US and commercial grain.

The increase was partially offset by lower fuel surcharge revenues due to the change in fuel price and a negative rate decision in regulated grain.

7.3.1.3 Coal

Our Canadian coal business consists primarily of metallurgical coal transported from southeastern British Columbia ("BC") to the ports of Vancouver, BC and Thunder Bay, Ontario, and to the US Midwest. Our US coal business consists primarily of the transportation of thermal coal and petroleum coke within the US Midwest. Coal revenues in 2009 were $443.3 million, a decrease of $179.6 million, or 28.8% from pro forma 2008 of $622.9 million.

Coal revenues decreased in 2009 primarily due to:

- reduced coal shipments as a result of reduced market demand for metallurgical coal for the first three quarters of the year;
- decreased rates as a result of regulatory rate proceedings and reduced average length of haul on export coal which reduced coal revenues by approximately $63 million; and
- lower fuel surcharge revenues due to the change in fuel price.

The decrease was partially offset by new short haul US coal traffic, the favourable impact of the change in FX and increased export coal volumes in the fourth quarter driven by offshore steel demand.

7.3.1.4 Sulphur and Fertilizers

Sulphur and fertilizers include potash, chemical fertilizers and sulphur shipped mainly from western Canada to the ports of Vancouver, BC, and Portland, Oregon, and to other Canadian and US destinations. Sulphur and fertilizers revenues in 2009 were $303.5 million, a decrease of $215.4 million, or 41.5% from pro forma 2008 of $518.9 million.

Sulphur and fertilizers revenues decreased in 2009 primarily due to:

- lower export potash shipments as a result of ongoing price negotiations between producers and major buyers;
- lower domestic potash shipments as farmers deferred purchases; and
- lower fuel surcharge revenues due to the change in fuel price.

The decrease was partially offset by the favourable impact of the change in FX and a net increase in freight rates.

7.3.1.5 Forest Products

Forest products include lumber, wood pulp, paper products and panel transported from key producing areas in western Canada, Ontario and Quebec to various destinations in North America. Forest product revenues in 2009 were $173.2 million, a decrease of $75.8 million, or 30.4% from pro forma 2008 of $249.0 million.

Forest product revenues decreased in 2009 primarily due to soft market demand for lumber, panel and pulp products due to the global recession resulting in mill shutdowns and production curtailments as well as lower fuel surcharge revenues due to the change in fuel price.

The decrease was partially offset by the favourable impact of the change in FX and a net increase in freight rates.

7.3.1.6 Industrial and Consumer Products

Industrial and consumer products include chemicals, plastics, aggregates, steel, mine, ethanol, and other energy related products (other than coal) shipped throughout North America. Industrial and consumer products revenues in 2009 were $766.6 million, a decrease of $153.2 million, or 16.7% from pro forma 2008 of $919.8 million.

Industrial and consumer products revenues decreased in 2009 primarily due to reduced overall volumes primarily from our steel, building products, chemical and plastics customers due to the global recession and lower fuel surcharge revenues due to the change in fuel price.

The decrease was partially offset by the favourable impact of the change in FX, increased volumes in ethanol and other energy related products and a net increase in freight rates.

7.3.1.7 Automotive

Automotive consists primarily of the transportation of domestic, import and pre-owned vehicles as well as automotive parts from North American assembly plants and from the Port Metro Vancouver to destinations in Canada and the US. Automotive revenues in 2009 were $228.8 million, a decrease of $98.6 million, or 30.1% from pro forma 2008 of $327.4 million.

The decrease in 2009 was primarily due to a significant reduction of auto sales in the first three quarters of the year resulting in plant shutdowns and lower shipments of finished vehicles, and lower fuel surcharge revenues resulting from the change in fuel price.

This decrease was partially offset by a net increase in freight rates, the favourable impact of the change in FX and increased volumes in the fourth quarter due to increased North American vehicle sales.

7.3.1.8 Intermodal

Intermodal consists of domestic and international (import-export) container traffic. Our domestic business consists primarily of retail goods moving in containers between eastern and western Canada and to and from the US. The international business handles containers of mainly retail goods between the ports of Vancouver, Montreal, New York/New Jersey and Philadelphia and inland Canadian and US locations. Intermodal revenues in 2009 were $1,129.9 million, a decrease of $269.9 million, or 19.3% from pro forma 2008 of $1,399.8 million.

The decrease in 2009 was primarily due to the global recession which reduced import and export volumes as well as domestic intermodal container shipments and lower fuel surcharge revenues resulting from the change in fuel price.

The decrease was partially offset by a net increase in freight rates and the favourable impact of the change in FX.

7.3.2 Other Revenues

Other revenues are generated from leasing certain assets, switching fees, routine land sales and income from business partnerships.

Other revenues in 2009 were $128.0 million, an increase of $9.2 million, or 7.7% from pro forma 2008 of $118.8 million.

The increase in 2009 was mainly due to higher routine land sales, partially offset by decreases in switching due to lower volumes and miscellaneous other revenues.

7.3.3 Freight Revenue per Carload

FREIGHT REVENUE PER CARLOAD

Freight revenue per carload is the amount of freight revenue earned for every carload moved, calculated by dividing the freight revenue for a commodity by the number of carload of the commodity transported in the period.

Total freight revenue per carload in 2009 decreased by 1.3% due to lower fuel price recoveries and negative rate decisions in coal and regulated grain. This decrease was partially offset by favourable changes in FX and higher net freight rates.

For the year ended December 31	**2009**	2008 As reported[1]	2008 Pro forma[2][3]	2007
Grain	**$2,407**	$2,537	$2,325	$2,439
Coal	**1,453**	2,162	1,961	2,132
Sulphur and fertilizers	**2,790**	2,659	2,656	2,393
Forest products	**2,593**	2,607	2,551	2,417
Industrial and consumer products	**2,216**	2,247	2,162	2,004
Automotive	**2,206**	2,289	2,306	1,893
Intermodal	**1,173**	1,151	1,151	1,065
Freight revenue per carload	**$1,767**	$1,821	$1,790	$1,688

[1] The 2008 figures include DM&E from October 30, 2008 to December 31, 2008.

[2] Pro forma basis redistributes DM&E results on a line by line consolidation for the full year 2008.

[3] These earnings measures have no standardized meanings prescribed by Canadian GAAP and, therefore, are unlikely to be comparable to similar measures of other companies. These earnings measures and other specified items are described in Section 6.0 Non-GAAP Earnings.

7.3.4 Freight Revenue per Revenue Ton Mile

FREIGHT REVENUE PER REVENUE TON-MILE

Freight revenue per RTM is the amount of freight revenue earned for every RTM Moved, calculated by dividing the freight revenue for a commodity by the number of RTMs of the commodity transported in the period.

Freight revenue per RTM in 2009 decreased by 1.3% due to lower fuel price recoveries and negative rate decisions in coal and regulated grain. This decrease was partially offset by favourable changes in FX and higher net freight rates.

For the year ended December 31 (cents)	**2009**	2008 As reported[1]	2008 Pro forma[2][3]	2007
Grain	**3.24**	3.30	3.34	3.06
Coal	**2.61**	2.86	2.88	2.78
Sulphur and fertilizers	**3.24**	2.57	2.60	2.36
Forest products	**3.87**	4.22	4.20	3.65
Industrial and consumer products	**4.34**	4.19	4.31	3.70
Automotive	**14.24**	14.62	14.74	12.91
Intermodal	**4.82**	5.01	5.01	4.43
Freight revenue per revenue ton-mile	**3.85**	3.87	3.90	3.52

[1] The 2008 figures include DM&E from October 30, 2008 to December 31, 2008.

[2] Pro forma basis redistributes DM&E results on a line by line consolidation for the full year 2008.

[3] These earnings measures have no standardized meanings prescribed by Canadian GAAP and, therefore, are unlikely to be comparable to similar measures of other companies. These earnings measures and other specified items are described in Section 6.0 Non-GAAP Earnings.

7.4 2008 TO 2007 COMPARATIVES

Revenue variances below (Sections 7.4.1 to 7.4.4) compare 2008 figures as reported, with DM&E figures included on a consolidated basis beginning October 30, 2008, to 2007 figures as reported.

7.4.1 Freight Revenues

Freight revenues were $4,814.8 million in 2008, an increase of $259.6 million, or 5.7%. Freight revenues for 2008 increased mainly due to:

- the inclusion of DM&E revenues from October 30, 2008 to December 31, 2008;
- improvements in freight rates, which include our fuel recovery program; and
- overall volume growth in industrial and consumer products and coal.

The increase was partially offset by:

- the negative effect on volume of the global recession;
- the Agency decision directing a downward adjustment of the railway maximum revenue entitlement for movement of regulated grain under the CTA which included a provision for repayment of revenues relating to grain rates (discussed further in Section 21.4.1 Regulatory Change);
- weakness throughout the year in the market for forest products; and
- the unfavourable impact of the change in FX.

7.4.1.1 Grain

Grain revenues in 2008 were $970.0 million, an increase of $31.1 million, or 3.3%.

Grain revenues increased in 2008 primarily due to the inclusion of DM&E revenues from October 30, 2008 to December 31, 2008, and increased freight rates.

This increase was partially offset by a provision for the Agency decision directing a downward adjustment of the railway maximum revenue entitlement for movement of regulated grain under the CTA (discussed further in Section 21.4.1 Regulatory Change). The increase was also offset by lower shipments due to harvest delays in both the US and Canada for the 2007/2008 crop year.

7.4.1.2 Coal

Coal revenues in 2008 were $607.5 million, an increase of $33.9 million, or 5.9%.

Coal revenues increased in 2008 primarily due to:

- the strong global demand for metallurgical coal earlier in the year;
- improvements in freight rates; and
- the inclusion of DM&E revenues from October 30, 2008 to December 31, 2008.

7.4.1.3 Sulphur and Fertilizers

Sulphur and fertilizers revenues in 2008 were $508.6 million, an increase of $6.6 million, or 1.3%.

Sulphur and fertilizers revenues increased in 2008 primarily due to improvements in freight rates and the inclusion of DM&E revenues from October 30, 2008 to December 31, 2008. This increase was partially offset by decreased supply of sulphur and potash due to customer production issues and by the unfavourable impact of FX.

7.4.1.4 Forest Products

Forest products revenues in 2008 were $239.3 million, a decrease of $36.5 million, or 13.2%.

Forest products revenues declined in 2008 due to continued weak market conditions and extended plant shut downs for certain forest product customers which has led to reduced volumes. In addition revenues declined by the unfavourable impact of FX.

This decrease was partially offset by improvements in freight rates.

7.4.1.5 Industrial and Consumer Products

Industrial and consumer products revenues in 2008 were $766.1 million, an increase of $138.2 million, or 22.0%.

Industrial and consumer products revenues increased in 2008 primarily due to:

- the inclusion of DM&E revenues from October 30, 2008 to December 31, 2008;
- continued economic growth in the early part of 2008; and
- improvements in freight rates.

The increase was partially offset by the unfavourable impact of FX.

7.4.1.6 Automotive

Automotive revenues in 2008 were $323.5 million, an increase of $4.5 million, or 1.4%.

The increase in 2008 was primarily due to improvements in freight rates, partially offset by lower volumes due to soft market conditions, particularly in the US, as well as the unfavourable impact of the change in FX.

7.4.1.7 Intermodal

Intermodal revenues in 2008 were $1,399.8 million, an increase of $81.8 million, or 6.2%.

The increase in intermodal revenues in 2008 was primarily due to improvements in freight rates which were partially offset by the unfavourable impact of the change in FX.

7.4.2 Other Revenues

Other revenues in 2008 were $116.8 million, a decrease of $35.6 million or 23.4%. The decrease in Other revenues in 2008 was primarily due to lower land sales.

7.4.3 Freight Revenue per Carload

In 2008, total freight revenue per carload improved by 7.9%. This improvement is due to the increase in freight rates, which includes fuel surcharge, was partially offset by the unfavourable impact of mix and the change in FX.

7.4.4 Freight Revenue per Revenue Ton Mile

Freight revenue per RTM in 2008 increased by 9.9% compared with 2007. This improvement is due to the increase in freight rates, which includes fuel surcharge, was partially offset by the unfavourable impact of mix and the change in FX.

8.0 Performance Indicators

The indicators listed in this table are key measures of our operating performance. Definitions of these performance indicators are provided in Section 25.0 Glossary of Terms.

PERFORMANCE INDICATORS[1]

For the year ended December 31	**2009**	2008 Pro forma[2]	2007[3]
Consolidated data including DM&E			
Efficiency and other indicators			
Gross ton-miles ("GTM") of freight (millions)	**209,475**	250,991	246,322
Train miles (thousands)	**34,757**	43,243	42,804
US gallons of locomotive fuel consumed per 1,000 GTMs – freight and yard	**1.19**	1.22	1.21
Average number of active employees – expense	**13,619**	15,107	14,172
	2009	2008 As reported	2007[3]
CP data excluding DM&E			
Efficiency and other indicators			
Car miles per car day	**142.6**	143.6	142.3
Average train speed (miles per hour)	**25.5**	24.0	23.2
Average terminal dwell (hours)	**21.9**	22.3	22.2
Safety indicators			
FRA personal injuries per 200,000 employee-hours	**1.85**	1.51	2.09
FRA train accidents per million train-miles	**1.49**	1.93	2.05
DM&E data only			
Safety indicators			
FRA personal injuries per 200,000 employee-hours	**2.17**	3.50	
FRA train accidents per million train-miles	**6.78**	11.39	

(1) Certain comparative period figures have been updated to reflect new information.

(2) Pro forma basis includes DM&E results for the full year ended December 31, 2008.

(3) 2007 performance indicators exclude DM&E.

8.1 EFFICIENCY AND OTHER INDICATORS

2009 performance indicators' variances for GTMs, train miles, average number of active expense employees and US gallons of locomotive fuel consumed are compared to 2008 on a pro forma basis. 2008 performance indicator variances for the above mentioned metrics are compared to 2007 as previously reported.

GTMs for 2009 were 209,475 million which decreased by 16.5% compared with 250,991 million in the same period in 2008 on a pro forma basis. The decrease in 2009 was mainly due to the global recession which led to a decrease in traffic for all lines of business excluding grain. Fluctuations in GTMs normally drive fluctuations in certain variable costs, such as fuel and train crew costs.

GTMs for 2008 were 239,705 million, as reported in 2008, which decreased by 2.7% from 2007. The decrease in 2008 was mainly due to a reduction in the volumes of automotive, forest products, intermodal and sulphur and fertilizers, partially offset by growth in industrial and consumer products, and coal.

Train miles decreased 19.6% in 2009 compared to pro forma 2008. The decrease in 2009 was driven by management's strategy of consolidating and running longer heavier trains thereby reducing train starts while balancing productivity and maintaining reliable

service. This was further impacted by reduced volumes. As a result, overall train miles were decreased. In 2008 train miles on a non-pro forma basis decreased by 3.2% when compared to 2007. The 2008 decline was similarly driven by management's strategy of running longer heavier trains and lower volumes.

US gallons of locomotive fuel consumed per 1,000 GTMs in both freight and yard activity decreased 2.5% in 2009 from pro forma 2008 and increased by 0.8% in 2008 on an as reported basis when compared to 2007. The decrease in 2009 was primarily due to on-going fuel-conservation programs which includes the introduction of new fuel saving technology, operation of longer trains and use of a higher proportion of fuel efficient locomotives. The increase in 2008 was largely attributed to difficult winter operating conditions. The increase was partially offset by improved execution of our IOP and successful fuel-conservation efforts.

The average number of active expense employees for 2009 decreased by 1,488, or 9.8%, compared with 2008 on a pro forma basis. This decrease in 2009 was primarily due to temporary employee layoffs and position reductions made in response to the decline in traffic volumes that have accompanied the global recession. The average number of active expense employees for 2008, as reported, increased by 168 or 1.2%, compared with 2007. This increase was primarily due to the inclusion of the DM&E starting in November 2008, which added 159 to the average number of active expense employees. This increase was partially offset by employee layoffs, primarily train crews, in response to lower traffic volumes.

Car miles per car day decreased by 0.7% in 2009 to 142.6 and increased 0.9% in 2008 to 143.6. The decrease in 2009 was mainly due to lower volumes. The increase in 2008 was primarily due to improved car ordering and tactical fleet management and the IOP improvements.

Average train speed improved by 6.3% in 2009 and 3.4% in 2008. The improvement in 2009 occurred due to the reduced need for trains to pull onto sidings in order to allow another train to pass from a combination of lower volumes and execution of our long train strategy for fewer train starts. The improvement in 2008 was largely driven by continuous focus on the execution of our IOP and by the reduction in the number of trains operating on the network as a result of running longer trains and reduced volumes.

Average terminal dwell, the average time a freight car resides in a terminal, improved 1.8% in 2009 and increased 0.5% in 2008. The improvement in 2009 reflected lower volumes and the aggressive storage of surplus cars which reduced the number of active cars online and therefore, the average time freight cars spent in a terminal. The increase in 2008 was primarily due to significant flood events in the US Midwest and subsequent recovery in the third quarter of 2008 and difficult winter conditions in the first quarter of 2008.

8.2 SAFETY INDICATORS

Safety is a key priority for our management and Board of Directors. Our two main safety indicators – personal injuries and train accidents – follow strict US Federal Railroad Administration ("FRA") reporting guidelines.

The FRA personal injury rate per 200,000 employee-hours for CP, excluding DM&E was 1.85 in 2009, an increase from 1.51 in 2008 and an improvement from 2.09 in 2007. The FRA train accident rate for CP, excluding DM&E in 2009 was 1.49 accidents per million train-miles, as compared with 1.93 in 2008 and 2.05 in 2007. CP strives to continually improve its safety performance through ten key strategies and activities such as training and technology. 2009 represents CP's second lowest personal injury rate and our record lowest train accident rate.

The FRA personal injury rate per 200,000 employee-hours for the DM&E was 2.17 in 2009 compared with 3.50 in 2008. The FRA train accident rate for the DM&E was 6.78 in 2009 and 11.39 in 2008. Significant improvement has been realized driven by the implementation of our safety integration plan.

9.0 Operating Expenses

OPERATING EXPENSES

For the year ended December 31 (in millions)	2009 Expense	2009 Variance 2009 to 2008 pro forma[1][4] % Fav/(unfav)	2008[2] 2008 Expense	2008[2] DM&E[3]	2008[2] Pro forma[1][4]	2008[2] Variance 2008 to 2007 % Fav/(unfav)	2007[2][5] Expense
Compensation and benefits	**$1,275.2**	**6.9**	$1,306.1	$ 63.1	$1,369.2	(2.4)	$1,275.0
Fuel	**580.2**	**45.1**	1,005.8	51.5	1,057.3	(34.7)	746.8
Materials	**215.1**	**19.5**	252.3	14.9	267.2	–	252.2
Equipment rents	**184.8**	**5.3**	182.2	12.9	195.1	12.2	207.5
Depreciation and amortization	**488.9**	**(2.2)**	442.5	35.8	478.3	(3.5)	427.5
Purchased services and other	**658.9**	**10.0**	701.0	31.2	732.2	(9.9)	637.8
Total	**$3,403.1**	**17.0**	$3,889.9	$209.4	$4,099.3	(9.7)	$3,546.8

(1) These earnings measures have no standardized meanings as prescribed by Canadian GAAP and, therefore, are unlikely to be comparable to similar measures of other companies. These earnings measures and other specified items are described in Section 6.0 Non-GAAP Earnings.

(2) Restated for the adoption of CICA accounting standard 3064 and accounting policy changes related to pension prior service costs and locomotive overhauls, discussed further in Section 13.1 2009 Accounting Changes.

(3) Includes DM&E operating expenses for the period January 1, 2008 to October 29, 2008.

(4) Pro forma basis redistributes DM&E equity income to a line by line consolidation of DM&E results for full year 2008.

(5) The 2007 figures include equity income for DM&E (discussed further in Section 18.0 Acquisition) from October 30, 2007 to December 31, 2007.

Operating expenses were $3,403.1 million in 2009, a decrease of $696.2 million, or 17.0%, from $4,099.3 million on a pro forma basis.

Operating expenses for 2009 compared to 2008 on a pro forma basis was lower primarily due to:

- decreased volumes;
- cost management initiatives to align and size resources accordingly;
- lower fuel prices;
- lower costs from train accidents; and
- fewer locomotive overhauls.

The decrease in operating expenses was partially offset by the unfavourable impact of the change in FX.

Operating expenses were $3,889.9 million in 2008, up $343.1 million, or 9.7% from 2007. These expenses were $3,546.8 million in 2007.

Operating expenses for 2008 compared to 2007 increased primarily due to:

- higher fuel prices driven by higher WTI prices;
- higher weather related expenses as well as casualty related expenses despite improved safety performance;
- the consolidation of DM&E from October 30, 2008 to December 31, 2008; and
- increased wage rates.

The increase in operating expenses was partially offset by:

- lower variable expenses due to reduced volumes;
- the favourable impact of the change in FX; and
- lower incentive compensation.

9.1 2009 TO 2008 COMPARATIVES

Expense variances below (Sections 9.1.1 to 9.1.6) are compared to pro forma 2008 figures.

9.1.1 Compensation and Benefits

Compensation and benefits expense includes employee wages, salaries and fringe benefits. Compensation and benefits expense was $1,275.2 million in 2009, a decrease of $94.0 million, or 6.9%, from $1,369.2 million on a pro forma basis.

The decrease in 2009 was primarily due to:

- reductions in labour expenses achieved through temporary layoffs and employment reductions in response to reduced volumes;
- lower training and recertification costs associated with fewer active employees;
- lower pension and other post-employment benefits ("OPEB") expense caused by a higher discount rate and a settlement of a post-retirement benefit liability with a US national multi-employer benefit plan; and

- savings from reduced overtime hours worked as a result of cost management initiatives.

The decrease was partially offset by increased employee incentive compensation associated with a more normal bonus accrual in 2009 and increased gainshare payments to union employees, increased labour expenses due to wage rate increases and the unfavourable impact of changes in FX for 2009.

9.1.2 Fuel

Fuel expense consists of fuel used by locomotives and includes provincial, state and federal fuel taxes and the impact of our hedging program. Fuel expense was $580.2 million in 2009, a decrease of $477.1 million, or 45.1%, from $1,057.3 million on a pro forma basis.

The decrease in 2009 was primarily due to lower fuel prices and decreased consumption as a result of lower traffic volumes and improved efficiencies from ongoing fuel-conservation programs, operation of longer trains and the use of a higher proportion of fuel efficient locomotives. The decrease was partially offset by the unfavourable impact of the change in FX.

9.1.3 Materials

Materials expense includes the cost of material used for track, locomotive, freight car, and building maintenance. Materials expense was $215.1 million in 2009, a decrease of $52.1 million, or 19.5% from $267.2 million on a pro forma basis.

The decrease in 2009 was mainly due to lower locomotive overhaul costs, lower freight car and locomotive maintenance as reduced volumes resulted in a higher number of stored freight cars and locomotives; and reduced vehicle and other fuel costs. This decrease was partially offset by the unfavourable impact of the change in FX.

9.1.4 Equipment Rents

Equipment rents expense includes the cost to lease freight cars, intermodal equipment and locomotives from other companies, including railways. Equipment rents expense was $184.8 million in 2009, a decrease of $10.3 million or 5.3% from $195.1 million on a pro forma basis.

The 2009 decrease was due to lower volumes which resulted in a reduction in active cars online. This was achieved through the turn back of leased equipment which reduced freight car leasing costs, combined with a reduction in car hire payments as a result of fewer foreign cars on line. The decrease was partially offset by the unfavourable impact of the change in FX and lower car hire receipts due to lower numbers of CP cars operating on other railways.

9.1.5 Depreciation and Amortization

Depreciation and amortization expense represents the charge associated with the use of track and roadway, buildings, locomotives, freight cars and other depreciable assets. Depreciation and amortization expense was $488.9 million in 2009, an increase of $10.6 million, or 2.2%, from $478.3 million in 2008 on a pro forma basis.

The increase in 2009 was primarily due to unfavourable FX and higher depreciable assets partially offset by favourable depreciation rate changes, mainly in information systems and locomotives, and retirements of properties.

9.1.6 Purchased Services and Other

Purchased services and other expense encompasses a wide range of costs, including expenses for joint facilities, personal injuries and damage, environmental remediation, property and other taxes, contractor and consulting fees, and insurance. Purchased services and other expense was $658.9 million in 2009, a decrease of $73.3 million or 10.0% from $732.2 million on a pro forma basis.

The decrease in 2009 was due to:

- lower costs from train accidents and personal injuries;
- reduced locomotive maintenance and intermodal handling reflecting lower volumes;
- lower bad debt expense;
- reduced business travel expenses, realized through cost management initiatives; and
- lower utility costs.

The decrease was partially offset by the unfavourable impacts of the change in FX.

9.2 2008 TO 2007 COMPARATIVES

Expense variances below (Sections 9.2.1 to 9.2.6) compare 2008 figures which have been restated for the adoption of CICA accounting standard 3064 and accounting policy changes related to pension prior service costs and locomotive overhauls discussed further in Section 13.1 2009 Accounting Changes to restated 2007 figures.

9.2.1 Compensation and Benefits

Compensation and benefits expense includes employee wages, salaries and fringe benefits. Compensation and benefits expense was $1,306.1 million in 2008, an increase of $31.1 million, or 2.4%.

The increase in 2008 was primarily due to:

- increased wage rates;
- the inclusion of DM&E expenses from October 30, 2008 to December 31, 2008;
- lower settlement gains in 2008 on the release of certain post-retirement benefit liabilities due to the assumption of these obligations by a US national multi-employer benefit plan; and
- the impact of reduced costs from restructuring initiatives in the fourth quarter of 2007.

This increase was partially offset by:

- lower employee incentive compensation partially offset by losses on our total return swap ("TRS") (discussed further in Section 16.7.1 Total Return Swap);
- lower pension expenses; and
- the favourable impact of the change in FX.

9.2.2 Fuel

Fuel expense consists of the cost of fuel used by locomotives and includes provincial, state and federal fuel taxes and the impact of our hedging program. Fuel expense was $1,005.8 million in 2008, an increase of $259.0 million or 34.7%.

The increase in 2008 was primarily due to higher WTI prices. This increase was partially offset by decreased volumes in 2008. This increase was partially mitigated by the favourable impact of the change in FX. Fuel price increases were also mitigated by our fuel recovery program (the benefits of which are reflected in freight revenues).

9.2.3 Materials

Materials expense includes the cost of materials used for track, locomotive, freight car, and building maintenance. Materials expense was $252.3 million in 2008 virtually unchanged when compared to 2007.

The 2008 increase was mainly due to higher input costs including highway vehicle fuel and the consolidation of DM&E from October 30, 2008 to December 31, 2008.

This increase was offset by:

- lower car repair and train servicing costs;
- the favourable impact of the change in FX; and
- recoveries from third parties.

9.2.4 Equipment Rents

Equipment rents expense includes the cost to lease freight cars, intermodal equipment and locomotives from other companies, including railways. Equipment rents expense was $182.2 million in 2008, a decrease of $25.3 million or 12.2%.

The 2008 decrease was due to lower volumes, reducing the need to lease freight cars and locomotives, higher recoveries for CP freight cars and locomotives while in use by other railways as well as the favourable impact of the change in FX. This improvement was partially offset by higher costs from network and supply chain disruptions and traffic imbalances.

9.2.5 Depreciation and Amortization

Depreciation and amortization expense represents the charge associated with the use of track and roadway, buildings, locomotives, freight cars and other depreciable assets. Depreciation and amortization expense was $442.5 million in 2008, an increase of $15.0 million, or 3.5%, over 2007.

The increase in 2008 was primarily due to:

- additions to capital assets, especially to track;
- accelerated depreciation of software; and
- the consolidation of DM&E from October 30, 2008 to December 31, 2008 which includes amortization of fair values determined under purchase accounting.

The increase was partially offset by asset retirements.

9.2.6 Purchased Services and Other

Purchased services and other expense encompasses a wide range of costs, including expenses for joint facilities, personal injury and damage, environmental remediation, property and other taxes, contractor and consulting fees, and insurance. Purchased services and other expense was $701.0 million in 2008, an increase of $63.2 million or 9.9%.

The increase in 2008 was mainly due to:

- casualty related expenses due to the higher cost of derailments despite an improved safety performance;
- increased bad debt expense;
- the consolidation of DM&E from October 30, 2008 to December 31, 2008;
- increased consulting costs;
- higher energy costs; and
- higher locomotive overhaul costs.

The increase was partially offset by the favourable impact of the change in FX, and CP strike-related expenses in the second quarter of 2007.

10.0 Other Income Statement Items

10.1 LOSS ON TERMINATION OF LEASE WITH SHORTLINE RAILWAY

During the fourth quarter of 2009, the Company made a payment of approximately $73 million to terminate a contract with a lessee in order to cease through-train operations over the CP owned rail branchline between Smiths Falls, Ontario and Sudbury, Ontario including a settlement of a $20.6 million existing liability. The contract with the lessee provided for the operation of a minimum number of CP freight trains over the leased branchline. The loss on the transaction recognized in the fourth quarter was $54.5 million ($37.6 million after tax).

10.2 GAIN ON SALES OF PARTNERSHIP INTEREST AND SIGNIFICANT PROPERTIES

During the second quarter of 2009, the Company completed the sale of a portion of its investment in the DRTP to its existing partner, reducing the Company's ownership from 50% to 16.5%. The sale was agreed to on March 31, 2009 but was subject to regulatory approval, which was received during the second quarter. The proceeds received in the second quarter from the transaction were $110 million. Additional proceeds of $22 million are contingent on achieving certain future freight volumes through the tunnel, and have not been recognized. The gain on this transaction was $81.2 million ($68.7 million after tax). Effective April 1, 2009, the Company discontinued proportionate consolidation and is accounting for its remaining investment in the DRTP under the equity method of accounting.

During the third quarter of 2009, the Company completed two significant real estate sales, resulting in gains of $79.1 million ($68.1 million after tax).

The Company sold Windsor Station in Montreal, for proceeds of $80.0 million, including the assumption of a mortgage of $16 million due in 2011. CP will continue to occupy a portion of Windsor Station through a lease for a 10 year period after the sale. As a result, part of the transaction is considered to be a sale-leaseback and consequently a gain of $19.5 million related to this part of the transaction has been deferred and is being amortized over the remainder of the lease term.

The Company also sold land in Western Canada for transit purposes for proceeds of $43.0 million.

10.3 OTHER INCOME AND CHARGES

Other income and charges consists of amortization of the discounted portion of certain long-term accruals, gains and losses due to the impact of the change in FX on LTD and working capital, various costs related to financing, gains and losses associated with changes in the fair value of non-hedging derivative instruments and other non-operating expenditures. Other income and charges was an expense of $18.9 million in 2009, a decrease of $69.5 million or 78.6%, compared to $88.4 million in 2008. Other income and charges in 2008 was an expense of $88.4 million compared to income of $118.7 million in 2007.

The decrease in 2009 was the result of realized and unrealized gains associated with long-term floating rate notes (discussed further in Section 10.3.1 Change in Estimated Fair Value of Long-term Floating Rate Notes and Asset-backed Commercial Paper) and the gain on FX on LTD (discussed further in Section 6.1 Foreign Exchange Gains and Losses on Long-term Debt). The decrease was partially offset by the net loss recognized upon the repurchase of debt, discussed below.

During the second quarter of 2009, the Company issued US$350 million 7.25% 10-year Notes for net proceeds of $408.2 million. The proceeds from this offering contributed to the repurchase of debt with a carrying amount of $555.3 million pursuant to a tender offer for a total cost of $571.9 million. Upon repurchase of the debt a net loss of $16.6 million was recognized during the quarter in "Other income and charges" (discussed further in Section 20.1.1 Tender Offer of Debt Securities).

The increase in 2008 was primarily a result of the loss in FX on LTD as compared to a gain in 2007 and the change in fair value of Asset-backed Commercial Paper.

10.3.1 Change in Estimated Fair Value of Long-term Floating Rate Notes and Asset-backed Commercial Paper

At December 31, 2009, the Company held replacement long-term floating rate notes, with a total settlement value of $129.1 million, with a carrying value of $69.3 million. At December 31, 2008, the Company held the original ABCP issued by a number of trusts with an original cost of $143.6 million, with a carrying value of $72.7 million.

On January 12, 2009, a Canadian Court granted an order for the implementation of a restructuring plan for the ABCP and the restructuring was completed on January 21, 2009. As a result, CP received new replacement long-term floating rate notes with a total settlement value of $142.8 million.

During 2009, the Company received $0.2 million in partial redemption of its Master Asset Vehicle ("MAV") 2 Class A-1 notes and MAV 2 Class 7 Ineligible Assets ("IA") Tracking notes. These redemptions were close to the original investment value of the redeemed notes. As well, the Company received $12.3 million in partial redemption of its MAV 3 Class 9 Traditional Asset ("TA") Tracking notes and MAV 2 Class 8 IA Tracking notes representing 100% of the original investment value of the redeemed notes. Additionally, $1.2 million of MAV 2 Class 14 notes were fully redeemed with no proceeds being received by CP. As a result of the restructuring and the subsequent redemptions of notes, at December 31, 2009 the Company held replacement long-term floating rate notes with settlement values, as follows:

- $116.8 million MAV 2 notes with eligible assets represented by a combination of leveraged collateralized debt, synthetic assets and traditional securitized assets with expected repayments over approximately five to seven years:
  - Class A-1: $59.1 million
  - Class A-2: $45.9 million
  - Class B: $8.3 million
  - Class C: $3.5 million
- $12.1 million MAV 2 IA Tracking notes representing assets that have an exposure to US mortgages and sub-prime mortgages with expected repayments over approximately three and a half to 19 years:
  - Class 3: $0.5 million
  - Class 6: $5.5 million
  - Class 7: $3.4 million
  - Class 8: $0.1 million
  - Class 13: $2.6 million
- $0.2 million MAV 3 Class 9 TA Tracking notes with expected repayments over approximately seven years.

The MAV 2 Class A-1 notes have received an A rating by DBRS. However, on August 11, 2009, the rating for the MAV 2 Class A-2 notes was downgraded from A to BBB (low) under a negative watch by DBRS.

The valuation technique used by the Company to estimate the fair value of its investment in long-term floating rate notes at December 31, 2009 and ABCP at December 31, 2008, incorporates probability weighted discounted cash flows considering the best available public information regarding market conditions and other factors that a market participant would consider for such investments. The above noted redemption of notes and other minor changes in assumptions have resulted in a gain of $6.3 million (2008 – loss of $49.4 million, 2007 – loss of $21.5 million). The interest rates and maturities of the various long-term floating rate notes and ABCP, discount rates and credit losses modelled at December 31:

	2009	2008
Probability weighted average coupon interest rate	Nil%	2.2%
Weighted average discount rate	7.9%	9.1%
Expected repayments of long-term floating rate notes	Three and a half to 19 years	Five to eight years, other than certain tracking notes to be paid down on restructuring
Credit losses	MAV 2 eligible asset notes: nil to 100% MAV 2 IA Tracking notes: 25% MAV 3 Class 9 TA Tracking notes: nil%	Notes expected to be rated[1] : nil to 25% Notes not expected to be rated[2] : 25 to 100%

[1] TA Tracking, Class A-1 and Class A-2 senior notes and IA Tracking notes.

[2] Class B and Class C subordinated notes and IA Tracking notes.

The probability weighted discounted cash flows resulted in an estimated fair value of the Company's long-term floating rate notes of $69.3 million at December 31, 2009 (2008 – ABCP $72.7 million). The change in the original cost and estimated fair value of the Company's long-term floating rate notes is as follows:

(in millions of Canadian dollars)	Original cost	Estimated fair value
As at January 1, 2008	$ 143.6	$ 122.1
Change in market assumptions	–	(49.4)
As at December 31, 2008	143.6	72.7
Change due to restructuring, January 21, 2009	(0.8)	–
Redemption of notes	(13.7)	(8.0)
Accretion	–	2.9
Change in market assumptions	–	1.7
As at December 31, 2009	$ 129.1	$ 69.3

Accretion and gains and losses resulting from the redemption of notes and changes in market assumptions are reported in "Other income and charges".

Sensitivity analysis is presented below for key assumptions at December 31, 2009:

(in millions of Canadian dollars)	Change in fair value of long-term floating rate notes
Coupon interest rate	
50 basis point increase	$ 2.3
50 basis point decrease	Nil[1]
Discount rate	
50 basis point increase	$ (2.1)
50 basis point decrease	$ 2.2

[1] Notes are currently not expected to receive any coupon interest.

Continuing uncertainties regarding the value of the assets which underlie the long-term floating rate notes and the amount and timing of cash flows could give rise to a further material change in the value of the Company's investment in long-term floating rate notes which could impact the Company's near-term earnings.

10.4 EQUITY INCOME IN DAKOTA, MINNESOTA & EASTERN RAILROAD CORPORATION

Following Surface Transportation Board ("STB") approval on October 30, 2008, earnings of the DM&E are fully consolidated with CP. As a result DM&E income in 2009 is consolidated on a line by line basis and the equity income in DM&E is reported as $nil in 2009, compared to $50.9 million and $11.2 million in 2008 and 2007, respectively.

10.5 NET INTEREST EXPENSE

Net interest expense includes interest on long-term debt and capital leases, net of interest income. Net interest expense was $273.1 million in 2009, an increase of $10.1 million, or 3.8% on a pro forma

basis. The expense was $261.1 million in 2008 on a reported basis, an increase of $56.8 million, or 27.8% from 2007.

The increase in 2009 was primarily due to:

- the unfavourable impact from the change in FX on US dollar-denominated interest expense;
- interest on new debt issuances (discussed further in Section 14.3 Financing Activities); and
- lower interest income due to lower rates on deposits.

The increase was partly offset by the repurchase of debt as part of the tender offer of debt securities (discussed further in Section 20.1.1 Tender Offer of Debt Securities), lower draws on the credit facility, reduced rates on variable debt, repayment of the remaining DM&E bridge financing in December 2008 (discussed further in Section 14.3 Financing Activities) and increased capitalization of interest expense for long-term capital projects in 2009.

The increase in 2008 was primarily due to:

- financing being in place for a full 12 months to fund the acquisition of DM&E (discussed further in Section 14.3 Financing Activities);
- interest on new debt issued in May of 2008 (discussed further in Section 14.3 Financing Activities) to replace the majority of the bridge financing and permanently fund the acquisition of the DM&E; and
- the issuance of US$450 million Notes in May of 2007.

10.6 INCOME TAXES

Income tax expense was $101.5 million in 2009, a decrease of $34.4 million, or 25.3% from 2008 on a reported basis. Income tax expense was $135.9 million in 2008, a decrease of $18.4 million, or 11.9% from 2007. The decreases in 2009 and 2008 were due to lower earnings, and future tax benefits related to provincial rate reductions in 2009 and 2007 and the resolution of a prior year income tax matter in 2009.

The effective income tax rate for 2009 was 14.2%, compared with 18.3% and 14.2% for 2008 and 2007, respectively. The normalized rates (income tax rate based on income adjusted for FX on LTD, DM&E equity income (for 2007 only), and other specified items) for 2009, 2008 on a pro forma basis and 2007 were 24.7%, 25.0% and 25.8%, respectively. The changes in the normalized tax rates were primarily due to lower Canadian federal and provincial corporate income tax rates and tax planning initiatives.

We expect a normalized 2010 income tax rate of between 25% and 27%. The 2010 outlook on our normalized income tax rate is based on certain assumptions about events and developments that may or may not materialize or that may be offset entirely or partially by other events and developments (discussed further in Section 21.0 Business Risks and Enterprise Risk Management and Section 22.4 Future Income Taxes). We expect to have an increase in our cash tax payments in future years.

As part of a consolidated financing strategy, CP structures its US dollar-denominated long-term debt in different tax jurisdictions. As well, a portion of this debt is designated as a net investment hedge against net investment in US subsidiaries. As a result, the tax on foreign exchange gains and losses on long-term debt in different tax jurisdictions can vary significantly.

11.0 Quarterly Financial Data

QUARTERLY FINANCIAL DATA AS REPORTED

	2009				2008[1][2]			
For the quarter ended (in millions, except per share data)	**Dec. 31**	**Sept. 30[1]**	**Jun. 30[1]**	**Mar. 31[1]**	Dec. 31	Sept. 30	Jun. 30	Mar. 31
Total revenue	**$ 1,121.9**	**$ 1,088.2**	**$ 1,022.4**	**$ 1,070.7**	$ 1,299.7	$ 1,264.7	$ 1,220.3	$ 1,146.9
Operating income[3]	**269.0**	**268.5**	**225.7**	**136.9**	287.2	298.1	249.0	207.4
Net income	**194.1**	**201.0**	**157.2**	**60.1**	188.1	169.3	152.8	97.0
Income, before FX on LTD and other specified items[3]	**158.9**	**149.8**	**99.9**	**51.7**	165.8	183.0	148.3	122.6
Basic earnings per share	**$ 1.15**	**$ 1.20**	**$ 0.94**	**$ 0.37**	$ 1.22	$ 1.10	$ 0.99	$ 0.63
Diluted earnings per share	**1.15**	**1.19**	**0.93**	**0.37**	1.21	1.09	0.99	0.63
Diluted earnings per share, before FX on LTD and other specified items[3]	**0.94**	**0.89**	**0.59**	**0.32**	1.07	1.18	0.96	0.79

(1) Restated for the adoption of CICA accounting standard 3064 and accounting policy changes related to pension prior service costs and locomotive overhauls, discussed further in Section 13.1 2009 Accounting Changes.

(2) DM&E figures are included on a consolidated basis beginning October 30, 2008.

(3) These earnings measures have no standardized meanings prescribed by Canadian GAAP and, therefore, are unlikely to be comparable to similar measures of other companies. These earnings measures and other specified items are described in Section 6.0 Non-GAAP Earnings. A reconciliation of income and diluted EPS, before FX on LTD and other specified items, to net income and diluted EPS, as presented in the financial statements is provided in Section 6.0 Non-GAAP Earnings.

11.1 QUARTERLY TRENDS

Quarterly fluctuations in trends caused by the 2009 global recession have and will continue to cause our results and volumes to be inconsistent with the sensitivity and trends provided below. Management believes that the changes in economic conditions in 2009 will continue to affect quarterly results in 2010; the timing of a return to the sensitivity and trends discussed will depend on the recovery of the economy and our customers.

Volumes of and, therefore, revenues from certain goods are stronger during different periods of the year. First-quarter revenues can be lower mainly due to winter weather conditions, closure of the Great Lakes ports and reduced transportation of retail goods. Second- and third-quarter revenues generally improve over the first quarter as fertilizer volumes are typically highest during the second quarter and demand for construction-related goods is generally highest in the third quarter. Revenues are typically strongest in the fourth quarter, primarily as a result of the transportation of grain after the harvest, fall fertilizer programs and increased demand for retail goods moved by rail. Operating income (see Section 6.0 Non-GAAP Earnings) is also affected by seasonal fluctuations. Operating income is typically lower in the first quarter due to higher operating costs associated with winter conditions. Net income is also influenced by seasonal fluctuations in customer demand and weather-related issues.

12.0 Fourth-Quarter Summary

(in millions)	2009	2008[1] Q4 2008	2008[1] DM&E prior to consolidation[2]	2008[1] Pro forma Q4[3][4]	Q4 2009 to pro forma 2008[3][4] % favourable/ (unfavourable)
Revenues					
Grain	**$ 291.9**	$ 307.1	$12.8	$ 319.9	(8.8)
Coal	**112.1**	139.5	1.8	141.3	(20.7)
Sulphur and fertilizers	**83.7**	117.5	1.5	119.0	(29.7)
Forest products	**42.0**	57.2	0.8	58.0	(27.6)
Industrial and consumer products	**201.3**	216.0	17.0	233.0	(13.6)
Automotive	**67.7**	81.6	0.2	81.8	(17.2)
Intermodal	**292.3**	338.9	–	338.9	(13.8)
Total freight revenues	**1,091.0**	1,257.8	34.1	1,291.9	(15.6)
Other revenues	**30.9**	41.9	0.3	42.2	(26.8)
Total revenues	**1,121.9**	1,299.7	34.4	1,334.1	(15.9)
Operating expenses					
Compensation and benefits	**311.8**	350.2	6.8	357.0	12.7
Fuel	**157.5**	239.5	4.6	244.1	35.5
Materials	**41.1**	63.8	1.4	65.2	37.0
Equipment rents	**45.0**	45.8	1.3	47.1	4.5
Depreciation and amortization	**121.3**	113.7	4.2	117.9	(2.9)
Purchased services and other	**176.2**	199.5	(1.0)	198.5	11.2
Total expenses	**852.9**	1,012.5	17.3	1,029.8	17.2
Operating income[3]	**$ 269.0**	$ 287.2	$17.1	$ 304.3	(11.6)

[1] Restated for the adoption of CICA accounting standard 3064 and accounting policy changes related to pension prior service costs and locomotive overhauls, discussed further in Section 13.1 2009 Accounting Changes.

[2] These revenues, expenses and operating income include DM&E results for October 1, 2008 to October 30, 2008.

[3] These earnings measures have no standardized meanings as prescribed by Canadian GAAP and, therefore, are unlikely to be comparable to similar measures of other companies. These earnings measures and other specified items are described in Section 6.0 Non-GAAP Earnings.

[4] Pro forma basis redistributes DM&E equity income to a line by line consolidation of DM&E results for the fourth quarter of 2008.

12.1 OPERATING RESULTS

Operating income (discussed further in Section 6.0 Non-GAAP Earnings) for the three-month period ended December 31, 2009, was $269.0 million, a decrease of $35.3 million, or 11.6%, from $304.3 million, on a pro forma basis, from the same period in 2008.

The decrease in operating income was primarily due to:

- the global recession which resulted in lower traffic volumes;
- the impact of negative rate decisions in coal and regulated grain;
- the impact of the reduction in average length of haul in coal;
- an unfavourable variance in fuel recovery as compared to the fourth-quarter 2008; and
- the unfavourable impact of the change in FX.

The decrease was partially offset by the favourable impact of a number of cost initiatives and lower casualty-related and pension expenses.

We reported net income of $194.1 million in the fourth quarter of 2009, an increase of $6.0 million, or 3.2%, from $188.1 million in 2008.

The increase in net income was mainly due to income tax recoveries. This increase was partially offset by lower operating income mostly due to lower volumes as a result of the global recession as well as a loss on termination of a lease (discussed further in Section 10.1 Loss on Termination of Lease with Shortline Railway).

Diluted EPS was $1.15 in the fourth quarter of 2009, a decrease of $0.06 from $1.21 in 2008. This was primarily due to the issuance of 13.9 million common shares in the first quarter of 2009. This was partially offset by higher net income.

In the fourth quarter of 2009, GTMs were approximately 55,198 million, a decrease of 6.1%, from 58,774 million in 2008 on a pro forma basis. RTMs were approximately 28,874 million, a decrease of 5.4%, from 30,509 million in 2008 on a pro forma basis. The decrease in GTMs and RTMs was primarily due to:

- the global recession;
- reduced shipments of potash, sulphur and fertilizers caused partially by reduced demand; and
- decreased demand for lumber and panel products caused by a continued slowdown in the US housing market.

12.2 NON-GAAP EARNINGS

A discussion of non-GAAP earnings and a reconciliation of income, before FX on LTD and other specified items, to net income as presented in the consolidated financial statements for the fourth quarters of 2009 and 2008, are included in Section 6.0 Non-GAAP Earnings.

Income, before FX on LTD and other specified items, was $158.9 million in the fourth quarter of 2009, a decrease of $6.9 million from $165.8 million (discussed further in Section 6.0 Non-GAAP Earnings). The decrease was mainly driven by lower operating income. This was partially offset by lower interest expense (discussed further in Section 12.5 Other Income Statement Items) and income tax expense before FX on LTD.

12.3 REVENUES

Total revenues were $1,121.9 million in fourth-quarter 2009, a decrease of $177.8 million from $1,299.7 million as reported in 2008. On a pro forma basis total revenues decreased $212.2 million from $1,334.1 million.

This decrease was primarily driven by:

- lower overall volumes in all lines of business other than coal and automotive;
- the unfavourable impact of the change in FX;
- a decline in freight revenues due to fuel price changes; and
- the impact of negative rate decisions in coal and regulated grain.

This decrease was partially offset by a net increase in freight rates and positive traffic mix.

Variances below (Sections 12.3.1 to 12.5) are compared to pro forma 2008 figures.

12.3.1 Grain

Grain revenues in the fourth quarter of 2009 were $291.9 million, a decrease of $28.0 million from $319.9 million on a pro forma basis. This decrease was primarily driven by:

- the unfavourable impact of the change in FX;
- lower fuel surcharge revenues due to the change in fuel price; and
- negative rate decision in regulated grain.

This decrease was partially offset by increased commercial and US Grain rates and an increase in length of haul.

12.3.2 Coal

Coal revenues were $112.1 million in fourth-quarter 2009, a decrease of $29.2 million from $141.3 million on a pro forma basis. The decrease in revenues was primarily due to decreased rates as a result of regulatory rate proceedings and reduced average length of haul on export coal which reduced coal revenues by approximately $25 million and the unfavourable impact of the change in FX.

This decrease was partially offset by increased export coal shipments as a result of improved market demand for metallurgical coal and new short haul US coal traffic.

12.3.3 Sulphur and Fertilizers

Sulphur and fertilizers revenues were $83.7 million in the fourth quarter of 2009, a decrease of $35.3 million from $119.0 million on a pro forma basis. The decrease was primarily due to:

- lower export potash shipments as a result of ongoing price negotiations between producers and major buyers;
- lower domestic potash shipments as farmers deferred purchases;
- lower fuel surcharge revenues due to the change in fuel price; and
- the unfavourable impact of the change in FX.

This decrease was partially offset by a net increase in freight rates.

12.3.4 Forest Products

Forest products revenues were $42.0 million in the fourth quarter of 2009, a decrease of $16.0 million from $58.0 million on a pro forma basis. The decrease was primarily due to continued soft demand for lumber, panel and pulp products; lower fuel surcharge

revenues due to the change in fuel price and the unfavourable impact of the change in FX. This decrease was partially offset by a net increase in freight rates.

12.3.5 Industrial and Consumer Products

Industrial and consumer products revenues were $201.3 million in the fourth quarter of 2009, a decrease of $31.7 million from $233.0 million on a pro forma basis. The decrease was primarily due to lower volumes due to economic conditions particularly for steel and aggregates, the unfavourable impact of the change in FX and lower fuel surcharge revenues due to the change in fuel price. This decrease was partially offset by growth in ethanol and liquefied petroleum gas ("LPG") shipments and a net increase in freight rates.

12.3.6 Automotive

Automotive revenues were $67.7 million in fourth-quarter 2009, a decrease of $14.1 million from $81.8 million on a pro forma basis. This decrease was primarily due to the unfavourable impact of the change in FX and lower fuel surcharge revenues resulting from the change in fuel price. This decrease was partially offset by a net increase in freight rates and increased volumes due to increased North American vehicle sales.

12.3.7 Intermodal

Intermodal revenues declined in the fourth quarter of 2009 to $292.3 million, a decrease of $46.6 million from $338.9 million on a pro forma basis. The decrease was primarily due to reduced volumes due to economic conditions, lower fuel surcharge revenues resulting from the change in fuel price and by the unfavourable impact of the change in FX.

12.3.8 Other Revenues

Other revenues were $30.9 million in the fourth quarter of 2009, a decrease of $11.3 million from $42.2 million on a pro forma basis. The decrease was primarily due to lower revenues received from routine land sales, switching, leasing and the unfavourable impact of the change in FX.

12.4 OPERATING EXPENSES

Operating expenses in the fourth quarter of 2009 were $852.9 million, a decrease of $159.6 million from $1,012.5 million. On a pro forma basis, operating expenses declined $176.9 million from $1,029.8 million.

This decrease was primarily due to reductions in fuel from lower price and consumption, the favourable change in FX and reduced labour expenses in response to lower volumes.

12.4.1 Compensation and Benefits

Compensation and benefits expense in fourth-quarter 2009 was $311.8 million, a decrease of $45.2 million from $357.0 million on a pro forma basis. The decrease was primarily driven by:

- reductions in the number of employees in response to reduced volumes;
- savings from reduced overtime and increased use of accrued vacation as a result of cost management initiatives;
- lower pension expense caused by a higher discount rate; and
- the favourable impact of foreign exchange.

The decrease was partially offset by increased unionized wage rates.

12.4.2 Fuel

Fuel expense was $157.5 million in fourth-quarter 2009, a decrease of $86.6 million from $244.1 million in 2008 on a pro forma basis. The decrease was primarily due to lower fuel prices and decreased consumption as a result of lower traffic volumes and improved efficiencies from ongoing fuel-conservation programs, operation of longer trains and the use of a higher proportion of fuel efficient locomotives.

12.4.3 Materials

Materials expense was $41.1 million in the fourth quarter of 2009, a decrease of $24.1 million from $65.2 million on a pro forma basis. The decrease was primarily due to:

- fewer locomotive overhauls;
- reduced freight car and locomotive repairs and train servicing due to lower volumes;
- the favourable impact of the change in FX;
- recoveries from third parties; and
- lower vehicle and other fuel costs.

12.4.4 Equipment Rents

Equipment rents expense was $45.0 million in the fourth quarter of 2009, a decrease of $2.1 million from $47.1 million on a pro forma basis. The fourth quarter decrease was due to the favourable impact of the change in FX and lower volumes. Reduced freight car leasing costs, achieved through the turn back of leased equipment and fleet reductions, lowered the number of active cars on line. As well, fewer foreign cars on line resulted in a reduction of car hire payments. The favourable variance was partially offset by lower car hire receipts as fewer CP-owned cars were operating on other railways and lower demurrage and storage receipts due to reduced activity.

12.4.5 Depreciation and Amortization

Depreciation and amortization expense was $121.3 million in fourth-quarter 2009, an increase of $3.4 million from $117.9 million on a pro forma basis, largely due to increased depreciation rates on software and the impact of increased capital expenditures partially offset by the favourable impact of the change in FX.

12.4.6 Purchased Services and Other

Purchased services and other expense was $176.2 million in fourth-quarter 2009, a decrease of $22.3 million from $198.5 million on a pro forma basis. The decrease was mainly due to:

- lower costs from train accidents and personal injuries;
- reduced bad debt expense; and
- the favourable impact of the change in FX.

The decrease was partially offset by higher consulting costs.

12.5 OTHER INCOME STATEMENT ITEMS

In the fourth quarter of 2009 there was a gain due to FX on LTD of $3.1 million, as the Canadian dollar strengthened to $1.0510 from $1.0707 at September 30, 2009. In the fourth-quarter 2008, there was a loss due to FX on LTD of $3.9 million as a result of a weakening of the Canadian dollar against the US dollar.

Other income and charges, excluding FX on LTD, was an expense of $2.7 million in the fourth quarter of 2009, a decrease of $5.6 million from an $8.3 million expense in fourth-quarter 2008.

As a result of the approval by the STB of our acquisition of the DM&E on October 30, 2008, DM&E income in 2009 is consolidated on a line by line basis and equity income in DM&E is $nil in the fourth-quarter, compared to $10.4 million in 2008. We reported DM&E equity income from October 30, 2007 until October 29, 2008 and subsequent to this, results were consolidated on a line by line basis.

Net interest expense was $62.8 million in fourth-quarter 2009, a decrease of $11.0 million on a reported basis from $73.8 million in the same period of 2008. The decrease was primarily due to:

- the repurchase of debt as part of the Tender Offer of Debt Securities (discussed further in Section 20.1.1 Tender Offer of Debt Securities);
- the favourable impact from the change in FX on US dollar-denominated interest expense;
- lower draws on the credit facility;
- increased capitalization of interest expense for long-term capital projects in 2009; and
- interest in 2008 related to the remaining bridge financing for the DM&E repaid in December 2008.

The decrease was offset in part by interest on new debt issuance of US$350 million Notes in May 2009 and $400 million Notes in November 2009 (discussed further in Section 14.3 Financing Activities).

12.6 LIQUIDITY AND CAPITAL RESOURCES

During the fourth quarter of 2009, the company generated cash and cash equivalents of $63.2 million. During the same period of 2008 the Company generated $19.7 million of cash and cash equivalents.

The increase in cash and cash equivalents during the fourth quarter of 2009 compared to 2008 was primarily due to:

- cash provided by the issuance of $400 million 6.45% 30-year Notes and US$64.7 million of 5.57% Senior Secured Notes in 2009 compared to the repayment of the remaining bridge financing of $248.0 million originally used to finance the acquisition of DM&E and a greater reduction in short-term borrowings in 2008;
- lower additions to properties in 2009; and
- a greater improvement in working capital balances in 2009.

This increase was largely offset by:

- a $500 million voluntary prepayment to the Canadian defined benefit pension plans (discussed further in Section 20.5 Pension Plan Deficit);
- the cost of terminating a lease with a shortline railway (discussed further in Section 10.1 Loss on Termination of Lease with Shortline Railway); and
- lower proceeds from the sale and refinancing of equipment in 2009.

13.0 Changes in Accounting Policy

13.1 2009 ACCOUNTING CHANGES

13.1.1 Goodwill and Intangible Assets

In February 2008, the Canadian Institute of Chartered Accountants ("CICA") issued accounting standard Section 3064 "Goodwill and intangible assets", replacing accounting standard Section 3062 "Goodwill and other intangible assets" and accounting standard Section 3450 "Research and development costs". Section 3064, which replaces Section 3062, establishes standards for the recognition, measurement, presentation and disclosure of goodwill subsequent to its initial recognition and of intangible assets by profit-oriented enterprises. Various changes have been made to other sections of the CICA Handbook for consistency purposes. The new Section was applicable to financial statements relating to fiscal years beginning on or after October 1, 2008. Accordingly, the Company adopted the new standards for its fiscal year beginning January 1, 2009. The provisions of Section 3064 were adopted retrospectively, with restatement of prior periods.

As a result of this adoption, the Company has retroactively expensed certain expenditures related to pre-operating periods of a facility, rather than recording them as assets in "Prepaid pension costs and other assets" and "Net properties". The adoption of Section 3064 resulted in a reduction to opening retained income of $6.9 million at January 1, 2007, $7.4 million at January 1, 2008 and $10.4 million at January 1, 2009. For the year ended December 31, 2008, the adoption of this section resulted in an increase to "Purchased services and other" expense of $5.0 million (2007 - $0.8 million) and a decrease to "Income tax expense" of $2.0 million (2007 – $0.3 million). This change also resulted in a $0.02 decrease to previously reported basic and diluted earnings per share for the year ended December 31, 2008 (2007 – $nil).

13.1.2 Credit Risk and the Fair Value of Financial Assets and Financial Liabilities

On January 20, 2009 the Emerging Issues Committee ("EIC") issued a new abstract EIC 173 "Credit risk and the fair value of financial assets and financial liabilities". This abstract concludes that an entity's own credit risk and the credit risk of the counterparty should be taken into account when determining the fair value of financial assets and financial liabilities, including derivative instruments.

This abstract applies to all financial assets and liabilities measured at fair value in interim and annual financial statements for periods ending on or after January 20, 2009. The adoption of this abstract did not impact the Company's financial statements.

13.1.3 Pension Prior Service Costs

During 2009, CP changed its accounting policy for the treatment of prior service pension costs for unionized employees. In previous periods, CP had amortized these costs over the expected average remaining service period for employees. CP now amortizes these costs over the remaining contract term. The change in policy was made to provide more relevant information by amortizing the costs based on the contract term as CP generally renegotiates union contracts on a routine and consistent basis that is substantially shorter than the expected average remaining service period. The change has been accounted for on a retrospective basis. As a result of the change, the following increases (decreases) to financial statement line items occurred:

	Year ended December 31			As at December 31		As at January 1
(in millions of Canadian dollars, except per share data)	**2009**	2008	2007	**2009**	2008	2007
Compensation and benefits	**$ 0.9**	$ 0.1	$ (10.1)			
Income tax expense	**1.2**	0.3	7.3			
Net income	**$ (2.1)**	$ (0.4)	$ 2.8			
Basic earnings per share	**$ (0.01)**	$ –	$ 0.02			
Diluted earnings per share	**$ (0.01)**	$ –	$ 0.02			
Prepaid pension costs and other assets				**$ (105.1)**	$ (104.2)	$ (114.2)
Future income tax liability				**(27.0)**	(28.2)	(35.8)
Retained income				**(78.1)**	(76.0)	(78.4)

13.1.4 Locomotive Overhauls

During 2009, CP changed its accounting policy for the treatment of locomotive overhaul costs. In prior periods, CP had capitalized such costs and depreciated them over the expected economic life of the overhaul. These costs are now expensed to better represent the nature of overhaul expenditures on locomotives. This policy aligns the treatment of locomotive costs with CP's current operational practices, which have changed over recent years and gradually shifted to be more in the nature of a repair. The change has been accounted for on a retrospective basis. This policy change resulted in minor changes to the accounting process and underlying accounting systems. As a result of the change, the following increases (decreases) to financial statement line items occurred:

	Year ended December 31			As at December 31		As at January 1
(in millions of Canadian dollars, except per share data)	**2009**	2008	2007	**2009**	2008	2007
Depreciation and amortization	**$ (43.5)**	$ (48.8)	$ (44.5)			
Compensation and benefits	**0.1**	0.5	0.9			
Materials	**13.8**	35.0	36.7			
Purchased services and other	**29.3**	23.8	19.6			
Total increases	**43.2**	59.3	57.2			
Total operating expenses	**(0.3)**	10.5	12.7			
Equity income in DM&E	**–**	(0.4)	(1.1)			
Income tax expense	**1.3**	(2.6)	2.5			
Net income	**$ (1.0)**	$ (8.3)	$ (16.3)			
Basic earnings per share	**$ (0.01)**	$ (0.05)	$ (0.11)			
Diluted earnings per share	**$ (0.01)**	$ (0.05)	$ (0.11)			
Other comprehensive income	**2.1**	(2.4)	1.4			
Comprehensive income	**$ 1.1**	$ (10.7)	$ (14.9)			
Cash provided by operating activities	**$ (43.2)**	$ (59.3)	$ (57.2)			
Cash used in investing activities	**$ 43.2**	$ 59.3	$ 57.2			
Net properties				**$ (187.9)**	$ (191.8)	$ (164.4)
Future income tax liability				**(51.5)**	(54.3)	(52.6)
Accumulated other comprehensive income				**1.5**	(0.6)	0.4
Retained income				**(137.9)**	(136.9)	(112.2)

13.1.5 Financial Instruments – Disclosures

The CICA amended Section 3862 "Financial Instruments – Disclosures", to include additional disclosures about fair value measurements and to enhance liquidity risk disclosures associated with financial instruments. This standard is effective for the annual period ending December 31, 2009. The adoption of this standard did not impact the amounts reported in the Company's financial statements, however, it did result in additional disclosure.

13.2 FUTURE ACCOUNTING CHANGES

13.2.1 US GAAP / International Financial Reporting Standards ("IFRS")

On February 13, 2008, the Accounting Standards Board of the CICA confirmed that Canadian publicly accountable enterprises are required to adopt IFRS, as issued by the International Accounting Standards Board, effective January 1, 2011. In June 2008, the Canadian Securities Administrators proposed that Canadian public companies which are also Securities and Exchange Commission ("SEC") registrants, such as CP, could retain the option, currently available to them, to prepare their financial statements under US GAAP instead of IFRS. CP has determined that, commencing on January 1, 2010, it will adopt US GAAP for its financial reporting, which will be consistent with current reporting of all other North American Class I railways. As a result, CP will not be adopting IFRS in 2011.

Our adoption of US GAAP is now complete and in effect for 2010. Changes to our underlying accounting systems have been made and the necessary accounting entries to record 2010 opening US GAAP balances in our accounting records have been made. Additionally we will be preparing US GAAP 2009 annual financial statements and US GAAP MD&A to provide users of our financial information with additional clarity as to our financial results and financial position for the years ending 2009, 2008 and 2007 prepared retrospectively in accordance with US GAAP. We will also be providing further US GAAP information on our website by the end of March 2010.

Accounting staff at CP have also received externally delivered US GAAP accounting training and training on required changes to specific accounting systems.

Our first financial statements to be prepared using US GAAP will be our first quarter 2010 interim statements. These statements will include a reconciliation from US GAAP to Canadian GAAP. We are currently finalizing the necessary disclosures which will be required under US GAAP.

13.2.2 Business combinations, consolidated financial statements and non-controlling interests

In January 2009, the CICA issued three new standards.

Business combinations, Section 1582

This section replaces the former Section 1581 "Business combinations" and provides the Canadian equivalent to IFRS 3 "Business Combinations" (January 2008). The new standard requires the acquiring entity in a business combination to recognize most of the assets acquired and liabilities assumed in the transaction at fair value including contingent assets and liabilities; and recognize and measure the goodwill acquired in the business combination or a gain from a bargain purchase. Acquisition-related costs are to be expensed.

Consolidated financial statements, Section 1601 and Non-controlling interests, Section 1602

These two sections replace Section 1600 "Consolidated financial statements". Section 1601 "Consolidated financial statements" carries forward guidance from Section 1600 "Consolidated financial statements" with the exception of non-controlling interests which are addressed in a separate section. Section 1602 "Non-controlling interests" requires the Company to report non-controlling interests within equity, separately from the equity of the owners of the parent, and transactions between an entity and non-controlling interests as equity transactions.

All three standards are effective January 1, 2011, however, the Company will not adopt these standards given the decision to report under US GAAP effective January 1, 2010.

14.0 Liquidity and Capital Resources

We believe adequate amounts of cash and cash equivalents are available in the normal course of business to provide for ongoing operations, including the obligations identified in the tables in Section 19.0 Contractual Commitments and Section 20.4 Certain Other Financial Commitments. We are not aware of any trends or expected fluctuations in our liquidity that would create any deficiencies. Liquidity risk is discussed in Section 21.3 Liquidity. The following discussion of operating, investing and financing activities describes our indicators of liquidity and capital resources.

14.1 OPERATING ACTIVITIES

Cash provided by operating activities was $551.5 million in 2009, a decrease of $468.2 million from $1,019.7 million in the same period of 2008. Cash provided by operating activities in 2008 decreased $256.4 million from $1,276.3 million in 2007.

The decrease in 2009 was primarily due to:

- a $500 million voluntary prepayment to the Canadian defined benefit pension plans (discussed further in Section 20.5 Pension Plan Deficit);
- lower operating income (discussed further in Section 6.0 Non-GAAP Earnings);
- the cost of terminating a lease with a shortline railway (discussed further in Section 10.1 Loss on Termination of Lease with Shortline Railway); and
- the partial unwind of the Total Return Swap ("TRS") (discussed further in Section 16.7.1 Total Return Swap).

This decrease was offset in part by:

- the termination of our $120.0 million accounts receivable securitization program in 2008 (discussed further in Section 17.1 Sale of Accounts Receivable);
- the favourable improvement in working capital balances; and
- cash tax recoveries in 2009 compared to payments in 2008.

The decrease in 2008 was primarily due to the impact to working capital from the termination of our accounts receivable securitization program, lower earnings, higher income tax payments and increased pension contributions.

14.2 INVESTING ACTIVITIES

Cash used in investing activities was $458.7 million in 2009, a decrease of $338.0 million from 2008. Cash used in investing activities was $796.7 million in 2008, a decrease of $1,660.4 million from $2,457.1 million in 2007.

The decrease in 2009 was largely due to proceeds on the sales of a partnership interest and significant properties (discussed further in Section 10.2 Gain on Sales of Partnership Interest and Significant Properties) and lower additions to properties in 2009.

Cash used in investing activities was lower in 2008, primarily due to the acquisition of DM&E in 2007 as well as the reclassification of ABCP from Cash and cash equivalents to Investments in 2007.

Additions to properties ("capital programs") in 2010 are expected to be in the range of $680 million to $730 million (Canadian GAAP basis). Planned capital programs include approximately $585 million for the renewal of rail, ballast, crossties, automated signal systems, buildings and equipment and $115 million for information technology, positive train control, efficiency and other opportunity capital projects. The capital programs plan for 2010 reflects CP's change in accounting policy to expense locomotive overhauls previously capitalized.

CAPITAL PROGRAMS
(in millions, except for miles and crossties)

	2009	2008[1]	2007[1]
Additions to properties[2]			
Track and roadway	**$ 534.9**	$ 680.4	$ 543.7
Buildings	**(10.9)**	14.9	19.9
Rolling stock	**105.3**	107.8	161.1
Information systems	**44.5**	64.5	51.3
Other	**60.3**	73.0	84.6
Total – accrued	**734.1**	940.6	860.6
Less:			
Assets acquired through capital leases	**0.8**	79.5	12.1
Other non-cash transactions	**10.9**	28.2	12.5
Cash invested in additions to properties (as per Consolidated Statement of Cash Flows)	**$ 722.4**	$ 832.9	$ 836.0
Track installation capital programs[3]			
Track miles of rail laid (miles)	**395**	408	349
Track miles of rail capacity expansion (miles)	**1**	31	18
Crossties installed (thousands)	**870**	1,065	1,037

(1) Restated for the adoption accounting policy changes related to locomotive overhauls, discussed further in Section 13.1 2009 Accounting Changes.

(2) The figures include the results of the DM&E on a fully consolidated basis for the periods after October 30, 2008.

(3) The 2008 and 2007 figures exclude DM&E data.

We intend to finance capital expenditures with available cash from operations but may partially finance these expenditures with new debt, capital leases and temporary draws on our credit facility and equity. Our decisions on funding equipment acquisitions will be influenced by such factors as the need to keep our capital structure within debt covenants and maintain financial ratios that enable CP to manage its long-term financing structure to maintain its investment grade rating, as well as the amount of cash flow we believe can be generated from operations and the prevailing capital market conditions.

14.3 FINANCING ACTIVITIES

Cash provided by financing activities was $488.7 million in 2009 as compared to cash used in financing activities of $511.5 million in 2008 and cash provided by financing activities in 2007 of $1,453.5 million.

Cash provided by financing activities in 2009 was mainly due to the issuance of:

- common shares for net cash proceeds of approximately $489 million (discussed further in Section 20.1.2 Issuance of Common Shares);
- US$350 million of 7.25% 10-year Notes for net proceeds of $408.2 million;
- $400 million 6.45% 30-year Notes for net proceeds of $397.8 million; and
- US$64.7 million of 5.57% Senior Secured Notes for net proceeds of $66.7 million.

These proceeds were partially offset by the tendering of debt for a total cost of $571.9 million (discussed further in Section 20.1.1 Tender Offer of Debt Securities), the repayment of short-term borrowings and the payments of dividends.

Cash used in financing activities in 2008 was mainly due to the repayment of the bridge financing originally used to finance the acquisition of DM&E, dividends paid and the reduction in short-term borrowings. These uses were largely offset by the following debt issuances to permanently finance the acquisition of DM&E and replace the bridge financing:

- US$400 million of 5.75% five-year Notes;
- US$300 million of 6.50% 10-year Notes; and
- $375 million of 6.25% 10-year Medium Term Notes.

Cash provided by financing activities in 2007 was mainly due to:

- the US$1.27 billion bridge financing to fund the acquisition of DM&E;
- the issuance of US$450 million of 5.95% 30-year notes, for net proceeds of $485.1 million; and
- short-term borrowings of $229.7 million.

These sources of financing were partially offset by the repayment of two debt instruments, a $143.0 million secured equipment loan and a $19.0 million obligation under a capital lease, as well as by dividends paid and the purchase of shares through the Company's share repurchase program.

The Company has available, as sources of financing, unused credit facilities of up to $745 million.

14.3.1 Debt to Total Capitalization

During 2009, the Company changed one of its measures used to monitor capital from net-debt to net-debt-plus-equity ratio to debt to total capitalization to better align with a more common convention.

At December 31, 2009, our debt to total capitalization decreased to 40.1%, compared with 45.8% at December 31, 2008 and 45.6% at December 31, 2007.

The decrease in 2009 was primarily due to:

- the proceeds raised from CP's equity issue (discussed further in Section 20.1.2 Issuance of Common Shares);
- the tendering of debt (discussed further in Section 20.1.1 Tender Offer of Debt Securities);
- an increase in equity driven by earnings;
- the impact of the stronger Canadian dollar on US dollar-denominated debt at December 31, 2009, compared with December 31, 2008; and
- the repayment of short-term borrowings.

This was partially offset by the issuance of long-term debt.

The increase in 2008 was primarily due to the impact of the weaker Canadian dollar on US dollar-denominated debt at December 31, 2008, compared with December 31, 2007. This was largely offset by an increase in equity driven by earnings and the net repayment of short-term borrowings and long-term debt.

Debt to total capitalization is the sum of long-term debt, long-term debt maturing within one year and short-term borrowing, divided by debt plus total shareholders' equity as presented on our Consolidated Balance Sheet.

14.3.2 Interest Coverage Ratio

At December 31, 2009, our interest coverage ratio (discussed further in Section 6.0 Non-GAAP Earnings) decreased to 3.2, compared with 4.1 and 5.6 for the same period in 2008 and 2007 respectively. This decrease in 2009 was primarily due to a year-over-year reduction in adjusted EBIT (discussed further in Section 6.0 Non-GAAP Earnings). The interest coverage ratio for the period is below the management target of no less than 4.0; however, the Company believes this is a temporary consequence of the global recession that occurred during the period. The Company expects the ratio to improve above the target as traffic volumes recover. The Company remains in compliance with all external covenant requirements.

The decrease in 2008 was primarily due to higher interest expense as a result of an increase in debt to fund the acquisition of DM&E (discussed further in Section 14.3 Financing Activities).

Interest coverage ratio is measured, on a rolling twelve month basis, as adjusted EBIT divided by net interest expense. This ratio excludes changes in the estimated fair value of the Company's investment in long-term floating rate notes/ABCP, the gain on sales of partnership interest and significant properties and the loss on termination of a lease with a shortline railway as these are not in the normal course of business and foreign exchange gains and losses on long-term debt, which can be volatile and short term. The interest coverage ratio and adjusted EBIT are non-GAAP measures.

14.3.3 Security Ratings

Our unsecured long-term debt securities are currently rated "Baa3", "BBB" and "BBB" by Moody's Investors Service, Inc. ("Moody's"), Standard and Poor's Corporation ("S&P") and DBRS, respectively. The S&P rating has a negative outlook, while the Moody's and DBRS ratings have a stable outlook. Our ratings have remained unchanged throughout 2009 with the exception of DBRS which improved from a negative to stable outlook.

14.4 FREE CASH

CALCULATION OF FREE CASH

(reconciliation of free cash to GAAP cash position) For the year ended December 31 (in millions)	**2009**	2008[1][2]	2007[2]
Cash provided by operating activities	**$ 551.5**	$ 1,019.7	$ 1,276.3
Cash used in investing activities	**(458.7)**	(796.7)	(2,457.1)
Add back reclassification of ABCP[3]	**–**	–	143.6
Dividends paid	**(162.9)**	(148.7)	(133.1)
Add back investment in DM&E[4]	**–**	8.6	1,492.6
Termination of accounts receivable securitization program[5]	**–**	120.0	–
Foreign exchange effect on cash and cash equivalents[2]	**(20.0)**	28.0	(18.9)
Free cash[6]	**(90.1)**	230.9	303.4
Cash provided by (used in) financing activities, excluding dividend payment	**651.6**	(362.8)	1,586.6
Reclassification of ABCP[3]	**–**	–	(143.6)
Investment in DM&E[4]	**–**	(8.6)	(1,492.6)
Accounts receivable securitization program[5]	**–**	(120.0)	–
Increase/(decrease) in cash, as shown on the Consolidated Statement of Cash Flows	**561.5**	(260.5)	253.8
Net cash and cash equivalents at beginning of year	**117.6**	378.1	124.3
Net cash and cash equivalents at end of year	**$ 679.1**	$ 117.6	$ 378.1

(1) The 2008 figures include DM&E consolidated from October 30, 2008 to December 31, 2008.

(2) Certain figures, previously reported for 2008 and 2007 have been restated for changes in accounting policy as discussed in Section 13.1 2009 Accounting Changes.

(3) The reclassification of ABCP is discussed further in Section 10.3.1 Change in Estimated Fair Value of Long-term Floating Rate Notes and Asset-backed Commercial Paper.

(4) The acquisition of DM&E in 2007 discussed further in Section 18.0 Acquisition.

(5) The termination of accounts receivable securitization program is discussed further in Section 17.1 Sale of Accounts Receivable.

(6) Free cash has no standardized meaning prescribed by Canadian GAAP and, therefore, is unlikely to be comparable to similar measures of other companies. Free cash is discussed further in Section 6.0 Non-GAAP Earnings.

Free cash is a non-GAAP measure that management considers to be an indicator of liquidity. Free cash is calculated as cash provided by operating activities, less cash used in investing activities and dividends paid, adjusted for changes in cash and cash equivalent balances resulting from foreign exchange fluctuations and excludes the acquisition of DM&E, changes in accounts receivable securitization program and the initial reclassification of ABCP to investments. Free cash is adjusted for the DM&E acquisition and the reclassification of ABCP as these are not indicative of normal day-to-day investments in the Company's asset base. The securitization of accounts receivable is a financing-type transaction, which is excluded to clarify the nature of the use of free cash.

There was negative free cash of $90.1 million in 2009, compared with positive free cash of $230.9 million in 2008 and $303.4 million in 2007.

The decrease in 2009 was primarily due to:

- a $500 million voluntary prepayment to the Canadian defined benefit pension plans (discussed further in Section 20.5 Pension Plan Deficit);
- lower operating income (discussed further in Section 6.0 Non-GAAP Earnings);
- the cost of terminating a contract with a shortline railway (discussed further in Section 10.1 Loss on Termination of Lease with Shortline Railway); and
- the unfavourable impact of foreign exchange fluctuations on US dollar-denominated cash.

This decrease was offset in part by:

- proceeds on the sales of a partnership interest and significant properties;
- lower capital additions; and
- the favourable improvement in working capital balances and cash tax recoveries in 2009 compared to payments in 2008.

The decrease in free cash in 2008 compared to 2007 was primarily due to a decrease in cash generated by operating activities (as discussed in Section 14.1 Operating Activities), partially offset by the favourable impact of FX fluctuations on US dollar-denominated cash.

15.0 Balance Sheet

15.1 ASSETS

Assets totalled $15,531.4 million at December 31, 2009, compared with $15,157.3 million at December 31, 2008 and $13,073.4 million at December 31, 2007. The increase in assets in 2009 was mainly due to cash provided by the monetization of various assets and investments (discussed further in Section 10.2 Gain on Sales of Partnership Interest and Significant Properties), proceeds from the issuance of common shares (discussed further in Section 20.1.2 Issuance of Common Shares) and certain debt issuances. Adequate cash balances allowed CP to increase funding to the Company's defined benefit pension plan (discussed further in Section 20.5 Pension Plan Deficit) as reflected in the increase in prepaid pension costs and other assets.

The increase in assets in 2009 was partially offset by the negative impact of a weaker US dollar and reduction of working capital accounts which resulted from changes in business practices and reduced activity as a result of the global recession.

The increase in assets in 2008 reflects the consolidation of the DM&E assets and the positive impact of a stronger US dollar. Previously, DM&E assets, net of liabilities, were recorded as investments.

15.2 TOTAL LIABILITIES

Our combined short-term and long-term liabilities were $8,825.4 million at December 31, 2009 compared with $9,387.9 million at December 31, 2008 and $7,825.3 million at December 31, 2007. This decrease in total liabilities in 2009 reflected the strengthening of the Canadian dollar and its favourable impact on the US dollar-denominated liabilities, as well as lower business activities as a result of the global recession which reduced accounts payable.

The increase in liabilities in 2008 reflects the consolidation of DM&E's liabilities, and the negative impact of a stronger US dollar. The increase was partially offset by the net effect of the repayment of bridge financing which was replaced by the issuance of long-term notes.

15.3 EQUITY

At December 31, 2009, our Consolidated Balance Sheet reflected $6,706.0 million in equity, compared with an equity balance of $5,769.4 million at December 31, 2008 and $5,248.1 million at December 31, 2007. The increase in equity in 2009 was primarily due to the issuance of 13.9 million common shares in February 2009 (discussed further in Section 20.1.2 Issuance of Common Shares) and net income, in excess of dividends. This increase was partially offset by a reduction in Accumulated Other Comprehensive Income ("AOCI").

The increase in equity in 2008 was primarily due to net income, in excess of dividends; growth in AOCI and the issuance of Common Shares for stock options exercised.

15.4 SHARE CAPITAL

CP is authorized to issue an unlimited number of Common Shares, an unlimited number of First Preferred Shares and an unlimited number of Second Preferred Shares. At February 25, 2010, 168,558,393 Common Shares and no Preferred Shares were issued and outstanding.

On February 3, 2009, CP filed a final prospectus offering for sale to the public, primarily in Canada and the US, of up to 13,900,000 CP common shares at a price of $36.75 Canadian per share. The offering closed on February 11, 2009 at which time CP issued 13,900,000 common shares, including 1,300,000 common shares issued under the provisions of an over-allotment option available to the underwriters of the common share offering, for gross proceeds of approximately $511 million (proceeds net of fees and issue costs and including future taxes are $495.2 million) (discussed further in Section 20.1.2 Issuance of Common Shares).

In addition, CP has a Management Stock Option Incentive Plan ("MSOIP") under which key officers and employees are granted options to purchase CP shares. Each option granted can be exercised for one Common Share. At February 25, 2010, 8.1 million options were outstanding under our MSOIP and Directors' Stock Option Plan, and 1.1 million Common Shares have been reserved for issuance of future options.

15.5 DIVIDENDS

Dividends declared by the Board of Directors in the last three years are as follows:

Dividend Amount	Record Date	Payment Date
$0.2250	March 30, 2007	April 30, 2007
$0.2250	June 29, 2007	July 30, 2007
$0.2250	September 28, 2007	October 29, 2007
$0.2250	December 28, 2007	January 28, 2008
$0.2475	March 28, 2008	April 28, 2008
$0.2475	June 27, 2008	July 28, 2008
$0.2475	September 26, 2008	October 27, 2008
$0.2475	December 24, 2008	January 26, 2009
$0.2475	March 27, 2009	April 27, 2009
$0.2475	June 26, 2009	July 27, 2009
$0.2475	September 25, 2009	October 26, 2009
$0.2475	December 31, 2009	January 25, 2010
$0.2475	March 26, 2010	April 26, 2010

16.0 Financial Instruments

16.1 FAIR VALUE OF FINANCIAL INSTRUMENTS

The Company categorizes its financial assets and liabilities measured at fair value into one of three different levels depending on the observability of the inputs employed in the measurement.

- Level 1: This category includes assets and liabilities measured at fair value based on unadjusted quoted prices for identical assets and liabilities in active markets that are accessible at the measurement date. An active market for an asset or liability is considered to be a market where transactions occur with sufficient frequency and volume to provide pricing information on an ongoing basis.
- Level 2: This category includes valuations determined using directly or indirectly observable inputs other than quoted prices included within Level 1. Derivative instruments in this category are valued using models or other industry standard valuation techniques derived from observable market data. Such valuation techniques include inputs such as quoted forward prices, time value, volatility factors and broker quotes that can be observed or corroborated in the market. Instruments valued using inputs in this category include non exchange traded derivatives such as over the counter financial forward contracts, as well as swaps for which observable inputs can be obtained for the entire duration of the derivative instrument.
- Level 3: This category includes valuations based on inputs which are less observable, unavailable or where the observable data does not support a significant portion of the instruments' fair value. Generally, Level 3 valuations are longer dated transactions, occur in less active markets, occur at locations where pricing information is not available, or have no binding broker quote to support Level 2 classifications.

When possible, the estimated fair value is based on quoted market prices, and, if not available, estimates from third party brokers. For non exchange traded derivatives classified in Levels 2 and 3, the Company uses standard valuation techniques to calculate fair value. These methods include discounted mark to market for forwards, futures and swaps. Primary inputs to these techniques include observable market prices (interest, foreign exchange and commodity) and volatility, depending on the type of derivative and nature of the underlying risk. The Company uses inputs and data used by willing market participants when valuing derivatives and considers its own credit default swap spread as well as those of its counterparties in its determination of fair value. Wherever possible the Company uses observable inputs. A detailed analysis of the techniques used to value the Company's long-term floating rate notes are discussed further in Section 10.3.1 Change in Estimated Fair Value of Long-term Floating Rate Notes and Asset-backed Commercial Paper.

The following table presents the Company's fair value hierarchy for those assets and liabilities measured at fair value on a recurring basis, all of which are held for trading, as at December 31, 2009.

(in millions of Canadian dollars)	Level 1	Level 2	Level 3	Total
Financial assets				
Current derivative assets	$ –	$ 2.5	$ –	$ 2.5
Long-term derivative assets	–	0.2	–	0.2
Investments	–	–	69.3	69.3
Financial liabilities				
Current derivative liabilities	–	18.2	–	18.2

16.1.1 Carrying Value and Fair Value of Financial Instruments

The carrying values of financial instruments equal or approximate their fair values with the exception of long-term debt which has a carrying value of $4,494.8 million at December 31, 2009 (December 31, 2008 – $4,729.8 million) and a fair value of approximately $4,824.9 million at December 31, 2009 (December 31, 2008 – $4,198.9 million). The fair value of publicly traded long-term debt is determined based on market prices at December 31, 2009 and December 31, 2008, respectively.

16.2 DERIVATIVE FINANCIAL INSTRUMENTS

Our policy with respect to using derivative financial instruments is to selectively reduce volatility associated with fluctuations in interest rates, FX rates, the price of fuel and stock-based compensation expense management. Where derivatives are designated as hedging instruments, we document the relationship between the hedging instruments and their associated hedged items, as well as the risk management objective and strategy for the use of the hedging instruments. This documentation includes linking the derivatives that are designated as fair value or cash flow hedges to specific assets or liabilities on our Consolidated Balance Sheet, commitments or forecasted transactions. At the time a derivative contract is entered into, and at least quarterly, we assess whether the derivative item is effective in offsetting the changes in fair value or cash flows of the hedged items. The derivative qualifies for hedge accounting treatment if it is effective in substantially mitigating the risk it was designed to address.

It is not our intent to use financial derivatives or commodity instruments for trading or speculative purposes.

16.3 CREDIT RISK

We are exposed to counterparty credit risk in the event of non-performance by counterparties. In order to mitigate this risk, limits are set by our Board of Directors for counterparty transactions and we conduct regular monitoring of the credit standing of the counterparties or their guarantors. We do not anticipate any losses with respect to counterparty credit risk.

16.4 INTEREST RATE MANAGEMENT

To manage interest rate exposure, the Company accesses diverse sources of financing and manages borrowings in line with a targeted range of capital structure, debt ratings, liquidity needs, maturity schedule, and currency and interest rate profiles. In anticipation of future debt issuance, the Company may enter into forward rate agreements such as treasury rate locks, bond forwards or forward starting swaps to substantially lock in all or a portion of the effective future interest expense. The Company may also enter into swap agreements to manage the mix of fixed and floating rate debt.

16.4.1 Interest Rate Swaps

In 2003 and 2004, we entered into fixed-to-floating interest rate swap agreements totalling US$200 million which converted a portion of our US$400 million 6.250% Notes to floating-rate debt. We paid an average floating rate that fluctuated quarterly based on LIBOR. These swaps were set to expire in 2011 and were accounted for as a fair value hedge.

During the second quarter of 2009, CP unwound its outstanding interest rate swap agreements for a gain of $16.8 million. The gain was deferred as a fair value adjustment to the underlying debt that was hedged and will be amortized to "Net interest expense" until such time that the 6.250% Notes are repaid.

Subsequent to the unwinding of this swap a portion of the underlying 6.250% Notes were repurchased in the second quarter and, as a result, a pro rata share of the fair value adjustment amounting to a $6.5 million gain was recognized immediately to "Other income and charges" as part of the net loss on repurchase of debt (discussed further in Section 20.1.1 – Tender Offer of Debt Securities). For the remainder of 2009 the Company then amortized $2.4 million of the deferred gain to "Net interest expense".

Accounting for these Notes at the floating interest rate, prior to the unwind, decreased "Net interest expense" on our Consolidated Statement of Income by $3.1 million in 2009 (2008 – $3.1 million).

At December 31, 2009, the Company had no outstanding interest rate swaps. At December 31, 2008, an unrealized gain, derived from the fair value of the swaps, of $20.9 million was reflected in "Other" current assets and "Prepaid pension costs and other assets" with the offset reflected in "Long-term debt" on our Consolidated Balance Sheet. The fair value was calculated utilizing swap, currency and basis-spread curves from Bloomberg. These swaps were fully effective.

16.4.2 Interest and Treasury Rate Locks

At December 31, 2009, the Company had net unamortized losses related to interest rate locks settled in previous years totalling $23.9 million, which are reflected in AOCI on the Consolidated Balance Sheet.

This amount is composed of various unamortized gains and losses related to specific debts. These unamortized gains and losses are amortized to "Net interest expense" in the period that interest coupon payments are made on the related debts. The amortization of these gains and losses resulted in an increase in "Net interest expense" and "Other comprehensive income" of $3.5 million in 2009 (2008 – $3.3 million).

16.5 FOREIGN EXCHANGE MANAGEMENT

We enter into foreign exchange risk management transactions primarily to manage fluctuations in the exchange rate between Canadian and US currencies. From time to time, we use foreign exchange forward contracts as part of our foreign exchange risk management strategy. We have designated a portion of our US dollar-denominated long-term debt as a hedge of our net investment in self-sustaining foreign subsidiaries.

16.5.1 Foreign Exchange Forward on Long-term Debt

In 2007, the Company entered into a FX forward to fix the exchange rate on US$400 million 6.250% Notes due 2011. This derivative guaranteed the amount of Canadian dollars that the Company will repay when its US$400 million 6.250% Notes mature in October 2011. During 2009, CP unwound and settled US$330 million of the US$400 million currency forward for total proceeds of $34.1 million. The Company recorded a net foreign exchange loss on long-term debt of $23.0 million in 2009 (2008 – unrealized gain of $73.0 million) in "Other income and charges". The amount recorded in 2009 was inclusive of both realized and unrealized losses.

At December 31, 2009, the unrealized gain on the remaining currency forward of $0.2 million (December 31, 2008 – $57.3 million) was included in "Prepaid pension costs and other assets".

16.6 FUEL PRICE MANAGEMENT

The Company is exposed to commodity risk related to purchases of diesel fuel and the potential reduction in net income due to increases in the price of diesel. Because fuel expense constitutes a large portion of the Company's operating costs, volatility in diesel fuel prices can have a significant impact on the Company's income. Items affecting volatility in diesel prices include, but are not limited to, fluctuations in world markets for crude oil and distillate fuels, which can be affected by supply disruptions and geopolitical events.

The impact of variable fuel expense is mitigated substantially through fuel cost recovery programs which apportion incremental changes in fuel prices to shippers through price indices, tariffs, and by contract, within agreed upon guidelines. While these programs provide effective and meaningful coverage, residual exposure remains as the fuel expense risk cannot be completely recovered from shippers due to timing and volatility in the market. The Company continually monitors residual exposure, and where appropriate, may enter into derivative instruments.

Derivative instruments used by the Company to manage fuel expense risk may include, but are not limited to, swaps and options for crude oil, diesel and crack spreads. In addition, the Company may combine FX forward contracts with fuel derivatives to effectively hedge the risk associated with FX variability on fuel purchases and commodity hedges.

16.6.1 Energy Futures

At December 31, 2009, the Company had diesel futures contracts, which are accounted for as cash flow hedges, to purchase approximately 13.5 million US gallons during the period January 2010 to December 2010 at an average price of US$1.96 per US gallon. This represents approximately 5% of estimated fuel purchases for this period. At December 31, 2009, the unrealized gain on these futures contracts was $2.5 million and was reflected in "Other" current assets with the offset, net of tax, reflected in AOCI on our Consolidated Balance Sheet. At December 31, 2008, the unrealized loss on futures contracts was $4.5 million and was reflected in "Accounts payable and accrued liabilities" with the offset, net of tax, reflected in AOCI.

At December 31, 2009, the Company had no remaining crude futures contracts; these having been replaced by our diesel hedge program. In comparison, at December 31, 2008, the unrealized gain on crude futures contracts was $3.2 million and was reflected in "Other" current assets with the offset, net of tax, reflected in AOCI on our Consolidated Balance Sheet.

At December 31, 2009, the Company had no remaining FX forward contracts (which were used in conjunction with the crude purchases above). In comparison at December 31, 2008, the unrealized loss on these forward contracts was $0.1 million and was recognized in "Accounts payable and accrued liabilities" with the offset, net of tax, reflected in AOCI on our Consolidated Balance Sheet.

The impact of settled swaps increased "Fuel" expense in 2009 by $1.2 million due to a combination of realized losses of $0.8 million arising from settled commodity swaps and $0.4 million arising from settled FX forward contracts. The impact of settled swaps benefited "Fuel" expense in 2008 by $4.3 million as a result of realized gains of $6.1 million arising from settled swaps, partially offset by realized losses of $1.8 million arising from settled FX forward contracts. Included in the $0.8 million realized losses on commodity swaps in 2009 were $0.2 million in realized gains (2008 – realized losses $9.7 million) from settled derivatives that were not designated as hedges.

For every one cent increase in the price of a US gallon of diesel, fuel expense before tax and hedging will increase by approximately $3 million on an annual basis, assuming current FX rates and fuel consumption levels. We have a fuel risk mitigation program to moderate the impact of increases in fuel prices, which includes these swaps and our fuel cost recovery program.

16.7 STOCK-BASED COMPENSATION EXPENSE MANAGEMENT

16.7.1 Total Return Swap ("TRS")

The Company entered into a TRS May 2006 to reduce the volatility to the Company over time of three types of stock-based compensation programs: tandem share appreciation rights ("TSARs"), deferred share units ("DSUs") and restricted share units ("RSUs"). The TRS is a derivative that provides price appreciation and dividends, in return for a charge by the counterparty. The swaps were intended to minimize volatility to "Compensation and benefits" expense by providing a gain to substantially offset increased compensation expense as the share price increased and a loss to offset reduced compensation expense when the share price falls. If stock-based compensation share units fall out of the money after entering the program, the loss associated with the swap would no longer be offset by any compensation expense reductions, which would reduce the effectiveness of the swap. Going forward the Company does not intend to expand its TRS program.

"Compensation and benefits" expense on our Consolidated Statement of Income included a net gain on these swaps of $18.6 million in 2009 which was inclusive of both realized losses and unrealized gains (unrealized loss of $64.1 million in 2008). During 2009, in order to improve the effectiveness of the TRS in mitigating the volatility of stock-based compensation programs, CP unwound a portion of the program for a total cost of $31.1 million. At December 31, 2009, the unrealized loss on the remaining TRS of $18.2 million was included in "Accounts payable and accrued liabilities" on our Consolidated Balance Sheet (December 31, 2008 – $67.9 million included in "Other long-term liabilities").

17.0 Off-Balance Sheet Arrangements

17.1 SALE OF ACCOUNTS RECEIVABLE

During the second quarter of 2008, our accounts receivable securitization program was terminated and settled. Losses on the securitization program of $2.7 million in 2008 and $5.8 million in 2007 were included in "Other income and charges" on our Consolidated Statement of Income.

Proceeds from collections reinvested in the accounts receivable securitization program were $595.4 million for the year ended 2008, compared with $1,478.9 million for 2007.

17.2 GUARANTEES

At December 31, 2009, the Company had residual value guarantees on operating lease commitments of $167.3 million. The maximum amount that could be payable under these and all of the Company's other guarantees cannot be reasonably estimated due to the nature of certain of the guarantees. All or a portion of amounts paid under certain guarantees could be recoverable from other parties or through insurance. The Company has accrued for all guarantees that it expects to pay. As at December 31, 2009, these accruals amounted to $9.3 million.

18.0 Acquisition

18.1 DAKOTA, MINNESOTA & EASTERN RAILROAD CORPORATION

Effective October 4, 2007, the Company acquired all of the issued and outstanding shares of DM&E, a Class II railroad operating in the US Midwest, for a purchase price of approximately US$1.5 billion. DM&E's freight revenues are derived principally from transporting grain, industrial products and coal. DM&E has the option, but not the obligation, to construct a railway line into the Powder River Basin ("PRB") located in Wyoming, the largest thermal coal producing region in the US. No decision will be made by the Corporation on whether to construct a railway line into the PRB until certain milestones have been met. Future contingent payments of up to approximately US$1.1 billion, plus certain interest and inflationary adjustments may become payable up to December 31, 2025 upon the achievement of certain milestones towards the completion of a track expansion into the PRB and the achievement of certain associated traffic volume targets. Any contingent payments that may become payable would be recorded as an increase in the purchase price. The acquisition has been financed with cash on hand and debt (discussed further in Section 14.3 Financing Activities).

The purchase was subject to review and approval by the STB, during which time the shares of DM&E were placed in a voting trust. The STB approved the application to acquire control effective October 30, 2008. Prior to October 30, 2008, CP's investment in the DM&E had not been accounted for by CP on a consolidated basis and instead the investment in the DM&E was accounted for as an equity investment and reported as "Equity income in Dakota, Minnesota & Eastern Railroad Corporation" on the Consolidated Statement of Income.

19.0 Contractual Commitments

The accompanying table indicates our obligations and commitments to make future payments for contracts, such as debt and capital lease and commercial arrangements.

CONTRACTUAL COMMITMENTS

payments due by period (in millions)	Total	2010	2011 & 2012	2013 & 2014	2015 & beyond
Long-term debt	$ 4,215.6	$ 381.6	$ 327.3	$ 192.5	$ 3,314.2
Capital lease obligations	331.7	10.5	23.4	156.9	140.9
Operating lease obligation[1]	930.1	148.1	242.7	178.7	360.6
Supplier purchased obligations	1,762.3	222.2	281.2	280.4	978.5
Other long-term liabilities reflected on our Consolidated Balance Sheet[2]	3,464.6	106.7	203.3	177.4	2,977.2
Total contractual obligations	**$ 10,704.3**	**$ 869.1**	**$ 1,077.9**	**$ 985.9**	**$ 7,771.4**

[1] Residual value guarantees on certain leased equipment with a maximum exposure of $167.3 million (discussed further in Section 17.2 Guarantees) are not included in the minimum payments shown above, as management believes that we will not be required to make payments under these residual guarantees.

[2] Includes expected cash payments for restructuring, environmental remediation, asset retirement obligations, post-retirement benefits, workers' compensation benefits, long-term disability benefits, pension benefit payments for our non-registered supplemental pension plans, future income tax liabilities and certain other long-term liabilities. Projected payments for post-retirement benefits, workers' compensation benefits and long-term disability benefits include the anticipated payments for years 2010 to 2019. Pension contributions for our registered pension plans are not included due to the volatility in calculating them. Pension payments are discussed further in Section 20.5 Pension Plan Deficit. Future income tax liabilities may vary according to changes in tax rates, tax regulations and the operating results of the Company. As the cash impact in any particular year cannot be reasonably determined, all long-term future tax liabilities have been reflected in the "2015 & beyond" category in this table. Future income taxes are further discussed in Section 22.4 Future Income Taxes.

20.0 Future Trends and Commitments

20.1 AGREEMENTS AND RECENT DEVELOPMENTS

20.1.1 Tender Offer of Debt Securities

During the second quarter of 2009, the Company issued US$350 million 7.25% 10-year Notes for net proceeds of $408.2 million. The Notes are unsecured, but carry a negative pledge. The proceeds from this offering contributed to the repurchase of debt with a carrying amount of $555.3 million pursuant to a tender offer for a total cost of $571.9 million. Upon repurchase of the debt a net loss of $16.6 million was recognized in "Other income and charges". The loss consisted largely of premiums paid to bond holders to tender their debt and the write-off of unamortized fees, partly offset by a fair value adjustment (gain) recognized on the unwind of interest rate swaps associated with the 6.250% Notes that were repurchased (discussed further in Section 16.4.1 Interest Rate Swaps). The following table summarizes the principal amount, carrying amount and cost to redeem debt repurchased:

(in millions)	Principal amount in USD	Carrying amount in CDN	Cost to redeem in CDN
6.250% Notes due October 15, 2011	$154.3	$184.1	$184.6
5.75% Notes due May 15, 2013	298.6	342.7	359.1
6.50% Notes due May 15, 2018	24.8[1]	28.5	28.2
Total debt tendered	$477.7	$555.3	$571.9

[1] Includes US$2.7 million principal amount of debt repurchased prior to commencement of the debt tender.

20.1.2 Issuance of Common Shares

On February 3, 2009, CP filed a final prospectus offering for sale to the public, primarily in Canada and the US, of up to 13,900,000 CP common shares at a price of $36.75 Canadian per share. The offering closed on February 11, 2009 at which time CP issued 13,900,000 common shares, for gross proceeds of approximately $511 million (proceeds net of fees, issue costs and including future taxes were approximately $495.2 million). This issuance of additional CP common shares represents an approximate nine percent dilution to shareholders' value.

20.2 STOCK PRICE

The market value of our Common Shares measured at December 31, 2009 increased by $15.81 per share on the Toronto Stock Exchange in 2009 (from $40.98 on December 31, 2008 to $56.79 on December 31, 2009). The market value of our Common Shares decreased by $23.24 per share in 2008. These changes in share

price were caused in part by the equity market's reaction to the economic downturn in 2008 and prospects of future recovery in 2009.

20.3 ENVIRONMENTAL

Cash payments related to our environmental remediation program (described in Section 22.1 Environmental Liabilities) totalled $18.2 million in 2009, compared with $12.6 million in 2008 and $14.0 million in 2007. Cash payments for environmental initiatives are estimated to be approximately $15 million in 2010, $18 million in 2011, $16 million in 2012 and a total of approximately $72 million over the remaining years through 2019, which will be paid in decreasing amounts. All payments will be funded from general operations.

We continue to be responsible for remediation work on portions of a property in the State of Minnesota and continue to retain liability accruals for remaining future expected costs. The costs are expected to be incurred over approximately 10 years. The state's voluntary investigation and remediation program will oversee the work to ensure it is completed in accordance with applicable standards.

20.4 CERTAIN OTHER FINANCIAL COMMITMENTS

In addition to the financial commitments mentioned previously in Section 17.0 Off-Balance Sheet Arrangements and Section 19.0 Contractual Commitments, we are party to certain other financial commitments discussed below.

CERTAIN OTHER FINANCIAL COMMITMENTS AT DECEMBER 31, 2009

		Amount of commitment per period			
(in millions)	Total	2010	2011 & 2012	2013 & 2014	2015 & beyond
Letters of credit	$ 330.8	$ 330.8	$ –	$ –	$ –
Capital commitments	233.4	178.1	53.8	1.5	–
Offset financial liability	214.1	214.1	–	–	–
Total commitments	**$ 778.3**	**$ 723.0**	**$53.8**	**$ 1.5**	$ –

20.4.1 Letters of Credit

Letters of credit are obtained mainly to provide security to third parties as part of various agreements, such as required by our workers' compensation and pension fund requirements. We are liable for these contractual amounts in the case of non-performance under these agreements. As a result, our available line of credit is adjusted for contractual amounts obtained through letters of credit currently included within our revolving credit facility.

20.4.2 Capital Commitments

We remain committed to maintaining our current high level of plant quality and renewing our franchise. As part of this commitment, we have entered contracts with suppliers to make various capital purchases related to track programs, locomotive acquisitions, freight cars, and land. Payments for these commitments are due in 2010 through 2028. These expenditures are expected to be financed by cash generated from operations or by issuing new debt.

20.4.3 Offset Financial Liability

We entered into a bank loan to finance the acquisition of certain equipment. This loan is offset by a financial asset with the same institution. At December 31, 2009, the loan had a balance of $219.8 million, offset by a financial asset of $214.1 million. The remainder is included in "Long-term debt" on our Consolidated Balance Sheet.

20.5 PENSION PLAN DEFICIT

We estimate that every 1.0 percentage point increase (or decrease) in the discount rate attributable to changes in long Government of Canada bond yields can cause our defined benefit pension plans' deficit to decrease (or increase) by approximately $550 million, reflecting the changes to both the pension obligations and the value of the pension funds' debt securities. Similarly, for every 1.0 percentage point the actual return on assets varies above (or below) the estimated return for the year, the deficit would decrease (or increase) by approximately $70 million. Adverse experience with respect to these factors could eventually increase funding and pension expense significantly, while favourable experience with respect to these factors could eventually decrease funding and pension expense significantly.

The plans' investment policies provide for between 45% and 51% of the plans' assets to be invested in public equity securities. As a result, stock market performance is the key driver in determining the pension funds' asset performance. Most of the plans' remaining assets are invested in debt securities which, as mentioned above, provide a partial offset to the increase (or decrease) in our pension deficit caused by decreases (or increases) in the discount rate.

The deficit will fluctuate according to future market conditions and funding will be revised as necessary to reflect such fluctuations. We will continue to make contributions to the pension plans that, at a minimum, meet pension legislative requirements.

We made contributions of $595.2 million to the defined benefit pension plans in 2009, compared with $95.4 million in 2008. Our 2009 contributions included voluntary prepayments in December

2009 of $500 million to our main Canadian plan and $7.4 million to our US plans to reduce the volatility of future pension funding requirements. We have significant flexibility with respect to the rate at which we apply these voluntary prepayments to reduce future years' pension contribution requirements.

We estimate our aggregate pension contributions in each of 2010 and 2011 to be in the range of $150 million to $200 million. These estimates reflect the Company's current intentions with respect to the rate at which the Company will apply its $500 million prepayment against 2010 and 2011 contribution requirements.

Future pension contributions will be highly dependent on our actual experience with such variables as investment returns, interest rate fluctuations and demographic changes, on the rate at which the December 2009 voluntary prepayment is applied against pension contribution requirements, and on any changes in the regulatory environment.

20.6 RESTRUCTURING

Cash payments related to severance under all restructuring initiatives totalled $27.0 million in 2009, compared with $40.7 million in 2008 and $47.0 million in 2007. Cash payments for restructuring initiatives are estimated to be approximately $23 million in 2010, $18 million in 2011, $14 million in 2012, and a total of approximately $34 million over the remaining years through 2025. These amounts include residual payments to protected employees for previous restructuring plans that have been completed.

21.0 Business Risks and Enterprise Risk Management

In the normal course of our operations, we are exposed to various business risks and uncertainties that can have an effect on our financial condition. While some financial exposures are reduced through insurance and hedging programs we have in place, there are certain cases where the financial risks are not fully insurable or are driven by external factors beyond our influence or control.

As part of the preservation and delivery of value to our shareholders, we have developed an integrated Enterprise Risk Management ("ERM") framework to support consistent achievement of key business objectives through pro-active management of risk. The objective of the program is to identify events that result from risks, thereby requiring active management. Each event identified is assessed based on the potential impact and likelihood, taking account of financial, environmental, reputation impacts, and existing management control. Risk mitigation strategies are formulated to accept, treat, transfer, or eliminate the exposure to the identified events. Readers are cautioned that the following is not an exhaustive list of all the risks we are exposed to, nor will our mitigation strategies eliminate all risks listed.

21.1 TECK COAL LIMITED

CP's contract with Teck Coal Limited ("Teck") for the transportation of coal, expired March 31, 2009. Teck filed for Final Offer Arbitration ("FOA"), a regulatory proceeding, and arising from the FOAs, the rates for transportation of Teck coal to March 2010 were established. As part of the rate process, Teck also secured a rate for routing some of the existing export coal traffic via an interchange with another railway at Kamloops, BC. Traffic moving over the Kamloops interchange will not exceed 3.5 million metric tons between July 2009 and March 1, 2010. For CP, the Kamloops traffic represents approximately 15% of historic annual total Teck coal shipping volumes. The rate and routing outcomes have an adverse impact on CP's business.

The regulatory proceedings established rates that reduced revenues for nine months of 2009 (discussed further in Section 7.3.1.3 Coal) and will remain in effect for the first quarter of 2010.

CP is currently in negotiations for a new contract as the existing contract expires March 2010. The outcome of these negotiations can not be predicted, including, but not limited to, price, volumes of coal to be transported and term of the contract.

21.2 COMPETITION

We face significant competition for freight transportation in Canada and the US, including competition from other railways and trucking and barge companies. Competition is based mainly on price, quality of service and access to markets. Competition with the trucking industry is generally based on freight rates, flexibility of service and transit time performance. The cost structure and service of our competitors could impact our competition and have a materially adverse impact on our business or operating results.

To mitigate competition risk, our strategies include:

- creating long-term value for customers, shareholders and employees by profitably growing within the reach of our rail franchise and through strategic additions to enhance access to markets and quality of service;
- renewing and maintaining infrastructure to enable safe and fluid operations;
- improving handling through IOP to reduce costs and enhance quality and reliability of service; and
- exercising a disciplined yield approach to competitive contract renewals and bids.

21.3 LIQUIDITY

CP has in place a revolving credit facility of $945 million, with an accordion feature to $1,150 million, of which $330 million was committed for letters of credit and $615 million was available on December 31, 2009. This facility is arranged with a core group of 15 highly rated international financial institutions and incorporates pre-agreed pricing. Arrangements with 14 of the 15 financial institutions extend through November 2012, with one institution extending through November 2011. In addition, CP also has available from a financial institution a credit facility of $130 million, of which $130 million of this facility was available on December 31, 2009. The majority of this facility is available through the end of 2011. Both facilities are available on next day terms and are subject to a minimum debt to total capitalization ratio. Should the Company's senior unsecured debt not be rated at least investment grade by Moody's and S&P, the Company will be further required to maintain a minimum fixed charge coverage ratio. At December 31,

2009, the Company satisfied the thresholds stipulated in both financial covenants.

It is CP's intention to manage its long-term financing structure to maintain its investment grade rating.

Surplus cash is invested into a range of short dated money market instruments meeting or exceeding the parameters of our investment policy.

21.4 REGULATORY AUTHORITIES

21.4.1 Regulatory Change

Our railway operations are subject to extensive federal laws, regulations and rules in both Canada and the US which directly affect how we manage many aspects of our railway operation and business activities. Our operations are primarily regulated by the Canadian Transportation Agency ("the Agency") and Transport Canada in Canada and the FRA and Surface Transportation Board ("the STB") in the US. Various other federal regulators directly and indirectly affect our operations in areas such as health, safety, security and environment and other matters, all of which may affect our business or operating results.

The Canada Transportation Act ("CTA") provides shipper rate and service remedies, including Final Offer Arbitration ("FOA"), competitive line rates and compulsory inter-switching. In 2008, Parliament amended the CTA. The amendments concern, but are not limited to, the grain revenue cap, commuter and passenger access, FOA, and charges for ancillary services and railway noise. No assurance can be given as to the effect on CP of the amendments to the CTA or as to the content, timing or effect on CP of any anticipated additional legislation.

The FRA regulates safety-related aspects of our railway operations in the US. State and local regulatory agencies may also exercise limited jurisdiction over certain safety and operational matters of local significance. In the US, the Railway Safety Improvement Act became law on October 16, 2008. Among other things, this law requires the introduction of Positive Train Control by 2015 (discussed further in Section 21.4.3 Positive Train Control); limits freight rail crews' duty time; and requires development of a crew fatigue management plan. Although it is too early to assess the possible impact of this legislation on the Company, the requirements imposed by this legislation could have an adverse impact on the Company's financial condition and results of operations.

The STB regulates commercial aspects of CP's railway operations in the US. The STB is an economic regulatory agency that Congress charged with the fundamental mandate of resolving railroad rate and service disputes and reviewing proposed railroad mergers. The STB serves as both an adjudicatory and a regulatory body. The agency has jurisdiction over railroad rate and service issues and rail restructuring transactions (mergers, line sales, line construction, and line abandonments).

In 2007, the STB revised rules relating to railway rate cases to address, among other things, concerns raised by small and medium sized shippers that the previous rules resulted in costly and lengthy proceedings. Few cases have been filed, and no case has been filed against the Company, under the new rules. It is too soon to assess the possible impact on CP of such new rules.

During 2009, the railroad industry in the US, shippers and representatives of the Senate Commerce Committee met to discuss possible changes to the legislation which governs the STB's mandate. The Senate Commerce Committee produced a draft Bill. To date, the House of Representatives has not produced a related Bill. It is too soon to determine if any Bill at all will be enacted or if in the event any such Bill is enacted whether it would have a material impact on the Company's financial condition and results of operations.

To mitigate statutory and regulatory impacts, we are actively and extensively engaged throughout the different levels of government and regulators, both directly and indirectly through industry associations, including the Association of American Railroads ("AAR") and the Railway Association of Canada ("RAC").

21.4.2 Security

We are subject to statutory and regulatory directives in Canada and the US that address security concerns. Because CP plays a critical role in the North American transportation system, our rail lines, facilities, and equipment, including rail cars carrying hazardous materials, could be direct targets or indirect casualties of terrorist attacks. Regulations by the Department of Transportation and the Department of Homeland Security include speed restrictions, chain of custody and security measures which could cause service degradation and higher costs for the transportation of hazardous materials, especially toxic inhalation materials. New legislative changes in Canada to the Transportation of Dangerous Goods Act are expected to add new security regulatory requirements. In addition, insurance premiums for some or all of our current coverage could increase significantly, or certain coverage may not be available to us in the future. While CP will continue to work closely with Canadian and US government agencies, future decisions by these agencies on security matters or decisions by the industry in response to security threats to the North American rail network could have a materially adverse effect on our business or operating results.

As we strive to ensure our customers have unlimited access to North American markets, we have taken the following steps to provide enhanced security and reduce the risks associated with the cross-border transportation of goods:

- to strengthen the overall supply chain and border security, we are a certified carrier in voluntary security programs, such as the Customs-Trade Partnership Against Terrorism and Partners in Protection;
- to streamline clearances at the border, we have implemented several regulatory security frameworks that focus on the provision of advanced electronic cargo information and improved security technology at border crossings, including the implementation of Vehicle and Cargo Inspection System at five of our border crossings;
- to strengthen railway security in North America, we signed a revised voluntary Memorandum of Understanding with Transport Canada and worked with the AAR to develop and put in place an extensive industry-wide security plan to address terrorism and

security-driven efforts seeking to restrict the routings and operational handlings of certain hazardous materials;

- to reduce toxic inhalation risk in high threat urban areas, we are working with the Transportation Security Administration; and
- to comply with new US regulations for rail security of sensitive materials, we have implemented procedures to maintain positive chain of custody and we will be completing annual route assessments to select and use the route posing the least overall safety and security risk.

21.4.3 Positive Train Control

In the United States, the Rail Safety Improvement Act requires Class I railroads to implement by December 31, 2015, interoperable Positive Train Control ("PTC") on main track in the United States that has passenger rail traffic or toxic inhalant hazard commodity traffic. The legislation defines PTC as a system designed to prevent train-to-train collisions, over-speed derailments, incursions into established work zone limits, and the movement of a train through a switch left in the wrong position. The FRA is developing rules and regulations for the implementation of PTC, and requires the filing of PTC Implementation Plans by April 16, 2010, which outline the Company's solution for interoperability as well as its consideration of relative risk in the deployment plan. The Company is participating in industry and government working groups to evaluate the scope of effort that will be required to comply with these regulatory requirements, and to further the development of an industry standard interoperable solution that can be supplied in time to complete deployment. At this time CP estimates the cost to implement the required PTC on its railway in the United States to be up to US$250 million.

21.5 LABOUR RELATIONS

Certain of our union agreements are currently under renegotiation. We cannot guarantee these negotiations will be resolved in a timely manner or on favourable terms. Work stoppage may occur if the negotiations are not resolved, which could materially impact business or operating results.

At December 31, 2009, approximately 75% of our workforce was unionized and approximately 75% of our workforce was located in Canada. Unionized employees are represented by a total of 37 bargaining units. Agreements are in place with five of seven bargaining units that represent our employees in Canada and one of 30 bargaining units that represent employees in our US operations. For the status of negotiations please see below.

21.5.1 Canada

We are party to collective agreements with seven bargaining units in our Canadian operations. Currently, collective agreements are in effect with five of the seven bargaining units. Of the agreements that are in place, one expires at the end of 2010 (Canadian Auto Workers ("CAW") – representing car and locomotive repair employees), two expire at the end of 2011 (Teamsters Canada Rail Conference ("TCRC") – representing running trades employees and the TCRC-Rail Canada Traffic Controllers – representing rail traffic controllers), and two expire at the end of 2012 (Canadian Pacific Police Association and the United Steelworkers – representing clerical workers). Negotiations are currently ongoing with the TCRC-Maintenance of Way Employees Division and the International Brotherhood of Electrical Workers – representing signals employees.

21.5.2 US

We are party to collective agreements with fourteen bargaining units of our Soo Line subsidiary, thirteen bargaining units of our D&H subsidiary, and two bargaining units of our DM&E subsidiary, with a third bargaining unit certified to represent signalmen in April 2009.

Soo Line agreements with all fourteen bargaining units representing train service employees, car repair employees, locomotive engineers, train dispatchers, yard supervisors, clerks, machinists, boilermakers and blacksmiths, signal maintainers, electricians, sheet metal workers, mechanical labourers, track maintainers, and mechanical supervisors opened for negotiation in January 2010. Soo Line has joined with the other US Class I railroads in national bargaining for this upcoming round of negotiations.

D&H has settled contracts for the last round of negotiations with twelve of the thirteen bargaining units. Effective January 2010, all agreements with locomotive engineers, train service employees, car repair employees, signal maintainers, yardmasters, electricians, machinists, mechanical labourers, engineering supervisors and mechanical supervisors are re-opened. Negotiations continue with the police. For the 2010 round of negotiations, D&H and its unions have committed to stand by the outcome of wage, benefits, and rules negotiations at the national table.

DM&E currently has an agreement in place with one bargaining unit that extends to the end of 2013 with engineers and conductors on DM&E. Negotiations continue with the locomotive engineers and conductors on the former Iowa, Chicago & Eastern Railroad, resuming in March 2010. Negotiations on the first contract to cover signal and communications workers continue in the first quarter of 2010.

21.6 ENVIRONMENTAL LAWS AND REGULATIONS

Our operations and real estate assets are subject to extensive federal, provincial, state and local environmental laws and regulations governing emissions to the air, discharges to waters and the handling, storage, transportation and disposal of waste and other materials. If we are found to have violated such laws or regulations it could materially affect our business or operating results. In addition, in operating a railway, it is possible that releases of hazardous materials during derailments or other accidents may occur that could cause harm to human health or to the environment. Costs of remediation, damages and changes in regulations could materially affect our operating results and reputation.

We have implemented a comprehensive Environmental Management System, to facilitate the reduction of environmental risk. CP's annual Corporate and Operations Environmental Plans state our current environmental goals, objectives and strategies.

Specific environmental programs are in place to address areas such as air emissions, wastewater, management of vegetation, chemicals and waste, storage tanks and fuelling facilities. We also undertake environmental impact assessments. There is continued focus on

preventing spills and other incidents that have a negative impact on the environment. There is an established Strategic Emergency Response Contractor network and spill equipment kits located across Canada and the US to ensure a rapid and efficient response in the event of an environmental incident. In addition, emergency preparedness and response plans are regularly updated and tested.

We have developed an environmental audit program that comprehensively, systematically and regularly assesses our facilities for compliance with legal requirements and our policies for conformance to accepted industry standards. Included in this is a corrective action follow-up process and semi-annual review by the Health, Safety, Security and Environment Committee established by the Board of Directors.

We focus on key strategies, identifying tactics and actions to support commitments to the community. Our strategies include:

- protecting the environment;
- ensuring compliance with applicable environmental laws and regulations;
- promoting awareness and training;
- managing emergencies through preparedness; and
- encouraging involvement, consultation and dialogue with communities along our lines.

21.7 CLIMATE CHANGE

In both Canada and the United States the federal governments have not designated railway transportation a large final emitter with respect to greenhouse gas emissions (GHG). Also the railway transportation industry is currently not regulated with respect to GHG emissions, nor do we operate under a regulated cap of GHG emissions. Growing support for climate change legislation is likely to result in changes to the regulatory framework in Canada and the United States. However, the timing and specific nature of those changes are difficult to predict. Specific instruments such as carbon taxes, and technical and fuel standards have the ability to significantly affect the Company's capital and operating costs. Restrictions, caps and/or taxes on the emissions of GHG could also affect the markets for, or the volume of, the goods the company transports. The fuel efficiency of railways creates a significant advantage over trucking, which currently handles a majority of the market share of ground transportation.

Potential physical risks associated with climate change include damage to railway infrastructure due to extreme weather effects, i.e. increased flooding, winter storms. Improvements to infrastructure design and planning are used to mitigate the potential risks posed by weather events. The Company maintains flood plans, winter operating plans, avalanche risk management program and geotechnical monitoring of slope stability.

21.8 FINANCIAL RISKS

21.8.1 Pension Funding Status Volatility

Our main Canadian defined benefit pension plan accounts for 97% of CP's pension obligation and can produce significant volatility in pension funding requirements, given the pension fund's size, the differing drivers of the pension asset and liability values, and Canadian statutory pension funding requirements. Despite the fact that CP has made several changes to the plan's investment policy over the last several years to reduce this volatility, including the reduction of the plan's public equity markets exposure, the recent and rapid declines in the value of public equity securities, reduction in the long term Government of Canada bond yields and other economic changes have resulted in a significant pension funding shortfall.

21.8.2 Fuel Cost Volatility

Fuel expense constitutes a significant portion of CP's operating costs and can be influenced by a number of factors, including, without limitation, worldwide oil demand, international politics, weather, refinery capacity, unplanned infrastructure failures, labour and political instability and the ability of certain countries to comply with agreed-upon production quotas.

Our mitigation strategy includes a fuel cost recovery program and from time to time derivative instruments (specific instruments currently used are discussed further in Section 16.6 Fuel Price Management). The fuel cost recovery program reflects changes in fuel costs, which are included in freight rates. Freight rates will increase when fuel prices rise and will decrease when fuel costs decrease. While fluctuations in fuel cost are mitigated, the risk cannot be completely eliminated due to timing and the volatility in the market.

To address the residual portion of our fuel costs not mitigated by our fuel recovery programs, CP started a systematic hedge program in the second quarter of 2009. The goal of the program is to hedge in increasing increments CP's upcoming 12-month's fuel consumption with up to 12% hedged.

21.8.3 Foreign Exchange Risk

Although we conduct our business primarily in Canada, a significant portion of our revenues, expenses, assets and liabilities including debt are denominated in US dollars. Consequently, our results are affected by fluctuations in the exchange rate between these currencies. The value of the Canadian dollar is affected by a number of domestic and international factors, including, without limitation, economic performance, Canadian, US and international monetary policies and US debt levels. Changes in the exchange rate between the Canadian dollar and other currencies (including the US dollar) make the goods transported by us more or less competitive in the world marketplace and, in turn, positively or negatively affect our revenues and expenses. To manage this exposure to fluctuations in exchange rates between Canadian and US dollars, we may sell or purchase US dollar forwards at fixed rates in future periods. Foreign exchange management is discussed further in Section 16.5 Foreign Exchange Management.

21.8.4 Interest Rate Risk

In order to meet our capital structure requirements, we may enter into long-term debt agreements. These debt agreements expose us to increased interest costs on future fixed debt instruments and existing variable rate debt instruments should market rates increase. In addition, the present value of our assets and liabilities will also vary with interest rate changes. To manage our interest rate exposure, we may enter into forward rate agreements such as treasury rate locks or

bond forwards that lock in rates for a future date, thereby protecting ourselves against interest rate increases. We may also enter into swap agreements whereby one party agrees to pay a fixed rate of interest while the other party pays a floating rate. Contingent on the direction of interest rates, we may incur higher costs depending on our contracted rate. Interest rate management is discussed further in Section 16.4 Interest Rate Management.

21.9 GENERAL AND OTHER RISKS

There are factors and developments that are beyond the influence or control of the railway industry generally and CP specifically which may have a material adverse effect on our business or operating results. Our freight volumes and revenues are largely dependent upon the performance of the North American and global economies, which remains uncertain, and other factors affecting the volumes and patterns of international trade. CP's bulk traffic is dominated by grain, metallurgical coal, fertilizers and sulphur. Factors outside of CP's control which affect bulk traffic include: (i) with respect to grain volumes, domestic production-related factors such as weather conditions, acreage plantings, yields and insect populations, (ii) with respect to coal volumes, global steel production, (iii) with respect to fertilizer volumes, grain and other crop markets, with both production levels and prices relevant, and (iv) with respect to sulphur volumes, industrial production and fertilizer production, both in North America and abroad. The merchandise commodities transported by the Company include those relating to the forestry, energy, industrial, automotive and other consumer spending sectors. Factors outside of CP's control which affect this portion of CP's business include the general state of the North American economy, with North American industrial production, business investment and consumer spending being the general sources of economic demand. Housing, auto production and energy development are also specific sectors of importance. Factors outside of CP's control which affect the Company's intermodal traffic volumes include North American consumer spending and a technological shift toward containerization in the transportation industry that has expanded the range of goods moving by this means.

Adverse changes to any of the factors outside of CP's control which affect CP's bulk traffic, the merchandise commodities transported by CP or CP's intermodal traffic volumes or adverse changes to fuel prices could have a material adverse effect on CP's business, financial condition, results of operations and cash flows.

We are also sensitive to factors including, but not limited to, natural disasters, security threats, commodity pricing, global supply and demand, and supply chain efficiency. Other business risks include: potential increase in maintenance and operational costs, uncertainties of litigation, risks and liabilities arising from derailments and technological changes.

22.0 Critical Accounting Estimates

To prepare consolidated financial statements that conform with Canadian GAAP, we are required to make estimates and assumptions that affect the reported amounts of assets and liabilities, the disclosure of contingent assets and liabilities at the date of the consolidated financial statements and the reported amounts of revenues and expenses during the reported period. Using the most current information available, we review our estimates on an ongoing basis, including those related to environmental liabilities; pensions and other benefits; property, plant and equipment; future income taxes; legal and personal injury liabilities; long-term floating rate notes and goodwill and intangible assets.

The development, selection and disclosure of these estimates, and this MD&A, have been reviewed by the Board of Directors' Audit, Finance and Risk Management Committee, which is comprised entirely of independent directors.

22.1 ENVIRONMENTAL LIABILITIES

We estimate the probable cost to be incurred in the remediation of property contaminated by past railway use. We screen and classify sites according to typical activities and scale of operations conducted, and we develop remediation strategies for each property based on the nature and extent of the contamination, as well as the location of the property and surrounding areas that may be adversely affected by the presence of contaminants. We also consider available technologies, treatment and disposal facilities and the acceptability of site-specific plans based on the local regulatory environment. Site-specific plans range from containment and risk management of the contaminants through to the removal and treatment of the contaminants and affected soils and ground water. The details of the estimates reflect the environmental liability at each property. We are committed to fully meeting our regulatory and legal obligations with respect to environmental matters.

Liabilities for environmental remediation may change from time to time as new information about previously untested sites becomes known. The net liability may also vary as the courts decide legal proceedings against outside parties responsible for contamination. These potential charges, which cannot be quantified at this time, are not expected to be material to our financial position, but may materially affect income in the period in which a charge is recognized. Increases to costs would be reflected as increase to "Other long-term liabilities" on our Consolidated Balance Sheet and to "Purchased services and other" within operating expenses on our Consolidated Statement of Income.

At December 31, 2009, the accrual for environmental remediation on our Consolidated Balance Sheet amounted to $121.3 million (2008 – $151.1 million), of which the long-term portion amounting to $106.5 million (2008 – $130.2 million) was included in "Other long-term liabilities" and the short-term portion amounting to $14.8 million (2008 – $20.9 million) was included in "Accounts payable and accrued liabilities". Total payments were $18.2 million in 2009 and $12.6 million in 2008. The US dollar-denominated portion of the liability was affected by the change in FX, resulting in a decrease in environmental liabilities of $14.3 million in 2009 and an increase of $12.1 million in 2008. In the fourth quarter of 2008, the accrual for environmental remediation increased by $43.5 million as a result of the purchase of the DM&E.

22.2 PENSIONS AND OTHER BENEFITS

We have defined benefit and defined contribution pension plans. Other benefits include post-retirement medical and life insurance for pensioners, and some post-employment workers' compensation and long-term disability benefits in Canada. Workers' compensation

benefits are described in Section 22.5 Legal and Personal Injury Liabilities. Pension and post-retirement benefits liabilities are subject to various external influences and uncertainties, as described in Section 20.5 Pension Plan Deficit.

Pension costs are actuarially determined using the projected-benefit method prorated over the credited service periods of employees. This method incorporates our best estimates of expected plan investment performance, salary escalation and retirement ages of employees. The expected return on fund assets is calculated using market-related asset values developed from a five-year average of market values for the fund's public equity securities (with each prior year's market value adjusted to the current date for assumed investment income during the intervening period) plus the market value of the fund's fixed income, real estate and infrastructure securities, subject to the market-related asset value not being greater than 120% of the market value nor being less than 80% of the market value. The discount rate we use to determine the benefit obligation is based on market interest rates on high-quality corporate debt instruments with matching cash flows. Unrecognized actuarial gains and losses in excess of 10% of the greater of the benefit obligation and the market-related value of plan assets are amortized over the expected average remaining service period of active employees expected to receive benefits under the plan (approximately 10 years). Prior service costs arising from collectively bargained amendments to pension plan benefit provisions are amortized over the term of the applicable union agreement (discussed further in Section 13.1.3 Pension Prior Service Costs). Prior service costs arising from all other sources are amortized over the expected average remaining service period of active employees who were expected to receive benefits under the plan at the date of amendment. A transitional asset and obligation, which arose from implementing the CICA Accounting Standard Section 3461 "Employee Future Benefits" effective January 1, 2000, are being amortized over the expected average remaining service period of active employees who were expected to receive benefits under the plan at January 1, 2000 (approximately 13 years).

The obligations with respect to post-retirement benefits, including health care and life insurance, are actuarially determined and are accrued using the projected-benefit method prorated over the credited service periods of employees. The obligations with respect to post-employment benefits, including some workers' compensation and long-term disability benefits in Canada, are the actuarial present value of benefits payable to employees on disability.

Fluctuations in the post-retirement benefit obligation can result from changes in the discount rate used. A 1.0 percentage point increase (decrease) in the discount rate would decrease (increase) the liability by approximately $40 million. We included post-retirement benefits accruals of $234.4 million in "Other long-term liabilities" and post-retirement benefits accruals of $21.1 million in "Accounts payable and accrued liabilities" on our December 31, 2009 Consolidated Balance Sheet.

"Prepaid pension costs and other assets" on our December 31, 2009 Consolidated Balance Sheet included prepaid pension costs of $1,644.4 million. This accrued benefit asset is increased mainly by amounts contributed to the plans by the Company, partially offset by the amount of pension expense for the year. Our Consolidated Balance Sheet also included $0.2 million in "Accounts payable and accrued liabilities" and $0.6 million in "Other long-term liabilities" for pension obligations.

Pension and post-retirement benefits expenses were included in "Compensation and benefits" on our December 31, 2009 Statement of Consolidated Income. Combined pension and post-retirement benefits expenses (excluding self-insured workers compensation and long-term disability benefits) were $38.4 million in 2009, compared with $82.8 million in 2008.

Pension expense consists of defined benefit pension expense plus defined contribution pension expense (equal to contributions). Pension expense was $7.8 million in 2009, compared with $45.0 million in 2008. Defined benefit pension expense was $5.1 million in 2009, compared with $41.9 million in 2008. Defined contribution pension expense was $2.7 million for 2009, compared with $3.1 million in 2008. We estimate pension expense for 2010 to equal approximately $52 million. Post-retirement benefits expense was $30.6 million in 2009, compared with $37.8 million in 2008. Post-retirement benefit expense for 2010 is not expected to differ materially from the 2009 expense.

22.3 PROPERTY, PLANT AND EQUIPMENT

CP performs depreciation studies of each property group approximately every two years to update deprecation rates. The depreciation studies are based on statistical analysis of historical retirements of properties in the group and incorporate engineering estimates of changes in current operations and of technological advance. We depreciate the cost of properties, net of salvage, on a straight-line basis over the estimated useful life of the property group. We follow the group depreciation method under which a single depreciation rate is applied to the total cost in a particular class of property, despite differences in the same service life or salvage value of individual properties within the same class. The estimates of economic lives are uncertain and can vary due to technological changes, and changes in residual values, in unusual weather patterns, in the rate of wear. Under the group depreciation method, retirements or disposals of properties in the normal course of business are accounted for by charging the cost of the property less any net salvage to accumulated depreciation.

Due to the capital intensive nature of the railway industry, depreciation represents a significant part of our operating expenses. The estimated useful lives of properties have a direct impact on the amount of depreciation recorded as a component of "Net properties" on our Consolidated Balance Sheet. At December 31, 2009, accumulated depreciation was $5,328.7 million. Depreciation expense related to properties amounted to $488.9 million in 2009, compared with $442.5 million in 2008.

Revisions to the estimated useful lives and net salvage projections for properties constitute a change in accounting estimate and we address these prospectively by amending depreciation rates. It is anticipated that there will be changes in the estimates of weighted average useful lives and net salvage for each property group as assets are acquired, used and retired. Substantial changes in either the useful lives of properties or the salvage assumptions could result in significant changes to depreciation expense. For example, if the

estimated average life of road locomotives, our largest asset group, increased (or decreased) by 5%, annual depreciation expense would decrease (or increase) by approximately $3 million.

We review the carrying amounts of our properties when circumstances indicate that such carrying amounts may not be recoverable based on future undiscounted cash flows. When such properties are determined to be impaired, recorded asset values are revised to the fair value and an impairment loss is recognized.

Depreciation expense increased $10.6 million in 2009 from pro forma 2008 primarily due to unfavourable FX and increased capital expenditures partially offset by favourable depreciation rate changes, mainly in information systems and locomotives and retirements of properties.

22.4 FUTURE INCOME TAXES

We account for future income taxes in accordance with the CICA Accounting Standard Section 3465 "Income Taxes", which is based on the liability method. This method focuses on a company's balance sheet and the temporary differences otherwise calculated from the comparison of book versus tax values. It is assumed that such temporary differences will be settled in the future income tax assets and liabilities at the balance sheet date.

In determining future income taxes, we make estimates and assumptions regarding future tax matters, including estimating the timing of the realization and settlement of future income tax assets (including the benefit of tax losses) and liabilities. Future income taxes are calculated using the current substantively enacted federal and provincial future income tax rates, which may differ in future periods.

Future income tax expense totalling $153.2 million was included in income tax for 2009 and $156.3 million was included in income tax in 2008. The changes in future income tax in 2009 were primarily due to lower taxable income and tax rate changes implemented by provincial governments (discussed further in Section 10.6 Income Taxes). The change in future tax expense for 2008 was also due to a reduction in the impact of tax rate changes recognized in prior years. At December 31, 2009, future income tax liabilities of $2,549.5 million (2008 – $2,527.6 million) were recorded as a long-term liability and comprised largely of temporary differences related to accounting for properties. Future income tax benefits of $128.1 million realizable within one year were recorded as a current asset compared to $76.5 million at December 31, 2008.

22.5 LEGAL AND PERSONAL INJURY LIABILITIES

We are involved in litigation in Canada and the US related to our business. Management is required to establish estimates of potential liability arising from incidents, claims and pending litigation, including personal injury claims and certain occupation-related and property damage claims.

These estimates are determined on a case-by-case basis. They are based on an assessment of the actual damages incurred, current legal advice with respect to settlements in other similar cases. We employ experienced claims adjusters who investigate and assess the validity of individual claims made against us and estimate the damages incurred.

A provision for incidents, claims or litigation is recorded based on the facts and circumstances known at the time. We accrue for likely claims when the facts of an incident become known and investigation results provide a reasonable basis for estimating the liability. The lower end of the range is accrued if the facts and circumstances permit only a range of reasonable estimates and no single amount in that range is a better estimate than any other. Additionally, for administrative expediency, we keep a general provision for lesser-value injury cases. Facts and circumstances related to asserted claims can change, and a process is in place to monitor accruals for changes in accounting estimates.

With respect to claims related to occupational health and safety in the provinces of Quebec, Ontario, Manitoba and British Columbia, estimates administered through the Workers' Compensation Board ("WCB") are actuarially determined. In the provinces of Saskatchewan and Alberta, we are assessed for an annual WCB contribution. As a result, this amount is not subject to estimation by management.

Railway employees in the US are not covered by a workers' compensation program, but are covered by US federal law for railway employees. Although we manage in the US using a case-by-case comprehensive approach, for accrual purposes, a combination of case-by-case analysis and statistical analysis is utilized.

Provisions for incidents, claims and litigation charged to income, which are included in "Purchased services and other" on our Consolidated Statement of Income, amounted to $54.5 million in 2009 and $79.7 million in 2008.

Accruals for incidents, claims and litigation, including WCB accruals, totalled $147.1 million, net of insurance recoveries, at December 31, 2009. The total accrual included $88.0 million in "Other long-term liabilities" and $75.1 million in "Accounts payable and accrued liabilities", offset by $0.8 million in "Prepaid pension costs and other assets" and $15.2 million in "Accounts receivable".

22.6 LONG-TERM FLOATING RATE NOTES

At December 31, 2009, long-term floating rate notes received in replacement of ABCP have been valued at their estimated fair value (discussed further in Section 10.3.1 Change in Estimated Fair Value of Long-term Floating Rate Notes and Asset-backed Commercial Paper). Long-term floating rate notes, at their estimated fair value of $69.3 million, were included in "Investments". The reduction in the estimated fair value during 2009 of $3.4 million reflects the redemption:

- at par of certain of the Company's investments in MAV 3 Class 9 TA Tracking notes and MAV 2 Class 8 IA Tracking notes;
- at close to par of certain of the Company's investment in MAV 2 Class A-1 notes and MAV 2 Class 7 IA Tracking notes; and
- the full redemption of MAV 2 Class 14 notes with no proceeds being received by CP.

These redemptions were offset by accretion and changes in market assumptions. The change in the market assumptions in 2009

resulted in an unrealized gain of $1.7 million (2008 – $49.4 million charge against income).

Continuing uncertainties regarding the value of the assets which underlie the long-term floating rate notes and the amount and timing of cash flows could give rise to a further material change in the value of the Company's investment in long-term floating rate notes which would impact the Company's near term earnings.

22.7 GOODWILL AND INTANGIBLE ASSETS

As part of the acquisition of DM&E in 2007, CP recognized goodwill of US$147 million on the allocation of the purchase price, determined as the excess of the purchase price over the fair value of the net assets acquired. Since the acquisition the operations of DM&E have been integrated with CP's operations in the US, as a result the related goodwill is now allocated to CP's US reporting unit. Goodwill is tested for impairment at least once per year as at October 1st. The goodwill impairment test determines if the fair value of the reporting unit continues to exceed its net book value, or whether an impairment is required. The fair value of the reporting unit is affected by projections of its profitability including estimates of revenue growth which are inherently uncertain. Given the downturn in the world economy in 2009, CP monitored the fair value of the related reporting unit for potential impairment during the year. The annual test for impairment, performed with the assistance of outside consultants, determined that the fair value of CP's US reporting unit exceeded the carrying value by approximately 10% and that no impairment would be required in 2009.

The impairment test was performed primarily using an income approach based on discounted cash flows. In which discount rates of 8.75% to 9.0% were used, based on the weighted average cost of capital. A change in discount rates of 0.25% would change the valuation by 5 to 6%. The valuation used revenue growth projections ranging from 4.5 to 6.9% annually. A change in the long term growth rate of 0.25% would change the valuation by 4 to 5%. These sensitivities indicate that a prolonged recession or increased borrowing rates could result in an impairment to the carrying value of goodwill in future periods. A secondary approach used in the valuation was a market approach which included a comparison of implied earnings multiples of CP US to trading earnings multiples of comparable companies, adjusted for the inherent minority discount. The derived value of CP US using the income approach fell within the range of the observable trading multiples. The income approach was chosen over the market approach as it takes into consideration the particular characteristics attributable to CP US.

The carrying value of CP's goodwill changes from period to period due to changes in the exchange rate. As at December 31, 2009 goodwill was $154.9 million (2008 – $179.6 million).

Intangible assets of $47.4 million (2008 – $57.6 million), acquired in the acquisition of DM&E, includes the amortized costs of an option to expand the track network, favourable leases, customer relationships and interline contracts. Intangible assets with determinable lives are amortized on a straight-line basis over their estimated useful lives. Intangible assets with indefinite lives are not amortized but are assessed for impairment on an annual basis, or more often if the events or circumstances warrant. If the carrying value of the indefinite-lived intangible asset exceeds its fair value, an impairment charge would be recognized immediately.

23.0 Systems, Procedures and Controls

The Company's Chief Executive Officer and Chief Financial Officer are responsible for establishing and maintaining disclosure controls and procedures (as defined in Rules 13a-15(e) and 15d-15(e) of the US Securities Exchange Act of 1934 (as amended)) to ensure that material information relating to the Company is made known to them. The Chief Executive Officer and Chief Financial Officer have a process to evaluate these disclosure controls and are satisfied that they are effective for ensuring that such material information is made known to them.

24.0 Forward-Looking Information

This MD&A, especially but not limited to Section 24, contains certain forward-looking statements within the meaning of the *Private Securities Litigation Reform Act of 1995* (US) and other relevant securities legislation relating but not limited to our operations, anticipated financial performance, business prospects and strategies. Forward-looking information typically contains statements with words such as "anticipate", "believe", "expect", "plan" or similar words suggesting future outcomes.

Readers are cautioned to not place undue reliance on forward-looking information because it is possible that we will not achieve predictions, forecasts, projections and other forms of forward-looking information. In addition, except as required by law, we undertake no obligation to update publicly or otherwise revise any forward-looking information, whether as a result of new information, future events or otherwise.

By its nature, our forward-looking information involves numerous assumptions, inherent risks and uncertainties, including but not limited to the following factors: changes in business strategies; general North American and global economic and business conditions; the availability and price of energy commodities; the effects of competition and pricing pressures; industry capacity; shifts in market demands; changes in laws and regulations, including regulation of rates; changes in taxes and tax rates; potential increases in maintenance and operating costs; uncertainties of litigation; labour disputes; risks and liabilities arising from derailments; timing of completion of capital and maintenance projects; currency and interest rate fluctuations; effects of changes in market conditions on the financial position of pension plans and liquidity of investments; various events that could disrupt operations, including severe weather conditions; security threats and governmental response to them; and technological changes.

There are more specific factors that could cause actual results to differ materially from those described in the forward-looking statements contained in this MD&A. These more specific factors are identified and discussed in Section 21.0 Business Risks and Enterprise Risk Management and elsewhere in this MD&A.

24.1 2009 FINANCIAL OUTLOOK

CP provided limited guidance for 2009 due to economic uncertainty. Guidance was given for 2009 Capital expenditures ranging from $800-$820 million on November 13, 2008. The 2009 outlook assumed an average foreign exchange rate of $1.25 per US dollar (US$0.80) as of January 27, 2009.

24.1.1 First-Quarter 2009 Guidance Updates

CP updated our guidance. Expectations for capital expenditures were reduced by approximately $90 million and were expected to range from $720 million to $740 million for 2009. The assumed average foreign exchange rate of $1.25 (US$0.80) remained unchanged.

24.1.2 Second-Quarter 2009 Guidance Updates

CP revised our expectations for the capital program in 2009 to be in the range of $800 million to $820 million, an increase from the previous outlook of $720 million to $740 million. This increase was due to a buyout of operating leases and it was anticipated that the increased cash outlay will be offset by the proceeds from the sale of other equipment in the latter half of 2009.

24.1.3 Variance from 2009 Guidance

CP's capital program for 2009 was $722.4 million as measured by "Additions to properties" on the Consolidated Statement of Cash Flows. The variance from guidance previously provided was mainly due to the change in accounting policy for locomotive overhauls which are now expensed (discussed further in Section 13.1.4 Locomotive Overhauls) and changes in the economic climate.

24.2 2010 FINANCIAL ASSUMPTIONS

Capital expenditures are currently estimated to range from $680 million to $730 million on a Canadian GAAP basis. CP expects its tax rate to be in the 25% to 27% range. The 2010 pension contributions are currently estimated to be between $150 and $200 million (discussed further in Section 20.5 Pension Plan Deficit). Undue reliance should not be placed on these assumptions and other forward-looking information.

25.0 Glossary of Terms

"Average active employees – expense" The average number of actively employed workers during the period whose compensation costs are included in Compensation and Benefits Expense on the Consolidated Statement of Income. This includes employees who are taking vacation and statutory holidays and other forms of short-term paid leave, and excludes individuals who have a continuing employment relationship with us but are not currently working or who have not worked a minimum number of hours. This definition also excludes employees working on capital projects.

"Average terminal dwell" The average time a freight car resides at a specified terminal location. The timing starts with a train arriving in the terminal, a customer releasing the car to us, or a car arriving that is to be transferred to another railway. The timing ends when the train leaves, a customer receives the car from us or the freight car is transferred to another railway. Freight cars are excluded if: i) a train is moving through the terminal without stopping; ii) they are being stored at the terminal; iii) they are in need of repair; or iv) they are used in track repairs.

"Average train speed" The average speed attained as a train travels between terminals, calculated by dividing the total train miles traveled by the total hours operated. This calculation does not include the travel time or the distance traveled by: i) trains used in or around CP's yards; ii) passenger trains; and iii) trains used for repairing track. The calculation also does not include the time trains spend waiting in terminals.

"Car miles per car day" The total car-miles for a period divided by the total number of active cars. Total car-miles includes the distance travelled by every car on a revenue-producing train and a train used in or around our yards.

A car-day is assumed to equal one active car-day. An active car is a revenue-producing car that is generating costs to CP on an hourly or mileage basis. Excluded from this count are i) cars that are not on the track or are being stored; ii) cars that are in need of repair; iii) cars that are used to carry materials for track repair; iv) cars owned by customers that are on the customer's tracks; and v) cars that are idle and waiting to be reclaimed by CP.

"Carloads" Revenue-generating shipments of containers, trailers and freight cars.

"Casualty expenses" Includes costs associated with personal injuries, freight and property damages, and environmental mishaps.

"CP", "the Company" CPRL, CPRL and its subsidiaries, CPRL and one or more of its subsidiaries, or one or more of CPRL's subsidiaries.

"CPRL" Canadian Pacific Railway Limited.

"D&H" Delaware and Hudson Railway Company, Inc., a wholly owned indirect US subsidiary of CPRL.

"DM&E" Dakota, Minnesota & Eastern Railroad Corporation.

"Fluidity" Obtaining more value from our existing assets and resources.

"Foreign Exchange" or "FX" The value of the Canadian dollar relative to the US dollar (exclusive of any impact on market demand).

"FRA" US Federal Railroad Administration, a regulatory agency whose purpose is to promulgate and enforce rail safety regulations; administer railroad assistance programs; conduct research and development in support of improved railroad safety and national rail transportation policy; provide for the rehabilitation of Northeast Corridor rail passenger service; and consolidate government support of rail transportation activities.

"FRA personal injury rate per 200,000 employee-hours" The number of personal injuries, multiplied by 200,000 and divided by total employee-hours. Personal injuries are defined as injuries that require employees to lose time away from work, modify their normal duties or obtain medical treatment beyond minor first aid. Employee-hours are the total hours worked, excluding vacation and sick time, by all employees, excluding contractors.

"FRA train accidents rate" The number of train accidents, multiplied by 1,000,000 and divided by total train-miles. Train accidents included in this metric meet or exceed the FRA reporting threshold of US$8,900 in the US or $11,000 in Canada in damage.

"Freight revenue per carload" The amount of freight revenue earned for every carload moved, calculated by dividing the freight revenue for a commodity by the number of carloads of the commodity transported in the period.

"Freight revenue per RTM" The amount of freight revenue earned for every RTM moved, calculated by dividing the total freight revenue by the total RTMs in the period.

"GAAP" Canadian generally accepted accounting principles.

"GTMs" or "gross ton-miles" The movement of total train weight over a distance of one mile. Total train weight is comprised of the weight of the freight cars, their contents and any inactive locomotives. An increase in GTMs indicates additional workload.

"IOP" Integrated Operating Plan, the foundation for our scheduled railway operations.

"LIBOR" London Interbank Offered Rate.

"Operating income" Calculated as revenues less operating expenses and is a common measure of profitability used by management.

"Operating ratio" The ratio of total operating expenses to total revenues. A lower percentage normally indicates higher efficiency.

"RTMs" or "revenue ton-miles" The movement of one revenue-producing ton of freight over a distance of one mile.

"Soo Line" Soo Line Railroad Company, a wholly owned indirect US subsidiary of CPRL.

"STB" US Surface Transportation Board, a regulatory agency with jurisdiction over railway rate and service issues and rail restructuring, including mergers and sales.

"US gallons of locomotive fuel consumed per 1,000 GTMs" The total fuel consumed in freight and yard operations for every 1,000 GTMs traveled. This is calculated by dividing the total amount of fuel issued to our locomotives, excluding commuter and non-freight activities, by the total freight-related GTMs. The result indicates how efficiently we are using fuel.

"WCB" Workers' Compensation Board, a mutual insurance corporation providing workplace liability and disability insurance in Canada.

CONSOLIDATED FINANCIAL STATEMENTS

December 31, 2009

Except where otherwise indicated, all financial information reflected herein is expressed in Canadian dollars

MANAGEMENT'S RESPONSIBILITY FOR FINANCIAL REPORTING

The information in this report is the responsibility of management. The consolidated financial statements have been prepared by management in accordance with Canadian generally accepted accounting principles ("GAAP") and include some amounts based on management's best estimates and careful judgment. The consolidated financial statements include the accounts of Canadian Pacific Railway Limited, Canadian Pacific Railway Company and all of its subsidiaries (the "Company"). The financial information of the Company included in the Company's Annual Report is consistent with that in the consolidated financial statements. The consolidated financial statements have been approved by the Board of Directors.

Our Board of Directors is responsible for reviewing and approving the consolidated financial statements and for overseeing management's performance of its financial reporting responsibilities. The Board of Directors carries out its responsibility for the consolidated financial statements principally through its Audit, Finance and Risk Management Committee (the "Audit Committee"), consisting of six members, all of whom are independent directors. The Audit Committee reviews the consolidated financial statements with management and the independent auditors prior to submission to the Board for approval. The Audit Committee meets regularly with management, internal auditors, and the independent auditors to review accounting policies, and financial reporting. The Audit Committee also reviews the recommendations of both the independent and internal auditors for improvements to internal controls, as well as the actions of management to implement such recommendations. The internal and independent auditors have full access to the Audit Committee, with or without the presence of management.

MANAGEMENT'S REPORT ON INTERNAL CONTROL OVER FINANCIAL REPORTING

Management is responsible for establishing and maintaining adequate internal control over financial reporting for the Company. The internal control system was designed to provide reasonable assurance to the Company's management regarding the preparation and presentation of the Consolidated Financial Statements. Because of its inherent limitations, internal control over financial reporting may not prevent or detect misstatements. Also, projections of any evaluation of effectiveness to future periods are subject to the risk that controls may become inadequate because of changes in conditions, or that the degree of compliance with the policies or procedures may deteriorate.

Management has assessed the effectiveness of the Company's internal controls over financial reporting in accordance with the criteria set forth by the Committee of Sponsoring Organizations of the Treadway Commission in "Internal Control-Integrated Framework". Based on this assessment, management determined that the Company's internal control over financial reporting was effective as at December 31, 2009.

The effectiveness of the Company's internal control over financial reporting as well as the Consolidated Financial Statements as of December 31, 2009 have been audited by PricewaterhouseCoopers LLP, independent auditors, as stated in their report, which is included herein.

KATHRYN B. MCQUADE
Executive Vice-President and
Chief Financial Officer

February 25, 2010

FRED J. GREEN
Chief Executive Officer

INDEPENDENT AUDITORS' REPORT

TO THE SHAREHOLDERS OF
CANADIAN PACIFIC RAILWAY LIMITED

We have completed integrated audits of Canadian Pacific Railway Limited's 2009, 2008 and 2007 consolidated financial statements and of its internal control over financial reporting as at December 31, 2009. Our opinions, based on our audits, are presented below.

CONSOLIDATED FINANCIAL STATEMENTS

We have audited the accompanying consolidated balance sheet of Canadian Pacific Railway Limited as at December 31, 2009 and December 31, 2008, and the related consolidated statements of income, comprehensive income, cash flows and changes in shareholders' equity for each of the years in the three year period ended December 31, 2009. These financial statements are the responsibility of the Company's management. Our responsibility is to express an opinion on these financial statements based on our audits.

We conducted our audits of the Company's financial statements in accordance with Canadian generally accepted auditing standards and the standards of the Public Company Accounting Oversight Board (United States). Those standards require that we plan and perform an audit to obtain reasonable assurance about whether the financial statements are free of material misstatement. An audit of financial statements includes examining, on a test basis, evidence supporting the amounts and disclosures in the financial statements. A financial statement audit also includes assessing the accounting principles used and significant estimates made by management, and evaluating the overall financial statement presentation. We believe that our audits provide a reasonable basis for our opinion.

In our opinion, the consolidated financial statements referred to above present fairly, in all material respects, the financial position of the Company as at December 31, 2009 and December 31, 2008 and the results of its operations and its cash flows for each of the years in the three year period ended December 31, 2009 in accordance with Canadian generally accepted accounting principles.

INTERNAL CONTROL OVER FINANCIAL REPORTING

We have also audited Canadian Pacific Railway Limited's internal control over financial reporting as at December 31, 2009, based on criteria established in Internal Control – Integrated Framework issued by the Committee of Sponsoring Organizations of the Treadway Commission (COSO). The Company's management is responsible for maintaining effective internal control over financial reporting and for its assessment of the effectiveness of internal control over financial reporting, included in the accompanying Management's Report on Internal Control over Financial Reporting. Our responsibility is to express an opinion on the Company's internal control over financial reporting based on our audit.

We conducted our audit of internal control over financial reporting in accordance with the standards of the Public Company Accounting Oversight Board (United States). Those standards require that we plan and perform the audit to obtain reasonable assurance about whether effective internal control over financial reporting was maintained in all material respects. An audit of internal control over financial reporting includes obtaining an understanding of internal control over financial reporting, assessing the risk that a material weakness exists, testing and evaluating the design and operating effectiveness of internal control based on the assessed risk, and performing such other procedures as we consider necessary in the circumstances. We believe that our audit provides a reasonable basis for our opinion.

A company's internal control over financial reporting is a process designed to provide reasonable assurance regarding the reliability of financial reporting and the preparation of financial statements for external purposes in accordance with generally accepted accounting principles. A company's internal control over financial reporting includes those policies and procedures that (i) pertain to the maintenance of records that, in reasonable detail, accurately and fairly reflect the transactions and dispositions of the assets of the company; (ii) provide reasonable assurance that transactions are recorded as necessary to permit preparation of financial statements in accordance with generally accepted accounting principles, and that receipts and expenditures of the company are being made only in accordance with authorizations of management and directors of the company; and (iii) provide reasonable assurance regarding prevention or timely detection of unauthorized acquisition, use, or disposition of the company's assets that could have a material effect on the financial statements.

Because of its inherent limitations, internal control over financial reporting may not prevent or detect misstatements. Also, projections of any evaluation of effectiveness to future periods are subject to the risk that controls may become inadequate because of changes in conditions, or that the degree of compliance with the policies or procedures may deteriorate.

In our opinion, the Company maintained, in all material respects, effective internal control over financial reporting as at December 31, 2009 based on criteria established in Internal Control – Integrated Framework issued by the COSO.

PricewaterhouseCoopers LLP

PRICEWATERHOUSECOOPERS LLP
Chartered Accountants
Calgary, Alberta

February 25, 2010

COMMENTS BY AUDITORS FOR U.S. READERS ON CANADA – U.S. REPORTING DIFFERENCES

In the United States, reporting standards for auditors require the addition of an explanatory paragraph (following the opinion paragraph) when there is a change in accounting principles that has a material effect on the comparability of the Company's financial statements, such as the changes described in note 2 to the consolidated financial statements. Our report to the shareholders dated February 25, 2010 is expressed in accordance with Canadian reporting standards, which do not require a reference to such a change in accounting principles in the Independent Auditors' Report when the change is adequately disclosed in the financial statements.

PricewaterhouseCoopers LLP

PRICEWATERHOUSECOOPERS LLP
Chartered Accountants
Calgary, Alberta

February 25, 2010

CONSOLIDATED STATEMENT OF INCOME

Year ended December 31 (in millions of Canadian dollars, except per share data)	2009	2008 Restated (Note 2)	2007 Restated (Note 2)
Revenues			
Freight	**$ 4,175.2**	$ 4,814.8	$ 4,555.2
Other	**128.0**	116.8	152.4
	4,303.2	4,931.6	4,707.6
Operating expenses			
Compensation and benefits	**1,275.2**	1,306.1	1,275.0
Fuel	**580.2**	1,005.8	746.8
Materials	**215.1**	252.3	252.2
Equipment rents	**184.8**	182.2	207.5
Depreciation and amortization	**488.9**	442.5	427.5
Purchased services and other	**658.9**	701.0	637.8
	3,403.1	3,889.9	3,546.8
Revenues less operating expenses	**900.1**	1,041.7	1,160.8
Gain on sales of partnership interest and significant properties (Note 4)	**160.3**	–	–
Equity income in Dakota, Minnesota & Eastern Railroad Corporation (Note 15)	**–**	50.9	11.2
Less:			
Loss on termination of lease with shortline railway (Note 5)	**54.5**	–	–
Other income and charges (Note 6)	**18.9**	88.4	(118.7)
Net interest expense (Note 7)	**273.1**	261.1	204.3
Income before income tax expense	**713.9**	743.1	1,086.4
Income tax expense (Note 8)	**101.5**	135.9	154.3
Net income	**$ 612.4**	$ 607.2	$ 932.1
Basic earnings per share (Note 9)	**$ 3.68**	$ 3.95	$ 6.05
Diluted earnings per share (Note 9)	**$ 3.67**	$ 3.91	$ 5.99

Certain of the comparative figures have been reclassified in order to be consistent with the 2009 presentation.

See Notes to Consolidated Financial Statements.

CONSOLIDATED STATEMENT OF COMPREHENSIVE INCOME

Year ended December 31 (in millions of Canadian dollars)	**2009**	2008 Restated (Note 2)	2007 Restated (Note 2)
Comprehensive income			
Net income	**$ 612.4**	$ 607.2	$ 932.1
Net (loss) gain in foreign currency translation adjustments, net of hedging activities	**(1.9)**	7.6	(6.0)
Change in derivatives designated as cash flow hedges	**7.3**	(16.1)	(36.8)
Other comprehensive income (loss) before income taxes	**5.4**	(8.5)	(42.8)
Income tax (expense) recovery	**(33.6)**	44.8	3.4
Other comprehensive (loss) income (Note 10)	**(28.2)**	36.3	(39.4)
Comprehensive income	**$ 584.2**	$ 643.5	$ 892.7

See Notes to Consolidated Financial Statements.

CONSOLIDATED BALANCE SHEET

As at December 31 (in millions of Canadian dollars)	2009	2008 Restated (Note 2)
Assets		
Current assets		
Cash and cash equivalents (Note 11)	**$ 679.1**	$ 117.6
Accounts receivable (Note 12)	**441.0**	647.4
Materials and supplies	**132.7**	215.8
Future income taxes (Note 8)	**128.1**	76.5
Other	**46.5**	65.7
	1,427.4	1,123.0
Investments (Note 13)	**156.7**	151.1
Net properties (Note 14)	**11,967.8**	12,384.6
Assets held for sale	**–**	39.6
Goodwill and intangible assets (Note 17)	**202.3**	237.2
Prepaid pension costs and other assets (Note 16)	**1,777.2**	1,221.8
Total assets	**$ 15,531.4**	$ 15,157.3
Liabilities and shareholders' equity		
Current liabilities		
Short-term borrowing	**$ –**	$ 150.1
Accounts payable and accrued liabilities	**917.3**	1,034.9
Income and other taxes payable	**31.9**	42.2
Dividends payable	**41.7**	38.1
Long-term debt maturing within one year (Note 18)	**392.1**	44.0
	1,383.0	1,309.3
Other long-term liabilities (Note 20)	**790.2**	865.2
Long-term debt (Note 18)	**4,102.7**	4,685.8
Future income taxes (Note 8)	**2,549.5**	2,527.6
Shareholders' equity		
Share capital (Note 23)	**1,746.4**	1,220.8
Contributed surplus (Note 23)	**33.5**	40.2
Accumulated other comprehensive income (Note 10)	**49.5**	77.7
Retained income	**4,876.6**	4,430.7
	6,706.0	5,769.4
Total liabilities and shareholders' equity	**$ 15,531.4**	$ 15,157.3

Commitments and contingencies (Note 28)

Certain of the comparative figures have been reclassified in order to be consistent with the 2009 presentation.

See Notes to Consolidated Financial Statements.

Approved on behalf of the Board:

J.E. Cleghorn, Director, Chairman of the Board

M.W. Wright, Director, Chairman of the Audit, Finance and Risk Management Committee

CONSOLIDATED STATEMENT OF CASH FLOWS

Year ended December 31 (in millions of Canadian dollars)	2009	2008 Restated (Note 2)	2007 Restated (Note 2)
Operating activities			
Net income	**$ 612.4**	$ 607.2	$ 932.1
Reconciliation of net income to cash provided by operating activities:			
Depreciation and amortization	**488.9**	442.5	427.5
Future income taxes (Note 8)	**153.2**	156.3	48.3
(Gain) loss in fair value of long-term floating rate notes/ asset-backed commercial paper (Note 19)	**(6.3)**	49.4	21.5
Foreign exchange (gain) loss on long-term debt	**(5.8)**	16.3	(169.8)
Amortization and accretion charges	**9.5**	10.1	12.1
Equity income, net of cash received (Note 15)	**0.5**	(50.8)	(12.9)
Gain on sales of partnership interest and significant properties (Note 4)	**(160.3)**	–	–
Net loss on repurchase of debt (Note 18)	**16.6**	–	–
Restructuring and environmental remediation payments (Note 22)	**(45.1)**	(53.4)	(61.0)
Pension funding in excess of expense	**(589.0)**	(53.2)	(28.8)
Other operating activities, net	**(25.8)**	27.5	57.0
Change in non-cash working capital balances related to operations (Note 24)	**102.7**	(132.2)	50.3
Cash provided by operating activities	**551.5**	1,019.7	1,276.3
Investing activities			
Additions to properties (Note 14)	**(722.4)**	(832.9)	(836.0)
Additions to assets held for sale and other	**–**	(222.5)	(19.2)
Investment in Dakota, Minnesota & Eastern Railroad Corporation (Note 15)	**–**	(8.6)	(1,492.6)
Proceeds from sale of properties and other assets (Note 4)	**243.8**	257.6	34.3
Redemption of long-term floating rate notes/ (investment in) asset-backed commercial paper (Note 19)	**12.5**	–	(143.6)
Other, net	**7.4**	9.7	–
Cash used in investing activities	**(458.7)**	(796.7)	(2,457.1)
Financing activities			
Dividends paid	**(162.9)**	(148.7)	(133.1)
Issuance of CP Common Shares (Note 23)	**513.5**	19.7	30.4
Purchase of CP Common Shares (Note 23)	**–**	–	(231.1)
Net (decrease) increase in short-term borrowing	**(150.1)**	(79.6)	229.7
Issuance of long-term debt (Note 18)	**872.7**	1,068.7	1,745.3
Repayment of long-term debt (Note 18)	**(618.6)**	(1,340.7)	(187.7)
Settlement of treasury rate lock (Note 19)	**–**	(30.9)	–
Settlement of foreign exchange forward on long-term debt (Note 19)	**34.1**	–	–
Cash provided by (used in) financing activities	**488.7**	(511.5)	1,453.5
Effect of foreign currency fluctuations on U.S. dollar-denominated cash and cash equivalents	**(20.0)**	28.0	(18.9)
Cash position			
Increase (decrease) in cash and cash equivalents	**561.5**	(260.5)	253.8
Cash and cash equivalents at beginning of year	**117.6**	378.1	124.3
Cash and cash equivalents at end of year (Note 11)	**$ 679.1**	$ 117.6	$ 378.1

Certain of the comparative figures have been reclassified in order to be consistent with the 2009 presentation.

See Notes to Consolidated Financial Statements.

CONSOLIDATED STATEMENT OF CHANGES IN SHAREHOLDERS' EQUITY

(in millions of Canadian dollars)	Share capital	Contributed surplus	Accumulated other comprehensive income	Retained income	Total Shareholders' equity
Balance at December 31, 2006, as previously reported	$ 1,175.7	$ 32.3	$ 80.4	$ 3,586.1	$ 4,874.5
Adjustment for change in accounting policies (Note 2)			0.4	(197.5)	(197.1)
Balance at December 31, 2006, as restated	1,175.7	32.3	80.8	3,388.6	4,677.4
Net income				932.1	932.1
Other comprehensive income (loss)			(39.4)		(39.4)
Dividends declared				(138.4)	(138.4)
Shares purchased (Note 23)	(24.5)			(206.6)	(231.1)
Stock compensation expense		11.3			11.3
Shares issued under stock option plans	37.4	(1.2)			36.2
Balance at December 31, 2007	1,188.6	42.4	41.4	3,975.7	5,248.1
Net income				607.2	607.2
Other comprehensive income (loss)			36.3		36.3
Dividends declared				(152.2)	(152.2)
Stock compensation expense		7.8			7.8
Shares issued under stock option plans	32.2	(10.0)			22.2
Balance at December 31, 2008	1,220.8	40.2	77.7	4,430.7	5,769.4
Net income				612.4	612.4
Other comprehensive income (loss)			(28.2)		(28.2)
Dividends declared				(166.5)	(166.5)
Shares issued (Note 23)	495.2				495.2
Stock compensation (recovery) expense		(1.6)			(1.6)
Shares issued under stock option plans	30.4	(5.1)			25.3
Balance at December 31, 2009	$ 1,746.4	$ 33.5	$ 49.5	$ 4,876.6	$ 6,706.0

See Notes to Consolidated Financial Statements.

NOTES TO CONSOLIDATED FINANCIAL STATEMENTS

December 31, 2009

1 Summary of significant accounting policies

CANADIAN GENERALLY ACCEPTED ACCOUNTING PRINCIPLES ("GAAP")

These consolidated financial statements are expressed in Canadian dollars and have been prepared in accordance with Canadian GAAP.

PRINCIPLES OF CONSOLIDATION

These consolidated financial statements include the accounts of Canadian Pacific Railway Limited ("CPRL") and all of its subsidiaries and the proportionate share of the accounts of a jointly controlled enterprise (collectively referred to as "CP" or "the Company"). The Company's investments in which it has significant influence are accounted for using the equity method.

USE OF ESTIMATES

The preparation of these consolidated financial statements in conformity with GAAP requires management to make estimates and assumptions that affect the reported amounts of revenues and expenses during the period, the reported amounts of assets and liabilities, and the disclosure of contingent assets and liabilities at the date of the financial statements. Management regularly reviews its estimates, including those related to investments, restructuring and environmental liabilities, pensions and other benefits, depreciable lives of properties and intangible assets, future income tax assets and liabilities, as well as legal and personal injury liabilities based upon currently available information. Actual results could differ from these estimates.

PRINCIPAL SUBSIDIARIES

The following list sets out CPRL's principal railway operating subsidiaries, including the jurisdiction of incorporation. All these subsidiaries are wholly owned, directly or indirectly, by CPRL as of December 31, 2009.

Principal subsidiary	Incorporated under the laws of
Canadian Pacific Railway Company	Canada
Soo Line Railroad Company ("Soo Line")	Minnesota
Delaware and Hudson Railway Company, Inc. ("D&H")	Delaware
Dakota, Minnesota & Eastern Railroad Corporation ("DM&E")	Delaware
Mount Stephen Properties Inc. ("MSP")	Canada

REVENUE RECOGNITION

Railway freight revenues are recognized based on the percentage of completed service method. The allocation of revenue between reporting periods is based on the relative transit time in each reporting period with expenses recognized as incurred. Other revenue is recognized as service is performed or contractual obligations are met. Volume rebates are accrued as a reduction of freight revenues based on estimated volumes and contract terms as freight service is provided.

CASH AND CASH EQUIVALENTS

Cash and cash equivalents includes highly-liquid short-term investments that are readily convertible to cash with original maturities of three months or less.

FOREIGN CURRENCY TRANSLATION

Assets and liabilities denominated in foreign currencies, other than those held through self-sustaining foreign subsidiaries, are translated into Canadian dollars at the year-end exchange rate for monetary items and at the historical exchange rates for non-monetary items. Foreign currency revenues and expenses are translated at the exchange rate in effect on the dates of the related transactions. Foreign currency gains and losses, other than those arising from the translation of the Company's net investment in self-sustaining foreign subsidiaries, are included in income.

The accounts of the Company's self-sustaining foreign subsidiaries are translated into Canadian dollars using the year-end exchange rate for assets and liabilities and the average exchange rates during the year for revenues and expenses. Exchange gains and losses arising from translation of these foreign subsidiaries' accounts are included in "Other comprehensive income (loss)". A portion of the U.S. dollar-denominated long-term debt has been designated as a hedge of the net investment in self-sustaining foreign subsidiaries. As a result, unrealized foreign exchange gains and losses on a portion of the U.S. dollar-denominated long-term debt are offset against foreign exchange gains and losses arising from translation of self-sustaining foreign subsidiaries' accounts.

PENSIONS AND OTHER BENEFITS

Pension costs are actuarially determined using the projected-benefit method prorated over the credited service periods of employees. This method incorporates management's best estimates of expected plan investment performance, salary escalation and retirement ages of employees. The expected return on fund assets is calculated using market-related asset values developed from a five-year average of market values for the fund's public equity securities (with each prior year's market value adjusted to the current date for assumed investment income during the intervening period) plus the market value of the fund's fixed income, real estate and infrastructure securities, subject to the market-related asset value not being greater than 120% of the market value nor being less than 80% of the market value. The discount rate used to determine the benefit obligation is based on market interest rates on high-quality corporate debt instruments with matching cash flows. Unrecognized actuarial gains and losses in excess of 10% of the greater of the benefit obligation and the market-related value of plan assets are amortized over the expected average remaining service period of active employees expected to receive benefits under the plan (approximately 10 years). Prior service costs arising from collectively bargained amendments to pension plan benefit provisions are amortized over the term of the applicable union agreement (see Note 2 for further detail). Prior service costs arising from all other sources are amortized over the expected average remaining service period of active employees who were expected to receive benefits under the plan at the date of amendment. Transitional assets and obligations, which arose from implementing the CICA Accounting Standard Section 3461 "Employee Future Benefits" effective January 1, 2000, are being amortized over the expected average remaining service period of active employees who were expected to receive benefits under the plan at January 1, 2000 (13 years).

Benefits other than pensions, including post-retirement health care and life insurance, and some workers' compensation and long-term disability benefits in Canada, are actuarially determined and accrued on a basis similar to pension costs.

MATERIALS AND SUPPLIES

Materials and supplies on hand are valued at the lower of average cost and net realizable value.

PROPERTIES

Fixed asset additions and major renewals are recorded at cost, including direct costs, attributable indirect costs and carrying costs, less accumulated depreciation and any impairments. The Company capitalizes development costs for major new computer systems, including the related variable indirect costs. In addition, CP capitalizes the cost of large refurbishments. When there is a legal obligation associated with the retirement of property, plant and equipment, a liability is initially recognized at its fair value and a corresponding asset retirement cost is added to the gross book value of the related asset and amortized to expense over the estimated term to retirement. The Company reviews the carrying amounts of its properties whenever changes in circumstances indicate that such carrying amounts may not be recoverable based on future undiscounted cash flows. When such properties are determined to be impaired, recorded asset values are revised to the fair value.

The Company follows group depreciation which groups assets which are similar in nature and have similar economic lives. The property groups are depreciated based on their expected economic lives determined by studies of historical retirements of properties in the group and engineering estimates of changes in current operations and of technological advances. Actual use and retirement of assets may vary from current estimates, which would impact the amount of depreciation expense recognized in future periods.

For the sale or retirement of larger groups of depreciable assets that are unusual and were not considered in depreciation studies, CP records a gain or loss for the difference between net proceeds and net book value of the assets sold.

When depreciable property is retired or otherwise disposed of in the normal course of business, the book value, less net salvage proceeds, is charged to accumulated depreciation and if different than the assumptions under the depreciation study could potentially result in adjusted depreciation expense over a period of years. However, when removal costs exceed the salvage value on assets and the Company had no legal obligation to remove, the net removal cost is charged to income in the period in which the asset is removed and is not charged to accumulated depreciation.

The Company constructs much of its new and replacement properties. The Company divides maintenance expenditures between additions to properties and operating expenses based on whether the expenditures increase the output or service capacity, lower the associated operating costs or extend the useful life of the properties and whether the expenditures exceed minimum physical and financial thresholds. Locomotive overhauls are expensed as incurred *(Note 2)*.

Depreciation is calculated on the straight-line basis at rates based on the estimated service life, taking into consideration the projected annual usage of depreciable property, except for rail and other track material in the U.S., which is based on expected usage.

Equipment under capital lease is included in properties and depreciated over the period of expected use.

ASSETS HELD FOR SALE

Assets to be disposed of are reported at the lower of the carrying amount and fair value, less costs to sell, and are no longer depreciated.

GOODWILL

Goodwill represents the excess of the purchase price over the fair value of identifiable net assets upon acquisition of a business. Goodwill is assigned to the reporting units that are expected to benefit from the business acquisition which after the integration of operations with the railway network may be different than the acquired business.

The carrying value of goodwill, which is not amortized, is assessed for impairment annually in the fourth quarter of each year, or more frequently as economic events dictate. The fair value of the reporting unit is compared to its carrying value, including goodwill. If the fair value of the reporting unit is less than its carrying value goodwill is potentially impaired. The impairment charge that would be recognized is the excess of the carrying value of the goodwill over the fair value of the goodwill, determined in the same manner as in a business combination.

INTANGIBLE ASSETS

Intangible assets with finite lives are amortized on a straight-line basis over the estimated useful lives of the respective assets. An option to expand the track network on DM&E has an amortization period of 100 years. Favourable leases, customer relationships and interline contracts have amortization periods ranging from four to 20 years. When there is a change in the estimated useful life of an intangible asset with a finite life, amortization is adjusted prospectively.

Intangible assets subject to amortization are tested for impairment whenever changes in circumstances warrant an analysis of the recoverability of these assets. If an impairment exists, the carrying value of these assets would be adjusted to fair value and an impairment charge recorded in income.

FINANCIAL INSTRUMENTS

Financial instruments are any contract that gives rise to a financial asset of one party and a financial liability or equity instrument of another party.

Financial instruments are recognized initially at fair value, which is the amount of consideration that would be agreed upon in an arm's length transaction between willing parties.

Subsequent measurement depends on how the financial instrument has been classified. Accounts receivable and investments, classified as loans and receivables, are measured at amortized cost using the effective interest rate method. Certain equity investments, classified as available for sale, are recognized at cost as fair value cannot be reliably established. Cash and cash equivalents, long-term floating rate notes, and asset-backed commercial paper ("ABCP") are classified as held for trading and are measured at fair value. Accounts payable, accrued liabilities, short-term borrowings, dividends payable, other long-term liabilities and long-term debt, classified as financial liabilities, are also measured at amortized cost. The Company combines transaction costs and premiums or discounts directly attributable to the issuance of long-term debt with the initial fair value of the debt and amortizes these amounts to earnings using the effective interest method.

DERIVATIVE FINANCIAL INSTRUMENTS

Derivative financial instruments may be used from time to time by the Company to manage its exposure to risks relating to foreign currency exchange rates, stock-based compensation, interest rates and fuel prices. When CP utilizes derivative instruments in hedging relationships, CP identifies, designates and documents those hedging transactions and regularly tests the transactions to demonstrate effectiveness in order to continue hedge accounting.

All derivative instruments are classified as held for trading and recorded at their fair value. Any change in the fair value of derivatives not designated as hedges is recognized in the period in which the change occurs in the Consolidated Statement of Income in the line item to which the derivative instrument is related. On the Consolidated Balance Sheet they are classified in "Prepaid pension costs and other assets", "Other long-term liabilities", "Other" current assets or "Accounts payable and accrued liabilities" as applicable. Gains and losses arising from derivative instruments affect the following income statement lines: "Revenues", "Compensation and benefits", "Fuel", "Other income and charges", and "Net interest expense".

For fair value hedges, the periodic change in value is recognized in income, on the same line as the changes in values of the hedged items are also recorded. For a cash flow hedge, the change in value of the effective portion is recognized in "Other comprehensive income (loss)". Any

ineffectiveness within an effective cash flow hedge is recognized in income as it arises in the same income account as the hedged item. Should a cash flow hedge relationship become ineffective, previously unrealized gains and losses remain within "Accumulated other comprehensive income" until the hedged item is settled and, prospectively, future changes in value of the derivative are recognized in income. The change in value of the effective portion of a cash flow hedge remains in "Accumulated other comprehensive income" until the related hedged item settles, at which time amounts recognized in "Accumulated other comprehensive income" are reclassified to the same income or balance sheet account that records the hedged item.

In the Consolidated Statement of Cash Flows, cash flows relating to derivative instruments designated as hedges are included in the same line as the related hedged item.

The Company from time to time enters into foreign exchange forward contracts to hedge anticipated sales in U.S. dollars, the related accounts receivable and future capital acquisitions. Foreign exchange translation gains and losses on foreign currency-denominated derivative financial instruments used to hedge anticipated U.S. dollar-denominated sales are recognized as an adjustment of the revenues when the sale is recorded. Those used to hedge future capital acquisitions are recognized as an adjustment of the property amount when the acquisition is recorded.

The Company also occasionally enters into foreign exchange forward contracts as part of its short-term cash management strategy. These contracts are not designated as hedges due to their short-term nature and are carried on the Consolidated Balance Sheet at fair value. Changes in fair value are recognized in income in the period in which the change occurs.

The Company enters into interest rate swaps to manage the risk related to interest rate fluctuations. These swap agreements require the periodic exchange of payments without the exchange of the principal amount on which the payments are based. Interest expense on the debt is adjusted to include the payments owing or receivable under the interest rate swaps.

The Company from time to time enters into bond forwards to fix interest rates for anticipated issuances of debt. These agreements are accounted for as cash flow hedges.

The Company has a fuel-hedging program under which CP acquires crude oil and / or diesel future contracts for a portion of its diesel fuel purchases to reduce the risk of price volatility affecting future cash flows. In addition, foreign exchange forward contracts may be used as part of the fuel-hedging program to manage the foreign exchange variability component of CP's fuel price risk. These agreements are accounted for as cash flow hedges. The gains or losses on the hedge contracts are applied against the corresponding fuel purchases in the period during which the hedging contracts mature.

The Company has entered into derivatives called Total Return Swaps ("TRS") to mitigate fluctuations in tandem stock appreciation rights ("TSAR"), deferred share units ("DSU"), and restricted share units ("RSU"). These are not designated as hedges and are recorded at market value with the offsetting gain or loss reflected in "Compensation and benefits".

RESTRUCTURING ACCRUAL AND ENVIRONMENTAL REMEDIATION

Restructuring liabilities are recorded at their present value. The discount related to liabilities incurred in 2003 and subsequent years is amortized to "Compensation and benefits" and "Purchased services and other" over the payment period. The discount related to liabilities incurred prior to 2003 is amortized to "Other income and charges" over the payment period. Environmental remediation accruals, recorded on an undiscounted basis, cover site-specific remediation programs. Provisions for labour restructuring and environmental remediation costs are recorded in "Other long-term liabilities", except for the current portion, which is recorded in "Accounts payable and accrued liabilities".

INCOME TAXES

The Company follows the liability method of accounting for income taxes. Future income tax assets and liabilities are determined based on differences between the financial reporting and tax bases of assets and liabilities using substantively enacted tax rates and laws that will be in effect when the differences are expected to reverse. The effect of a change in income tax rates on future income tax assets and liabilities is recognized in income in the period during which the change occurs.

EARNINGS PER SHARE

Basic earnings per share are calculated using the weighted average number of Common Shares outstanding during the year. Diluted earnings per share are calculated using the treasury stock method for determining the dilutive effect of options.

STOCK-BASED COMPENSATION

CP follows the fair value based approach to account for stock options. Compensation expense and an increase in contributed surplus are recognized for stock options over their vesting period, or over the period from the grant date to the date employees become eligible to retire when this is shorter than the vesting period, based on their estimated fair values on the grant date, as determined using the Black-Scholes option-pricing model.

With the granting of stock options, employees may be simultaneously granted Share Appreciation Rights ("SARs"), which provide the employee the choice to either exercise the stock option for shares, or to exercise the TSAR and thereby receive the intrinsic value of the stock option in cash. Options with TSARs are awards that may call for settlement in cash and, therefore, are recorded as liabilities. Changes in this liability, which arise from fluctuation in the market price of CP's common shares are recorded in compensation and benefits expense over the vesting period. If an employee chooses to exercise the option, thereby cancelling the TSAR, both the exercise price and the liability are settled to "Share capital".

Forfeitures and cancellations of options are accounted for when they occur except for tandem options where forfeitures are estimated on the grant date. Any consideration paid by employees on exercise of stock options is credited to share capital when the option is exercised and the recorded fair value of the option is removed from contributed surplus and credited to share capital.

Compensation expense is also recognized for TSARs, DSUs, PSUs and RSUs, using the intrinsic method, and employee share purchase plans, using the issue price, by amortizing the cost over the vesting period. Once fully vested, the liability for TSARs, DSUs, PSUs and RSUs are marked-to-market until exercised.

Forfeitures and cancellations of TSARs, DSUs, PSUs and RSUs are accounted for when they occur.

2 Accounting changes

PENSION PRIOR SERVICE COSTS

During 2009, CP changed its accounting policy for the treatment of prior service pension costs for unionized employees. In previous periods, CP had amortized these costs over the expected average remaining service period for employees. CP now amortizes these costs over the remaining contract term. The change in policy was made to provide more relevant information by amortizing the costs based on the contract term as CP generally renegotiates union contracts on a routine and consistent basis that is substantially shorter than the expected average remaining service period. The change has been accounted for on a retrospective basis. As a result of the change the following increases (decreases) to financial statement line items occurred:

	Year ended December 31			As at December 31		As at January 1
(in millions of Canadian dollars, except per share data)	**2009**	2008	2007	**2009**	2008	2007
Compensation and benefits	**$ 0.9**	$ 0.1	$ (10.1)			
Income tax expense	**1.2**	0.3	7.3			
Net income	**$ (2.1)**	$ (0.4)	$ 2.8			
Basic earnings per share	**$ (0.01)**	$ –	$ 0.02			
Diluted earnings per share	**$ (0.01)**	$ –	$ 0.02			
Prepaid pension costs and other assets				**$ (105.1)**	$ (104.2)	$ (114.2)
Future income tax liability				**(27.0)**	(28.2)	(35.8)
Retained income				**(78.1)**	(76.0)	(78.4)

LOCOMOTIVE OVERHAULS

During 2009, CP changed its accounting policy for the treatment of locomotive overhaul costs. In prior periods, CP had capitalized such costs and depreciated them over the expected economic life of the overhaul. These costs are now expensed to better represent the nature of overhaul expenditures on locomotives. This policy aligns the treatment of locomotive costs with CP's current operational practices, which have changed

over recent years and gradually shifted to be more in the nature of a repair. The change has been accounted for on a retrospective basis. As a result of the change, the following increases (decreases) to financial statement line items occurred:

	Year ended December 31			As at December 31		As at January 1
(in millions of Canadian dollars, except per share data)	**2009**	2008	2007	**2009**	2008	2007
Depreciation and amortization	**$ (43.5)**	$ (48.8)	$ (44.5)			
Compensation and benefits	**0.1**	0.5	0.9			
Materials	**13.8**	35.0	36.7			
Purchased services and other	**29.3**	23.8	19.6			
Total increases	**43.2**	59.3	57.2			
Total operating expenses	**(0.3)**	10.5	12.7			
Equity income in DM&E	**—**	(0.4)	(1.1)			
Income tax expense	**1.3**	(2.6)	2.5			
Net income	**$ (1.0)**	$ (8.3)	$ (16.3)			
Basic earnings per share	**$ (0.01)**	$ (0.05)	$ (0.11)			
Diluted earnings per share	**$ (0.01)**	$ (0.05)	$ (0.11)			
Other comprehensive income	**2.1**	(2.4)	1.4			
Comprehensive income	**$ 1.1**	$ (10.7)	$ (14.9)			
Cash provided by operating activities	**$ (43.2)**	$ (59.3)	$ (57.2)			
Cash used in investing activities	**$ 43.2**	$ 59.3	$ 57.2			
Net properties				**$ (187.9)**	$ (191.8)	$ (164.4)
Future income taxes liability				**(51.5)**	(54.3)	(52.6)
Accumulated other comprehensive income				**1.5**	(0.6)	0.4
Retained income				**(137.9)**	(136.9)	(112.2)

GOODWILL AND INTANGIBLE ASSETS

In February 2008, the Canadian Institute of Chartered Accountants ("CICA") issued accounting standard Section 3064 "Goodwill and intangible assets", replacing accounting standard Section 3062 "Goodwill and other intangible assets" and accounting standard Section 3450 "Research and development costs". Section 3064, which replaces Section 3062, establishes standards for the recognition, measurement, presentation and disclosure of goodwill subsequent to its initial recognition and of intangible assets by profit-oriented enterprises. Various changes have been made to other sections of the CICA Handbook for consistency purposes. The new Section was applicable to financial statements relating to fiscal years beginning on or after October 1, 2008. Accordingly, the Company adopted the new standards for its fiscal year beginning January 1, 2009. The provisions of Section 3064 were adopted retrospectively, with restatement of prior periods.

As a result of this adoption, the Company has retroactively expensed certain expenditures related to pre-operating periods of a facility, rather than recording them as assets in "Prepaid pension costs and other assets" and "Net properties". The adoption of Section 3064 resulted in a reduction to opening retained income of $6.9 million at January 1, 2007, $7.4 million at January 1, 2008 and $10.4 million at January 1, 2009. For the year ended December 31, 2008, the adoption of this section resulted in an increase to "Purchased services and other" expense of $5.0 million (2007 – $0.8 million), a decrease to "Income tax expense" of $2.0 million (2007 – $0.3 million), and a $0.02 (2007 – $nil) decrease to previously reported basic and diluted earnings per share.

CREDIT RISK AND THE FAIR VALUE OF FINANCIAL ASSETS AND FINANCIAL LIABILITIES

On January 20, 2009 the Emerging Issues Committee ("EIC") issued a new abstract EIC 173 "Credit risk and the fair value of financial assets and financial liabilities". This abstract concludes that an entity's own credit risk and the credit risk of the counterparty should be taken into account when determining the fair value of financial assets and financial liabilities, including derivative instruments.

This abstract applies to all financial assets and liabilities measured at fair value in interim and annual financial statements for periods ending on or after January 20, 2009. The adoption of this abstract did not impact the Company's financial statements.

FINANCIAL INSTRUMENTS – DISCLOSURES

The CICA amended Section 3862 "Financial Instruments – Disclosures", to include additional disclosures about fair value measurements and to enhance liquidity risk disclosures associated with financial instruments. This standard is effective for the annual period ending December 31, 2009. The adoption of this standard did not impact the amounts reported in the Company's financial statements as it relates to disclosure.

3 Future accounting changes

U.S. GAAP / INTERNATIONAL FINANCIAL REPORTING STANDARDS ("IFRS")

On February 13, 2008, the Canadian Accounting Standards Board ("AcSB") confirmed that publicly accountable enterprises will be required to adopt IFRS in place of Canadian GAAP for interim and annual reporting purposes for fiscal years beginning on or after January 1, 2011, unless, as permitted by Canadian securities regulations, registrants were to adopt U.S. GAAP on or before this date. CP has determined that, commencing on January 1, 2010, it will adopt U.S. GAAP for its financial reporting, which will be consistent with the reporting of other North American Class I railways. As a result, CP will not be adopting IFRS in 2011.

BUSINESS COMBINATIONS, CONSOLIDATED FINANCIAL STATEMENTS AND NON-CONTROLLING INTERESTS

In January 2009, the CICA issued three new standards:

Business combinations, Section 1582

This section which replaces the former Section 1581 "Business combinations" and provides the Canadian equivalent to IFRS 3 "Business Combinations" (January 2008). The new standard requires the acquiring entity in a business combination to recognize most of the assets acquired and liabilities assumed in the transaction at fair value including contingent assets and liabilities; and recognize and measure the goodwill acquired in the business combination or a gain from a bargain purchase. Acquisition-related costs are also to be expensed.

Consolidated financial statements, Section 1601 and Non-controlling interests, Section 1602

These two sections replace Section 1600 "Consolidated financial statements". Section 1601 "Consolidated financial statements" carries forward guidance from Section 1600 "Consolidated financial statements" with the exception of non-controlling interests which are addressed in a separate section. Section 1602 "Non-controlling interests", requires the Company to report non-controlling interests within equity, separately from the equity of the owners of the parent, and transactions between an entity and non-controlling interests as equity transactions.

All three standards are effective January 1, 2011. The Company will not adopt these standards given the decision to report under U.S. GAAP effective January 1, 2010.

4 Gain on sales of partnership interest and significant properties

During 2009, the Company completed a sale of a portion of its investment in the Detroit River Tunnel Partnership ("DRTP") to its existing partner, reducing the Company's ownership from 50% to 16.5%. The sale was agreed to on March 31, 2009 but was subject to regulatory approval, which was received during the second quarter. The proceeds received in the second quarter from the transaction were $110 million. Additional proceeds of $22 million are contingent on achieving certain future freight volumes through the tunnel, and have not been recognized. The gain on this transaction was $81.2 million ($68.7 million after tax). Effective April 1, 2009, the Company discontinued proportionate consolidation and is accounting for its remaining investment in the DRTP under the equity method of accounting.

During 2009, the Company also completed two significant real estate sales, including Windsor Station and land in Western Canada, resulting in gains of $79.1 million ($68.1 million after tax).

The Company sold Windsor Station in Montreal, for proceeds of $80.0 million, including the assumption of a mortgage of $16 million due in 2011. CP will continue to occupy a portion of Windsor Station through a lease for a 10-year period after the sale. As a result, part of the transaction is considered to be a sale-leaseback and consequently a gain of $19.5 million related to this part of the transaction has been deferred and is being amortized over the remainder of the lease term.

The Company sold land in Western Canada for transit purposes for proceeds of $43.0 million.

5 Loss on termination of lease with shortline railway

During 2009, the Company made a payment of approximately $73 million to terminate a contract with a lessee in order to cease through-train operations over the CP owned rail branchline between Smiths Falls, Ontario and Sudbury, Ontario including a settlement of a $20.6 million existing liability. The contract with the lessee provided for the operation of a minimum number of CP freight trains over the leased branchline. The loss on the transaction recognized in the fourth quarter was $54.5 million ($37.6 million after tax).

6 Other income and charges

(in millions of Canadian dollars)	**2009**	2008	2007
Accretion charges on accruals recorded at present value	**$ 8.7**	$ 6.4	$ 8.1
Accretion income on long-term floating rate notes (Note 19)	**(2.9)**	–	–
(Gain) loss in fair value of long-term floating rate notes/ ABCP (Note 19)	**(6.3)**	49.4	21.5
Net loss on repurchase of debt (Note 18)	**16.6**	–	–
Other exchange (gains) losses	**(0.4)**	6.1	5.8
Foreign exchange (gain) loss on long-term debt	**(5.8)**	16.3	(169.8)
Other	**9.0**	10.2	15.7
Total other income and charges	**$ 18.9**	$ 88.4	$ (118.7)

7 Net interest expense

(in millions of Canadian dollars)	2009	2008	2007
Interest cost	**$ 293.4**	$ 280.3	$ 221.1
Interest capitalized to net properties	**(14.3)**	(9.9)	(1.5)
Interest expense	**279.1**	270.4	219.6
Interest income	**(6.0)**	(9.3)	(15.3)
Net interest expense	**$ 273.1**	$ 261.1	$ 204.3
Gross cash interest payments	**$ 289.8**	$ 269.6	$ 208.9

Interest expense includes interest on capital leases of $27.3 million for the year ended December 31, 2009 (2008 – $20.9 million; 2007 – $21.6 million).

8 Income taxes

The following is a summary of the major components of the Company's income tax expense:

(in millions of Canadian dollars)	2009	2008 Restated (Note 2)	2007 Restated (Note 2)
Canada (domestic)			
Current income tax (recovery) expense	**$ (51.0)**	$ 14.0	$ 69.8
Future income tax expense			
Origination and reversal of temporary differences	**185.2**	15.2	163.2
Effect of tax rate decreases	**(57.9)**	(14.9)	(152.2)
Effect of hedge of net investment in self-sustaining foreign subsidiaries	**(31.4)**	40.2	(9.7)
Other	**(8.1)**	–	(6.9)
Total future income tax expense (recovery)	**87.8**	40.5	(5.6)
Total income taxes (domestic)	**$ 36.8**	$ 54.5	$ 64.2
Other (foreign)			
Current income tax (recovery) expense	**$ (0.7)**	$ (34.4)	$ 36.2
Future income tax expense			
Origination and reversal of temporary differences	**74.6**	129.9	64.2
Other	**(9.2)**	(14.1)	(10.3)
Total future income tax expense	**65.4**	115.8	53.9
Total income taxes (foreign)	**$ 64.7**	$ 81.4	$ 90.1
Total			
Current income tax (recovery) expense	**$ (51.7)**	$ (20.4)	$ 106.0
Future income tax expense	**153.2**	156.3	48.3
Total income taxes (domestic and foreign)	**$ 101.5**	$ 135.9	$ 154.3

The provision for future income taxes arises from temporary differences in the carrying values of assets and liabilities for financial statement and income tax purposes and the effect of loss carry forwards. The items comprising the future income tax assets and liabilities are as follows:

(in millions of Canadian dollars)	2009	2008 Restated (Note 2)
Future income tax assets		
Restructuring liability	**$ 21.4**	$ 29.1
Amount related to tax losses carried forward	**224.2**	92.3
Liabilities carrying value in excess of tax basis	**56.0**	124.2
Future environmental remediation costs	**42.6**	53.9
Other	**82.4**	88.3
Total future income tax assets	**426.6**	387.8
Future income tax liabilities		
Capital assets carrying value in excess of tax basis	**2,387.7**	2,503.4
Other long-term assets carrying value in excess of tax basis	**438.6**	299.1
Other	**21.7**	36.4
Total future income tax liabilities	**2,848.0**	2,838.9
Total net future income tax liabilities	**2,421.4**	2,451.1
Current future income tax assets	**128.1**	76.5
Long-term future income tax liabilities	**$ 2,549.5**	$ 2,527.6

The Company's consolidated effective income tax rate differs from the expected statutory tax rates. Expected income tax expense at statutory rates is reconciled to income tax expense as follows:

(in millions of Canadian dollars)	2009	2008 Restated (Note 2)	2007 Restated (Note 2)
Expected income tax expense at Canadian statutory tax rates	**$ 219.3**	$ 234.3	$ 332.5
Increase (decrease) in taxes resulting from:			
Items not subject to tax	**(25.0)**	(61.6)	(62.5)
Foreign tax rate differentials	**(6.8)**	(0.2)	33.8
Effect of tax rate decreases	**(57.9)**	(14.9)	(152.2)
Other	**(28.1)**	(21.7)	2.7
Income tax expense	**$ 101.5**	$ 135.9	$ 154.3

The Company has no unrecognized capital losses at December 31, 2009 and 2008.

In 2009, legislation was substantively enacted to reduce provincial income tax rates. As a result of these changes, the Company recorded a $57.9 million benefit in future tax liability and income tax expense, related to the revaluation of its future income tax balances as at December 31, 2008.

In 2008, legislation was substantively enacted to reduce provincial income tax rates. As a result of these changes, the Company recorded a $14.9 million benefit in future tax liability and income tax expense, related to the revaluation of its future income tax balances as at December 31, 2007.

In 2007, legislation was enacted to reduce Canadian federal corporate income tax rates over a period of several years. As a result of these changes, the Company recorded a $152.2 million benefit in future tax liability and income tax expense, related to the revaluation of its future income tax balances as at December 31, 2006.

Cash taxes recovered, net of payments in the year ended December 31, 2009, were $38.9 million (2008 net cash taxes paid $59.0 million; 2007 net cash taxes paid $6.7 million). Cash taxes paid in the year ended December 31, 2009, were $11.4 million (2008 – $70.0 million; 2007 – $18.8 million).

9 Earnings per share

At December 31, 2009, the number of shares outstanding was 168.5 million (2008 – 153.8 million).

Basic earnings per share have been calculated using net income for the year divided by the weighted average number of CPRL shares outstanding during the year.

Diluted earnings per share have been calculated using the treasury stock method, which assumes that any proceeds received from the exercise of in-the-money options would be used to purchase Common Shares at the average market price for the period. For purposes of this calculation, at December 31, 2009, there were 1.6 million dilutive options outstanding (2008 – 1.5 million; 2007 – 4.5 million). These option totals at December 31, 2009 exclude 1.3 million options (2008 – 1.0 million; 2007 – 2.4 million) for which there are TSARs outstanding *(Note 26)*, as these are not included in the dilution calculation.

The number of shares used in the earnings per share calculations is reconciled as follows:

(in millions)	**2009**	2008 Restated (Note 2)	2007 Restated (Note 2)
Weighted average shares outstanding	**166.3**	153.7	154.0
Dilutive effect of weighted average number of stock options	**0.5**	1.8	1.6
Weighted average diluted shares outstanding	**166.8**	155.5	155.6
(in dollars)			
Basic earnings per share	**$ 3.68**	$ 3.95	$ 6.05
Diluted earnings per share	**$ 3.67**	$ 3.91	$ 5.99

In 2009, the weighted-average number of options excluded from the computation of diluted earnings per share because their effect was not dilutive was 2,818,398 (2008 – 1,344,669; 2007 – 3,183).

10 Other comprehensive (loss) income and accumulated other comprehensive income

The components of "Accumulated other comprehensive income" are as follows:

(in millions of Canadian dollars)	**2009**	2008 Restated (Note 2)
Unrealized foreign exchange (loss) gain on translation of the net investment in U.S. subsidiaries	**$ (186.2)**	$ 60.0
Unrealized foreign exchange gain on translation of the U.S. dollar-denominated long-term debt designated as a hedge of the net investment in U.S. subsidiaries	**252.3**	39.3
Deferred loss on settled hedge instruments	**(18.3)**	(20.6)
Unrealized effective gains (losses) on cash flow hedges	**1.7**	(1.0)
Accumulated other comprehensive income	**$ 49.5**	$ 77.7

Components of "Other comprehensive income (loss)" and the related tax effects are as follows:

(in millions of Canadian dollars)	**2009**	2008 Restated (Note 2)	2007 Restated (Note 2)
Accumulated other comprehensive income – January 1	**$ 77.7**	$ 41.4	$ 80.8
Other comprehensive (loss) income:			
Unrealized foreign exchange (loss) gain on:			
Translation of the net investment in U.S. subsidiaries	**(246.4)**	305.1	(77.0)
Translation of the U.S. dollar-denominated long-term debt designated as a hedge of the net investment in U.S. subsidiaries (net of tax of $(31.4) million, $40.2 million, and $(9.7) million, respectively)	**213.1**	(257.3)	61.3
Change in derivatives designated as cash flow hedges:			
Realized loss (gain) on cash flow hedges recognized in income (net of tax of $(1.4) million, $3.2 million, and $4.0 million, respectively)	**3.4**	(7.8)	(6.6)
Unrealized gain (loss) on cash flow hedges (net of tax of $(0.8) million, $1.4 million, and $9.1 million, respectively)	**1.7**	(3.7)	(17.1)
Other comprehensive (loss) income	**(28.2)**	36.3	(39.4)
Accumulated other comprehensive income – December 31	**$ 49.5**	$ 77.7	$ 41.4

During the next twelve months, the Company expects $2.5 million ($1.7 million after tax) of unrealized holding gains on derivative instruments to be realized and recognized in the Consolidated Statement of Income. Derivative instruments designated as cash flow hedges will mature during the period ending December 2010.

11 Cash and cash equivalents

(in millions of Canadian dollars)	**2009**	2008
Cash	**$ 35.8**	$ 11.3
Short-term investments:		
Government guaranteed investments	**628.6**	–
Deposits with financial institutions	**14.7**	106.3
Total cash and cash equivalents	**$ 679.1**	$ 117.6

12 Accounts receivable

(in millions of Canadian dollars)	**2009**	2008
Freight	**$ 316.8**	$ 464.1
Non-freight	**155.2**	215.1
	472.0	679.2
Allowance for doubtful accounts	**(31.0)**	(31.8)
	$ 441.0	$ 647.4

The Company maintains an allowance for doubtful accounts based on expected collectibility of accounts receivable. Credit losses are based on specific identification of uncollectible accounts, the application of historical percentages by aging category and an assessment of the current economic environment. At December 31, 2009, allowances of $31.0 million (2008 – $31.8 million) were recorded in "Accounts receivable". During 2009, $4.6 million related to doubtful accounts (2008 – $14.4 million) was expensed within "Purchased services and other".

During 2008, the Company's accounts receivable securitization program was terminated and settled. As a result, the Company's "Accounts receivable" increased by $120.0 million and in the Consolidated Statement of Cash Flows the "Change in non-cash working capital balances related to operations" reflects an outflow of $120.0 million.

13 Investments

(in millions of Canadian dollars)	**2009**	2008
Rail investments accounted for on an equity basis	**$ 56.1**	$ 48.4
Long-term floating rate notes / ABCP (Note 19)	**69.3**	72.7
Other investments	**31.3**	30.0
Total investments	**$ 156.7**	$ 151.1

During 2009, the Company completed a sale of a portion of its investment in the DRTP to its existing partner, reducing the Company's ownership from 50% to 16.5% *(Note 4)*. Effective April 1, 2009, the Company discontinued proportionate consolidation and is accounting for its remaining investment in the DRTP under the equity method of accounting.

In the prior year the Company accounted for its 50% investment in DRTP on a proportionate consolidation basis. Summarized financial information for the Company's interest in the DRTP is as follows:

(in millions of Canadian dollars)	2008 Restated (Note 2)
Total assets	$ 40.8
Total liabilities	2.9
Revenues	10.3

14 Net properties

		2009			2008		
						Restated (note 2)	
(in millions of Canadian dollars)	Annual rate	**Cost**	**Accumulated depreciation**	**Net book value**	Cost	Accumulated depreciation	Net book value
Track and roadway	2.9%	**$ 11,590.1**	**$ 3,197.5**	**$ 8,392.6**	$ 11,862.4	$ 3,195.0	$ 8,667.4
Buildings	2.8%	**357.3**	**115.4**	**241.9**	366.5	126.8	239.7
Rolling stock	2.9%	**3,369.7**	**1,327.1**	**2,042.6**	3,497.4	1,340.2	2,157.2
Information systems[1]	8.2%	**639.7**	**276.2**	**363.5**	609.9	240.0	369.9
Other	4.7%	**1,339.7**	**412.5**	**927.2**	1,418.0	467.6	950.4
Total net properties		**$ 17,296.5**	**$ 5,328.7**	**$ 11,967.8**	$ 17,754.2	$ 5,369.6	$ 12,384.6

[1] Additions during 2009 were $42.9 million (2008 – $55.6 million; 2007 – $48.8 million) and depreciation expense was $47.5 million (2008 – $44.5 million; 2007 – $50.5 million).

CAPITAL LEASES INCLUDED IN PROPERTIES

(in millions of Canadian dollars)	2009 Cost	2009 Accumulated depreciation	2009 Net book value	2008 Cost	2008 Accumulated depreciation	2008 Net book value
Buildings	$ 0.5	$ 0.1	$ 0.4	$ –	$ –	$ –
Rolling stock	536.2	139.3	396.9	604.3	152.6	451.7
Other	4.5	1.8	2.7	5.6	1.3	4.3
Total assets held under capital lease	$ 541.2	$ 141.2	$ 400.0	$ 609.9	$ 153.9	$ 456.0

During 2009, properties were acquired under the Company's capital program at an aggregate cost of $722.2 million (2008 – $922.3 million; 2007 – $850.9 million), $0.8 million of which were acquired by means of capital leases (2008 – $79.5 million; 2007 – $12.1 million). Cash payments related to capital purchases were $722.4 million in 2009 (2008 – $832.9 million; 2007 – $836.0 million). At December 31, 2009, $11.0 million (2008 – $9.4 million; 2007 – $2.1 million) remained in accounts payable related to the above purchases.

15 Equity income

DAKOTA, MINNESOTA & EASTERN RAILROAD CORPORATION ("DM&E")

DM&E was acquired on October 4, 2007 and is wholly owned by the Company. The purchase was subject to review and approval by the U.S. Surface Transportation Board ("STB"), during which time the shares of DM&E were placed in a voting trust. The STB approved the purchase effective on October 30, 2008, at which time the Company assumed control of the DM&E.

The Company accounted for its investment in DM&E using the equity method until the acquisition was approved by the STB and the Company assumed control. Equity income in DM&E for the period of October 4, 2007 to December 31, 2007 of $11.2 million and equity income in 2008 earned prior to STB approval effective October 30, 2008 of $50.9 million, are recorded in "Equity income in Dakota, Minnesota & Eastern Railroad Corporation" on the Consolidated Statement of Income. Subsequent to October 30, 2008 the results of DM&E are consolidated on a line-by-line basis.

DM&E was purchased for $1.5 billion resulting in goodwill of US$147 million *(Note 17)* as at October 4, 2007. Future contingent payments of up to approximately US$1.1 billion consisting of US$390 million which would become due if construction of the Powder River Basin expansion project starts prior to December 31, 2025 and up to approximately US$740 million would become due upon the movement of specified volumes over the Powder River Basin extension prior to December 31, 2025. Certain interest and inflationary adjustments would also become payable up to December 31, 2025 upon achievement of certain milestones. The contingent payments would be accounted for as an increase in the purchase price. Certain intangible assets acquired are subject to amortization. Neither the amortization of intangible assets nor goodwill are deductible for tax purposes.

OTHER EQUITY INVESTMENTS

CP's investment in the DRTP generated income before tax of $3.4 million in 2009 (2008 – $8.6 million; 2007 – $9.7 million). The equity loss from the Company's investment in the CNCP Niagara-Windsor Partnership was $0.5 million in 2009 (2008 – loss of $0.6 million; 2007 – income of $0.2 million). CP's investment in the Indiana Harbor Belt Railroad Company generated equity income of $2.2 million in 2009 (2008 – $5.6 million; 2007 – $4.1 million).

16 Prepaid pension costs and other assets

(in millions of Canadian dollars)	**2009**	2008 Restated (Note 2)
Prepaid pension costs (Note 25)	**$ 1,644.4**	$ 1,056.0
Other	**132.8**	165.8
Total prepaid pension costs and other assets	**$ 1,777.2**	$ 1,221.8

Other includes various long-term assets such as loans receivable, contributions to customers, and certain material and supplies.

17 Goodwill and intangible assets

(in millions of Canadian dollars)	**Goodwill**	Intangible assets
Balance at December 31, 2007	$ –	$ –
Additions (Note 15)	147.1	50.0
Amortization	–	(2.0)
Foreign exchange impact	32.5	9.6
Balance at December 31, 2008	$ 179.6	$ 57.6
Amortization	–	(2.5)
Foreign exchange impact	(24.7)	(7.7)
Balance at December 31, 2009	$ 154.9	$ 47.4

Intangible assets includes an option to expand the track network, favourable leases, customer relationships and interline contracts acquired in a business acquisition.

As part of the acquisition of DM&E in 2007, CP recognized goodwill of US$147 million on the allocation of the purchase price, determined as the excess of the purchase price over the fair value of the net assets acquired. Since the acquisition the operations of DM&E have been integrated with CP's U.S. operations, the related goodwill is now allocated to CP's U.S. reporting unit. Goodwill is tested for impairment at least once per year as at October 1st. The goodwill impairment test determines if the fair value of the reporting unit continues to exceed its net book value, or whether an impairment is required. The fair value of the reporting unit is affected by projections of its profitability including estimates of revenue growth, which are inherently uncertain. Given the downturn in the world economy, CP monitored the fair value of the related reporting unit for potential impairment during the year. The annual test for impairment determined that the fair value of CP's U.S. reporting unit exceeded the carrying value by approximately 10%. Decreases to the profit projections, which could be caused by a prolonged economic recession, or increases to the discount rate used in the valuation could require an impairment in future periods. The carrying value of CP's goodwill changes from period to period due to changes in the exchange rate. As at December 31, 2009 goodwill was $154.9 million (2008 – $179.6 million).

Intangible assets of $47.4 million includes the amortized costs of an option to expand the track network, favourable leases, customer relationships and interline contracts. Intangible assets with determinable lives are amortized on a straight-line basis over their estimated useful lives. Intangible assets with indefinite lives are not amortized but are assessed for impairment on an annual basis, or more often if the events or circumstances warrant. If the carrying value of the indefinite-lived intangible asset exceeds its fair value, an impairment charge is recognized immediately. Annual amortization over the period 2010 to 2014 are expected to be approximately $2 million per year.

18 Long-term debt

(in millions of Canadian dollars)	Maturity	Currency in which payable	2009	2008
4.90% 7-year Medium Term Notes (A)	June 2010	CDN$	$ 350.0	$ 349.9
6.250% 10-year Notes (A)	Oct. 2011	US$	264.2	505.7
5.75% 5-year Notes (A)	May 2013	US$	105.8	483.3
6.50% 10-year Notes (A)	May 2018	US$	286.6	362.0
6.25% 10-year Medium Term Notes (A)	June 2018	CDN$	371.1	370.7
7.250% 10-year Notes (A)	May 2019	US$	363.2	–
9.450% 30-year Debentures (A)	Aug. 2021	US$	258.8	301.2
7.125% 30-year Debentures (A)	Oct. 2031	US$	362.0	420.8
5.750% 30-year Debentures (A)	Mar. 2033	US$	250.6	292.4
5.95% 30-year Notes (A)	May 2037	US$	459.4	534.3
6.45% 30-year Notes (A)	Nov. 2039	CDN$	397.8	–
Secured Equipment Loan (B)	Aug. 2015	CDN$	136.1	139.3
5.41% Senior Secured Notes (C)	Mar. 2024	US$	131.1	156.7
6.91% Secured Equipment Notes (D)	Oct. 2024	CDN$	198.4	205.9
5.57% Senior Secured Notes (E)	Dec. 2024	US$	66.9	–
7.49% Equipment Trust Certificates (F)	Jan. 2021	US$	111.7	133.3
Bank loan payable on demand (5.883%) (G)	June 2010	CDN$	5.7	5.4
Other Long Term Loans (4.00% – 5.65%)	2010-2015	US$	5.3	5.4
Obligations under capital leases (5.20% – 9.38%) (H)	2010-2026	US$	319.7	406.4
Obligations under capital leases (5.64% – 5.65%) (H)	2013-2031	CDN$	12.0	12.8
			4,456.4	4,685.5
Perpetual 4% Consolidated Debenture Stock (I)		US$	32.0	37.2
Perpetual 4% Consolidated Debenture Stock (I)		GB£	6.4	7.1
			4,494.8	4,729.8
Less: Long-term debt maturing within one year			392.1	44.0
			$ 4,102.7	$ 4,685.8

At December 31, 2009, the gross amount of long-term debt denominated in U.S. dollars was US$2,911.2 million (2008 – US$3,009.8 million).

Annual maturities and principal repayments requirements, excluding those pertaining to capital leases, for each of the five years following 2009 are (in millions): 2010 – $381.6; 2011 – $289.2; 2012 – $38.1; 2013 – $148.3; 2014 – $44.2.

A. These debentures and notes pay interest semi-annually and are unsecured, but carry a negative pledge.

During May 2009, the Company issued US$350 million 7.25% 10-year Notes for net proceeds of CDN$408.2 million. The proceeds from this offering contributed to the repurchase of debt with a carrying amount of $555.3 million pursuant to a tender offer for a total cost of $571.9 million. Upon repurchase of the debt a net loss of $16.6 million was recognized to "Other income and charges". The loss consisted largely of premiums paid to bond holders to tender their debt, and the write-off of unamortized fees, partly offset by a fair value adjustment

(gain) recognized on the unwind of interest rate swaps associated with the 6.250% Notes that were repurchased *(Note 19)*. The following table summarizes the principal amount, carrying amount and cost to redeem repurchased debt:

(in millions)	Maturity	Principal amount in USD	Carrying amount in CDN	Cost to redeem in CDN
6.250% Notes	2011	$ 154.3	$ 184.1	$ 184.6
5.75% Notes	2013	298.6	342.7	359.1
6.50% Notes	2018	24.8*	28.5	28.2
Total debt tendered		$ 477.7	$ 555.3	$ 571.9

* Includes US$2.7 million principal amount of debt repurchased prior to commencement of the debt tender.

During November 2009, the Company issued $400 million 6.45% 30-year Notes. Net proceeds from this offering were $397.8 million. The proceeds from this offering were used for general corporate purposes.

During 2008, the Company issued US$400 million 5.75% 5-year Notes, US$300 million 6.50% 10-year Notes and CDN$375 million 6.25% 10-year Medium Term Notes. Net proceeds from these offerings were CDN$1,068.7 million. The proceeds from these offerings were used to partially repay the temporary bridge financing used to acquire the DM&E.

B. The Secured Equipment Loan is collateralized by specific locomotive units with a carrying value of $130.7 million at December 31, 2009. The floating interest rate is calculated based on a six-month average Canadian Dollar Offered Rate (calculated based on an average of Bankers' Acceptance rates) plus 53 basis points (2009 – 1.82%; 2008 – 4.28%). The Company makes blended payments of principal and interest semi-annually. Final repayment of the remaining principal balance of $53.2 million is due in August 2015.

C. The 5.41% Senior Secured Notes are collateralized by specific locomotive units with a carrying value of $172.9 million at December 31, 2009. The Company pays equal blended semi-annual payments of principal and interest. Final repayment of the remaining principal of US $49.4 million is due in March 2024.

D. The 6.91% Secured Equipment Notes are full recourse obligations of the Company collateralized by a first charge on specific locomotive units with a carrying value of $171.5 million at December 31, 2009. The Company pays equal blended semi-annual payments of principal and interest up to and including October 2024.

E. During December 2009, the Company issued US$64.7 million of 5.57% Senior Secured Notes for net proceeds of CDN$66.7 million. The Notes are secured by specific locomotive units and other rolling stock with a combined carrying value of $76.4 million at December 31, 2009. The Company pays equal blended semi-annual payments of principal and interest up to and including December 2024. Final repayment of the remaining principal of US$33.0 million is due in December 2024.

F. The 7.49% Equipment Trust Certificates are collateralized by specific locomotive units with a carrying value of $119.7 million at December 31, 2009. The Company makes semi-annual payments that vary in amount and are interest-only payments or blended principal and interest payments. Final repayment of the remaining principal of US$10.9 million is due in January 2021.

G. The bank loan payable on demand matures June 2010 and carries an interest rate of 5.883%. The amount of the loan was $219.8 million at December 31, 2009 (2008 – $207.2 million). The Company has offset against this loan a financial asset of $214.1 million (2008 – $201.8 million) with the same financial institution.

H. At December 31, 2009, capital lease obligations included in long-term debt were as follows:

(in millions of Canadian dollars)	Year	Capital leases
Minimum lease payments in:		
	2010	$ 33.4
	2011	33.4
	2012	33.8
	2013	31.9
	2014	177.1
	Thereafter	213.1
Total minimum lease payments		522.7
Less: Imputed interest		(191.0)
Present value of minimum lease payments		331.7
Less: Current portion		(10.5)
Long-term portion of capital lease obligations		$ 321.2

The carrying value of the assets collateralizing the capital lease obligations was $400.0 million at December 31, 2009.

I. The Consolidated Debenture Stock, authorized by an Act of Parliament of 1889, constitutes a first charge upon and over the whole of the undertaking, railways, works, rolling stock, plant, property and effects of the Company, with certain exceptions.

19 Financial instruments

The Company uses the following methods and assumptions to estimate initial and subsequent fair values of each class of financial instrument for recognition and/or disclosure as follows:

Loans and receivables

Accounts receivable – The carrying amounts approximate fair value because of the short maturity of these instruments.

Investments – The fair value of long-term receivables is determined using discounted cash flow analysis and observable market based inputs.

Financial liabilities

Accounts payable and accrued liabilities, short-term borrowings and dividends payable – The carrying amounts approximate fair value because of the short maturity of these instruments.

Other long-term liabilities – The fair value of contractual amounts payable over a period greater than one year are valued at an amount equal to the discounted future cash flow using a discount rate that reflects market prices to settle liabilities with similar terms and maturities.

Long-term debt – The fair value of publicly traded long-term debt is determined based on market prices. The fair value of other long-term debt is estimated based on rates currently available to the Company for long-term borrowings with terms and conditions similar to those borrowings in place at the applicable Consolidated Balance Sheet date.

Available for sale

Investments – Certain equity investments, which do not represent control or significant influence and which are accounted for on a cost basis, have a carrying value that equals cost as fair value cannot be reliably established. There are no quoted prices in an active market for these investments.

Held for trading

Derivative instruments are classified as held for trading and measured at fair value determined by using quoted market prices for similar instruments. Changes in fair values of such derivatives are recognized in net income as they arise.

Cash and cash equivalents – The carrying amount is equal to fair value because of the short maturity of these instruments.

Investments – Long-term floating rate notes / ABCP are carried at fair value, which has been determined using valuation techniques that incorporate probability weighted discounted future cash flows reflecting market conditions and other factors that a market participant would consider.

Fair value of financial instruments

The Company categorizes its financial assets and liabilities measured at fair value into one of three different levels depending on the observability of the inputs employed in the measurement.

- Level 1: This category includes assets and liabilities measured at fair value based on unadjusted quoted prices for identical assets and liabilities in active markets that are accessible at the measurement date. An active market for an asset or liability is considered to be a market where transactions occur with sufficient frequency and volume to provide pricing information on an ongoing basis.
- Level 2: This category includes valuations determined using directly or indirectly observable inputs other than quoted prices included within Level 1. Derivative instruments in this category are valued using models or other industry standard valuation techniques derived from observable market data. Such valuation techniques include inputs such as quoted forward prices, time value, volatility factors and broker quotes that can be observed or corroborated in the market. Instruments valued using inputs in this category include non exchange traded derivatives such as over the counter financial forward contracts, as well as swaps for which observable inputs can be obtained for the entire duration of the derivative instrument.
- Level 3: This category includes valuations based on inputs which are less observable, unavailable or where the observable data does not support a significant portion of the instruments' fair value. Generally, Level 3 valuations are longer dated transactions, occur in less active markets, occur at locations where pricing information is not available, or have no binding broker quote to support Level 2 classifications.

When possible, the estimated fair value is based on quoted market prices, and, if not available, estimates from third party brokers. For non exchange traded derivatives classified in Levels 2 and 3, the Company uses standard valuation techniques to calculate fair value. These methods include discounted mark to market for forwards, futures and swaps. Primary inputs to these techniques include observable market prices (interest, foreign exchange and commodity) and volatility, depending on the type of derivative and nature of the underlying risk. The Company uses inputs and data used by willing market participants when valuing derivatives and considers its own credit default swap spread as well as those of its counterparties in its determination of fair value. Wherever possible the Company uses observable inputs. A detailed analysis of the techniques used to value the Company's long-term floating rate notes is discussed further below.

The following table presents the Company's fair value hierarchy for those assets and liabilities measured at fair value on a recurring basis, all of which are held for trading, as at December 31, 2009.

(in millions of Canadian dollars)	Level 1	Level 2	Level 3	Total
Financial assets				
Current derivative assets	$ –	$ 2.5	$ –	$ 2.5
Long-term derivative assets	–	0.2	–	0.2
Investments	–	–	69.3	69.3
Financial liabilities				
Current derivative liabilities	–	18.2	–	18.2

LONG-TERM FLOATING RATE NOTES/ABCP

At December 31, 2009, the Company held replacement long-term floating rate notes, with a total settlement value of $129.1 million and a carrying value of $69.3 million. At December 31, 2008, the Company held the original ABCP issued by a number of trusts with an original cost of $143.6 million and a carrying value of $72.7 million.

On January 12, 2009, a Canadian Court granted an order for the implementation of a restructuring plan for the ABCP and the restructuring was completed on January 21, 2009. As a result, CP received new replacement long-term floating rate notes with a total settlement value of $142.8 million.

During 2009, the Company received $0.2 million in partial redemption of its Master Asset Vehicle ("MAV") 2 Class A-1 notes and MAV 2 Class 7 Ineligible Assets ("IA") Tracking notes. These redemptions were close to the original investment value of the redeemed notes. As well, the Company received $12.3 million in partial redemption of its MAV 3 Class 9 Traditional Asset ("TA") Tracking notes and MAV 2 Class 8 IA Tracking notes representing 100% of the original investment value of the redeemed notes. Additionally, $1.2 million of MAV 2 Class 14 notes

were fully redeemed with no proceeds being received by CP. As a result of the restructuring and the subsequent redemptions of notes, at December 31, 2009 the Company held replacement long-term floating rate notes with settlement values, as follows:

- $116.8 million MAV 2 notes with eligible assets represented by a combination of leveraged collateralized debt, synthetic assets and traditional securitized assets with expected repayments over approximately five to seven years:
  - Class A-1: $59.1 million
  - Class A-2: $45.9 million
  - Class B: $8.3 million
  - Class C: $3.5 million
- $12.1 million MAV 2 IA Tracking notes representing assets that have an exposure to US mortgages and sub-prime mortgages with expected repayments over approximately three and a half to 19 years:
  - Class 3: $0.5 million
  - Class 6: $5.5 million
  - Class 7: $3.4 million
  - Class 8: $0.1 million
  - Class 13: $2.6 million
- $0.2 million MAV 3 Class 9 TA Tracking notes with expected repayments over approximately seven years.

The MAV 2 Class A-1 notes have received an A rating by DBRS. However, on August 11, 2009, the rating for the MAV 2 Class A-2 notes was downgraded from A to BBB (low) under a negative watch by DBRS.

The valuation technique used by the Company to estimate the fair value of its investment in long-term floating rate notes at December 31, 2009 and ABCP at December 31, 2008, incorporates probability weighted discounted cash flows considering the best available public information regarding market conditions and other factors that a market participant would consider for such investments. This valuation technique is categorized as Level 3 within the fair value hierarchy. The above noted redemption of notes and other minor changes in assumptions have resulted in a gain of $6.3 million (2008 – loss of $49.4 million, 2007 – loss of $21.5 million). The interest rates and maturities of the various long-term floating rate notes and ABCP, discount rates and credit losses modelled at December 31, 2009 and 2008 are:

	2009	2008
Probability weighted average coupon interest rate	Nil%	2.2%
Weighted average discount rate	7.9%	9.1%
Expected repayments of long-term floating rate notes	Three and a half to 19 years	Five to eight years, other than certain tracking notes to be paid down on restructuring
Credit losses	MAV 2 eligible asset notes: nil to 100% MAV 2 IA Tracking notes: 25% MAV 3 Class 9 TA Tracking notes: nil%	Notes expected to be rated[1]: nil to 25% Notes not expected to be rated[2]: 25 to 100%

[1] TA Tracking, Class A-1 and Class A-2 senior notes and IA Tracking notes.
[2] Class B and Class C subordinated notes and IA Tracking notes.

The probability weighted discounted cash flows resulted in an estimated fair value of the Company's long-term floating rate notes of $69.3 million at December 31, 2009 (2008 — ABCP $72.7 million). The change in the original cost and estimated fair value of the Company's long-term floating rate notes is as follows (representing a roll-forward of assets measured at fair value using Level 3 inputs):

(in millions of Canadian dollars)	Original cost	Estimated fair value
As at January 1, 2008	$ 143.6	$ 122.1
Change in market assumptions	–	(49.4)
As at December 31, 2008	143.6	72.7
Change due to restructuring, January 21, 2009	(0.8)	–
Redemption of notes	(13.7)	(8.0)
Accretion	–	2.9
Change in market assumptions	–	1.7
As at December 31, 2009	$ 129.1	$ 69.3

Accretion and gains and losses resulting from the redemption of notes and changes in market assumptions are reported in "Other income and charges".

Sensitivity analysis is presented below for key assumptions at December 31, 2009:

(in millions of Canadian dollars)	Change in fair value of long-term floating rate notes
Coupon interest rate	
50 basis point increase	$ 2.3
50 basis point decrease	Nil[1]
Discount rate	
50 basis point increase	$(2.1)
50 basis point decrease	$ 2.2

[1] Notes are currently not expected to receive any coupon interest.

Continuing uncertainties regarding the value of the assets which underlie the long-term floating rate notes and the amount and timing of cash flows could give rise to a further material change in the value of the Company's investment in long-term floating rate notes which could impact the Company's near-term earnings.

Carrying value and fair value of financial instruments

The table below reconciles carrying value positions of the Company's financial instruments with Consolidated Balance Sheet categories:

(in millions of Canadian dollars)	2009 Carrying Value of Financial Assets / Liabilities	2009 Carrying Value of Other Assets / Liabilities	2009 Balance Sheet Amount	2008 Restated (Note 2) Carrying Value of Financial Assets / Liabilities	2008 Restated (Note 2) Carrying Value of Other Assets / Liabilities	2008 Restated (Note 2) Balance Sheet Amount
Assets						
Cash and cash equivalents	**$ 679.1**	**$ –**	**$ 679.1**	$ 117.6	$ –	$ 117.6
Accounts receivable						
Trade accounts receivable	**419.6**	**–**		638.7	–	
Other	**–**	**21.4**		–	8.7	
	419.6	**21.4**	**441.0**	638.7	8.7	647.4
Other						
Derivatives	**2.5**	**–**		10.4	–	
Other	**–**	**44.0**		–	55.3	
	2.5	**44.0**	**46.5**	10.4	55.3	65.7
Investments						
Equity investments at cost	**15.8**	**–**		18.3	–	
Long-term receivables at amortized cost	**15.8**	**–**		10.8	–	
Long-term floating rate notes / ABCP	**69.3**	**–**		72.7	–	
Other	**–**	**55.8**		–	49.3	
	100.9	**55.8**	**156.7**	101.8	49.3	151.1
Prepaid pension costs and other assets						
Derivatives	**0.2**	**–**		71.0	–	
Other	**–**	**1,777.0**		–	1,150.8	
	0.2	**1,777.0**	**1,777.2**	71.0	1,150.8	1,221.8
Liabilities						
Short-term borrowings	**$ –**	**$ –**	**$ –**	$ 150.1	$ –	$ 150.1
Accounts payable and accrued liabilities						
Accounts payable and accrued liabilities	**750.5**	**–**		899.0	–	
Derivatives	**18.2**	**–**		4.6	–	
Other	**–**	**148.6**		–	131.3	
	768.7	**148.6**	**917.3**	903.6	131.3	1,034.9
Dividends payable	**41.7**	**–**	**41.7**	38.1	–	38.1
Long-term debt maturing within one year	**392.1**	**–**	**392.1**	44.0	–	44.0
Other long-term liabilities						
Derivatives	**–**	**–**		67.9	–	
Other long-term liabilities	**101.2**	**–**		90.8	–	
Other	**–**	**689.0**		–	706.5	
	101.2	**689.0**	**790.2**	158.7	706.5	865.2
Long-term debt	**4,102.7**	**–**	**4,102.7**	4,685.8	–	4,685.8

The carrying values of financial instruments equal or approximate their fair values with the exception of long-term debt which has a carrying value of $4,494.8 million at December 31, 2009 (December 31, 2008 – $4,729.8 million) and a fair value of approximately $4,824.9 million at December 31, 2009 (December 31, 2008 – $4,198.9 million). The fair value of publicly traded long-term debt is determined based on market prices at December 31, 2009 and December 31, 2008, respectively.

Financial risk management

In the normal course of operations, the Company is exposed to various market risks such as foreign exchange risk, interest rate risk, commodity price risk, other price risk, as well as credit risk and liquidity risk. To manage these risks, the Company utilizes a Financial Risk Management ("FRM") framework. The FRM goals and strategy are outlined below:

FRM objectives:

- Maintaining sound financial condition as an ongoing entity;
- Optimizing earnings per share and cash flow;
- Financing operations of the group of CP companies at the optimal cost of capital; and
- Ensuring liquidity to all Canadian and U.S. operations.

In order to satisfy the objectives above, the Company has adopted the following strategies:

- Prepare multi-year planning and budget documents at prevailing market rates to ensure clear, corporate alignment to performance management and achievement of targets;
- Measure the extent of operating risk within the business;
- Identify the magnitude of the impact of market risk factors on the overall risk of the business and take advantage of natural risk reductions that arise from these relationships; and
- Utilize financial instruments, including derivatives, to manage the remaining residual risk to levels that fall within the risk tolerance of the Company.

The Board of Directors has delegated FRM oversight to the Audit, Finance and Financial Risk Management Committee ("Audit Committee"). The Audit Committee reviews with management FRM policies and processes to be implemented across the Company, as well as the effectiveness and efficiency of such policies and processes.

The policy objective with respect to the utilization of derivative financial instruments is to selectively mitigate the impact of fluctuations in foreign exchange ("FX") rates, interest rates, fuel price, and share price. The use of any derivative instruments is carried out in accordance with approved trading limits and authorized counterparties as specified in the policy and/or mandate. It is not the Company's intent to use financial derivatives or commodity instruments for trading or speculative purposes.

Risk factors

The following is a discussion of market, credit and liquidity risks and related mitigation strategies that have been identified through the FRM framework. This is not an exhaustive list of all risks, nor will the mitigation strategies eliminate all risks listed. Risks related to the Company's investment in long-term floating rate notes are discussed in more detail above.

Foreign exchange risk

This risk refers to the fluctuation of financial commitments, assets, liabilities, income or cash flows due to changes in FX rates. The Company conducts business transactions and owns assets in both Canada and the United States; as a result, revenues and expenses are incurred in both Canadian dollars and U.S. dollars. The Company's income is exposed to FX risk largely in the following ways:

- Translation of U.S. dollar-denominated revenues and expenses into Canadian dollars – When the Canadian dollar changes relative to the U.S. dollar, income reported in Canadian dollars will change. The impact of a strengthening Canadian dollar on U.S. dollar revenues and expenses will reduce net income because the Company has more U.S. dollar revenues than expenses. This impact is excluded from the sensitivity in the table below; and
- Translation of U.S. dollar-denominated debt and other financial instruments – A strengthening Canadian dollar will reduce the Company's U.S. dollar denominated debt in Canadian dollar terms and generate a FX gain on long-term debt, which is recorded in income. Other U.S. dollar denominated financial instruments will also be impacted by changes in FX rates.

FOREIGN EXCHANGE MANAGEMENT

In terms of net income, excluding FX on long-term debt, mitigation of U.S. dollar FX exposure is provided primarily through offsets created by revenues and expenses incurred in the same currency. Where appropriate, the Company negotiates with U.S. customers and suppliers to reduce the net exposure.

The FX gains and losses on long-term debt are mainly unrealized and can only be realized when U.S. dollar denominated long-term debt matures or is settled. The Company also has long-term FX exposure on its investment in U.S. affiliates. A portion of the Company's U.S. dollar denominated long-term debt has been designated as a hedge of the net investment in self-sustaining foreign subsidiaries. This designation has

the effect of mitigating volatility on net income by offsetting long-term FX gains and losses on long-term debt. In addition, the Company may enter into FX forward contracts to hedge debt that is denominated in U.S. dollars.

Occasionally the Company will enter into short-term FX forward contracts as part of its cash management strategy.

The table below depicts the annual impact to net income and other comprehensive income ("OCI") of long-term debt, including FX forward contracts on long-term debt, had the exchange rate increased or decreased by one cent. The impact on other U.S. dollar denominated financial instruments is not considered to be material.

	Year ended December 31, 2009		Year ended December 31, 2008	
(in millions of Canadian dollars)	**Impact to Net income**	**Impact to Other comprehensive income**	Impact to Net income	Impact to Other comprehensive income
1 cent strengthening in Canadian dollar	**$(1.9)**	**$(2.0)**	$(2.3)	$(2.1)
1 cent weakening in Canadian dollar	**1.9**	**2.0**	2.3	2.1

Note: All variables excluding FX are held constant. With a 1 cent strengthening in the Canadian dollar, net income would be increased by $12.7 million (2008 – $12.0 million) and OCI would be decreased by $12.7 million (2008 – $12.0 million) if the net investment hedge was not included in the above table. With a 1 cent weakening in the Canadian dollar, the opposite would occur.

FOREIGN EXCHANGE FORWARD CONTRACTS

In 2007, the Company entered into a FX forward contract to fix the exchange rate on US$400 million 6.250% Notes due 2011. This derivative guaranteed the amount of Canadian dollars that the Company will repay when its US$400 million 6.250% Notes mature in October 2011. During 2009, CP unwound and settled US$330 million of the US$400 million currency forward for total proceeds of $34.1 million. The Company recorded a net foreign exchange loss on long-term debt of $23.0 million in 2009 (2008 — unrealized gain of $73.0 million) in "Other income and charges". The amount recorded in 2009 was inclusive of both realized and unrealized losses.

At December 31, 2009, the unrealized gain on the remaining FX forward of $0.2 million (December 31, 2008 — $57.3 million) was included in "Prepaid pension costs and other assets".

Interest rate risk

This refers to the risk that the fair value or income and future cash flows of a financial instrument will vary as a result of changes in market interest rates.

In order to manage funding needs or capital structure goals, the Company enters into debt or capital lease agreements that are subject to either fixed market interest rates set at the time of issue or floating rates determined by on-going market conditions. Debt subject to variable interest rates exposes the Company to variability in interest expense, while debt subject to fixed interest rates exposes the Company to variability in the fair value of the debt.

The table below depicts the exposure to floating and fixed interest rates, with the exception of long-term floating rate notes and ABCP, for all financial assets and liabilities:

	As at December 31, 2009		As at December 31, 2008	
(in millions of Canadian dollars)	**At floating interest rates**	**At fixed interest rates**	At floating interest rates	At fixed interest rates
Financial assets				
Cash and short-term investments	**$679.1**	**$ –**	$117.6	$ –
Financial liabilities				
Short-term borrowings	**–**	**–**	150.1	–
Long-term debt[1]	**136.1**	**4,358.7**	384.4	4,345.4

[1] Includes impact of interest rate swaps.

INTEREST RATE MANAGEMENT

To manage interest rate exposure, the Company accesses diverse sources of financing and manages borrowings in line with a targeted range of capital structure, debt ratings, liquidity needs, maturity schedule, and currency and interest rate profiles. In anticipation of future debt issuance, the Company may enter into forward rate agreements such as treasury rate locks, bond forwards or forward starting swaps to substantially lock in all or a portion of the effective future interest expense. The Company may also enter into swap agreements to manage the mix of fixed and floating rate debt.

The table below depicts the annual impact to net income had interest rates increased or decreased by 50 basis points. As a result of the cash position at December 31, 2009 as rates increase, net income will also increase.

	Year ended December 31	
	2009	2008
(in millions of Canadian dollars)	**Impact to net income**	Impact to net income
50 basis point increase in rates	**$ 1.9**	$(1.4)
50 basis point decrease in rates	**(0.9)**	1.4

Note: All variables excluding interest rates are held constant.

INTEREST RATE SWAPS

In 2003 and 2004, the Company entered into fixed-to-floating interest rate swap agreements totalling US$200 million which converted a portion of our US$400 million 6.25% Notes to floating-rate debt. The Company paid an average floating rate that fluctuated quarterly based on LIBOR. These swaps were set to expire in 2011 and were accounted for as a fair value hedge.

During the second quarter of 2009, CP unwound its outstanding interest rate swap agreements for a gain of $16.8 million. The gain was deferred as a fair value adjustment to the underlying debt that was hedged and will be amortized to "Net interest expense" until such time that the 6.250% Notes are repaid.

Subsequent to the unwinding of this swap a portion of the underlying 6.250% Notes were repurchased in the second quarter and, as a result, a pro rata share of the fair value adjustment amounting to a $6.5 million gain was recognized immediately to "Other income and charges" as part of the net loss on repurchase of debt *(Note 18)*. For the remainder of 2009 the Company then amortized $2.4 million of the deferred gain to "Net interest expense".

Accounting for these Notes at the floating interest rate, prior to the unwind, decreased "Net interest expense" on the Company's Consolidated Statement of Income by $3.1 million in 2009 (2008 – $3.1 million).

INTEREST AND TREASURY RATE LOCKS

At December 31, 2009, the Company had no outstanding interest rate swaps. At December 31, 2008, an unrealized gain, derived from the fair value of the swaps, of $20.9 million was reflected in "Other" current assets and "Prepaid pension costs and other assets" with the offset reflected in "Long-term debt" on our Consolidated Balance Sheet. The fair value was calculated utilizing swap, currency and basis-spread curves from Bloomberg. These swaps were fully effective.

During 2007, the Company entered into derivative agreements, which were designated as cash flow hedges, that established the benchmark rate on $350.0 million of 30 year debt that was expected to be issued. These hedges were de-designated on May 13, 2008 when it was no longer probable that the Company would issue 30 year debt. On May 23, 2008, the fair value of these instruments was a loss of $30.9 million at the time of the issuance of the debt and the settlement of the derivative instrument. A gain of $1.3 million from the date of de-designation to the date of settlement of the derivative instrument was recorded in net income. Prior to de-designation, losses of $1.1 million due to ineffectiveness were recognized and recorded in net income during 2008. Effective hedge losses of $28.7 million were deferred in "Accumulated other comprehensive income" and will be amortized in earnings over 30 years as an adjustment to interest expense.

Stock-based compensation risk

This risk refers to the probability of increased compensation expense due to the increase in the Company's share price.

The Company's compensation expense is subject to volatility due to the movement of CP's share price and its impact on the value of certain management and director stock-based compensation programs. These programs, as described in the management proxy circular, include DSUs, RSUs, PSUs and TSARs. As the share price appreciates, these instruments are marked to market increasing compensation expense.

STOCK-BASED COMPENSATION EXPENSE MANAGEMENT

The Company entered into a TRS in May 2006 to reduce the volatility to the Company over time on three types of stock-based compensation programs: TSARs, DSUs and RSUs. The TRS is a derivative that provides price appreciation and dividends, in return for a charge by the counterparty. The swaps were intended to minimize volatility to "Compensation and benefits" expense by providing a gain to substantially offset increased compensation expense as the share price increased and a loss to offset reduced compensation expense when the share price falls. If stock-based compensation share units fall out of the money after entering the program, the loss associated with the swap would no longer be offset by any compensation expense reductions, which would reduce the effectiveness of the swap. Going forward the Company does not intend to expand its TRS program.

The table below depicts the annual impact to net income as a result of the TRS had the share price increased or decreased $1 from the closing share price on December 31, 2009 of $56.79.

	Year ended December 31	
	2009	2008
(in millions of Canadian dollars)	**Impact to Net income**	Impact to Net income
$1 increase in share price	**$ 1.1**	$ 1.8
$1 decrease in share price	**(1.1)**	(1.8)

Note: All variables excluding share price are held constant.

"Compensation and benefits" expense on the Company's Consolidated Statement of Income included a net gain on these swaps of $18.6 million in 2009 which was inclusive of both realized losses and unrealized gains (unrealized loss of $64.1 million in 2008). During 2009, in order to improve the effectiveness of the TRS in mitigating the volatility of stock-based compensation programs, CP unwound a portion of the program for a total cost of $31.1 million. At December 31, 2009, the unrealized loss on the remaining TRS of $18.2 million was included in "Accounts payable and accrued liabilities" on our Consolidated Balance Sheet (December 31, 2008 – $67.9 million included in "Other long-term liabilities").

Commodity risk

The Company is exposed to commodity risk related to purchases of diesel fuel and the potential reduction in net income due to increases in the price of diesel. Because fuel expense constitutes a large portion of the Company's operating costs, volatility in diesel fuel prices can have a significant impact on the Company's income. Items affecting volatility in diesel prices include, but are not limited to, fluctuations in world markets for crude oil and distillate fuels, which can be affected by supply disruptions and geopolitical events.

FUEL PRICE MANAGEMENT

The impact of variable fuel expense is mitigated substantially through fuel cost recovery programs which apportion incremental changes in fuel prices to shippers through price indices, tariffs, and by contract, within agreed upon guidelines. While these programs provide effective and meaningful coverage, residual exposure remains as the fuel expense risk cannot be completely recovered from shippers due to timing and volatility in the market. The Company continually monitors residual exposure, and where appropriate, may enter into derivative instruments.

Derivative instruments used by the Company to manage fuel expense risk may include, but are not limited to, swaps and options for crude oil, diesel and crack spreads. In addition, the Company may combine FX forward contracts with fuel derivatives to effectively hedge the risk associated with FX variability on fuel purchases and commodity hedges.

The table below depicts the annual impact to net income (excluding recoveries through freight pricing mechanisms) and OCI as a result of the Company's ultra low sulphur diesel forward contracts had the price changed by $0.01 from the closing price on December 31, 2009 of US$2.08 per US gallon (December 31, 2008 – $1.42 per US gallon):

	Year ended December 31	
	2009	2008
(in millions of Canadian dollars)	**Impact to Other comprehensive income**	Impact to Other comprehensive income
$0.01 increase in price per US gallon	**$ 0.1**	$ 0.1
$0.01 decrease in price per US gallon	**(0.1)**	(0.1)

Note: All variables excluding the price of US Gulf Coast ultra low sulphur diesel per barrel are held constant.

At December 31, 2009, the Company had diesel futures contracts, which are accounted for as cash flow hedges, to purchase approximately 13.5 million US gallons during the period January 2010 to December 2010 at an average price of US$1.96 per US gallon. This represents approximately 5% of estimated fuel purchases for this period. At December 31, 2009, the unrealized gain on these futures contracts was $2.5 million and was reflected in "Other" current assets with the offset, net of tax, reflected in "Accumulated other comprehensive income" on our Consolidated Balance Sheet. At December 31, 2008, the unrealized loss on futures contracts was $4.5 million and was reflected in "Accounts payable and accrued liabilities" with the offset, net of tax, reflected in "Accumulated other comprehensive income".

At December 31, 2009, the Company had no remaining crude futures contracts; these having been replaced by our diesel hedge program. In comparison, at December 31, 2008, the unrealized gain on crude futures contracts was $3.2 million and was reflected in "Other" current assets with the offset, net of tax, reflected in "Accumulated other comprehensive income" on our Consolidated Balance Sheet.

At December 31, 2009, the Company had no remaining FX forward contracts (which were used in conjunction with the crude purchases above). In comparison at December 31, 2008, the unrealized loss on these forward contracts was $0.1 million and was recognized in "Accounts payable and accrued liabilities" with the offset, net of tax, reflected in "Accumulated other comprehensive income" on our Consolidated Balance Sheet.

The impact of settled swaps increased "Fuel" expense in 2009 by $1.2 million due to a combination of realized losses of $0.8 million arising from settled commodity swaps and $0.4 million arising from settled FX forward contracts. The impact of settled swaps benefited "Fuel" expense in 2008 by $4.3 million as a result of realized gains of $6.1 million arising from settled swaps, partially offset by realized losses of $1.8 million arising from settled FX forward contracts. Included in the $0.8 million realized losses on commodity swaps in 2009 were $0.2 million in realized gains (2008 – realized losses $9.7 million) from settled derivatives that were not designated as hedges.

Credit risk

Credit risk refers to the possibility that a customer or counterparty will fail to fulfil its obligations under a contract and as a result create a financial loss for the Company. The Company's credit risk regarding its investment in long-term floating rate notes is discussed in more detail above.

CREDIT RISK MANAGEMENT

The railway industry predominantly serves financially established customers and the Company has experienced limited financial losses with respect to credit risk. The credit worthiness of customers is assessed using credit scores supplied by a third party, and through direct monitoring of their financial well-being on a continual basis. The Company establishes guidelines for customer credit limits and should thresholds in these

areas be reached, appropriate precautions are taken to improve collectibility. Pursuant to their respective terms, accounts receivable, net of allowances, are aged as follows at December 31:

(in millions of Canadian dollars)	**2009**	2008
Up to date	**$ 330.1**	$394.8
Under 30 days past due	**59.8**	163.0
30-60 days past due	**11.7**	33.7
61-90 days past due	**4.2**	17.5
Over 91 days past due	**13.8**	29.7
Trade accounts receivable	**$ 419.6**	$638.7

Counterparties to financial instruments expose the Company to credit losses in the event of non-performance. Counterparties for derivative and cash transactions are limited to high credit quality financial institutions, which are monitored on an ongoing basis. Counterparty credit assessments are based on the financial health of the institutions and their credit ratings from external agencies. With the exception of long-term floating rate notes, the Company does not anticipate non-performance that would materially impact the Company's financial statements.

With the exception of long-term floating rate notes, the Company believes there are no significant concentrations of credit risk. The maximum exposure to credit risk includes the Company's financial asset values reported in the table which, reconciles the carrying value positions of the Company's financial instruments with Consolidated Balance Sheet categories, and an indeterminable maximum under guarantees as discussed in Note 29.

Liquidity risk

The Company monitors and manages its liquidity risk to ensure access to sufficient funds to meet operational and investing requirements.

LIQUIDITY RISK MANAGEMENT

The Company has long-term debt ratings of "Baa3", "BBB", and "BBB" from Moody's, S&P, and DBRS respectively. The S&P rating has a negative outlook, while the Moody's and DBRS ratings have a stable outlook. It is CP's intention to manage it's long-term financing structure to maintain it's investment grade rating.

CP has in place a revolving credit facility of $945 million, with an accordion feature to $1,150 million, of which $330 million was committed for letters of credit and $615 million was available on December 31, 2009. This facility is arranged with a core group of 15 highly rated international financial institutions and incorporates pre-agreed pricing. Arrangements with 14 of the 15 financial institutions extend through November 2012, with one institution extending through November 2011. In addition, CP also has available from a financial institution a credit facility of $130 million, of which $130 million of this facility was available on December 31, 2009. The majority of this facility is available through the end of 2011. Both facilities are available on next day terms and are subject to a minimum debt to total capitalization ratio. Should the Company's senior unsecured debt not be rated at least investment grade by Moody's and S&P, the Company will be further required to maintain a minimum fixed charge coverage ratio. At December 31, 2009, the Company satisfied the thresholds stipulated in both financial covenants.

Surplus cash is invested in a range of short dated money market instruments meeting or exceeding the parameters of the Company's investment policy.

The table below reflects the contractual maturity of the Company's undiscounted cash flows for its financial liabilities and derivatives:

(in millions of Canadian dollars)	As at December 31, 2009			
	2010	**2011 – 2013**	**2014+**	**Total**
Financial liabilities				
Accounts payable and accrued liabilities	$ 750.5	$ –	$ –	$ 750.5
Dividends payable	41.7	–	–	41.7
Other long-term liabilities	–	55.5	45.7	101.2
Total return swap	18.2	–	–	18.2
Long-term debt[1]	670.3	1,272.8	6,556.5	8,499.6

[1] Includes contractual interest payments related to debt obligations. Interest rates on variable rate debt are based on prevailing rates at December 31, 2009.

20 Other long-term liabilities

(in millions of Canadian dollars)	**2009**	2008
Accrued employee benefits, net of current portion	**$ 234.4**	$ 226.9
Provision for environmental remediation, net of current portion[1]	**106.5**	130.2
Deferred workers' compensation and personal injury accruals, net of current portion	**88.0**	104.5
Provision for restructuring, net of current portion[2] (Note 22)	**57.5**	74.9
Deferred income credits	**38.0**	39.0
Deferred revenue on rights-of-way license agreements, net of current portion	**40.6**	45.4
Stock-based compensation liabilities, net of current portion	**36.8**	11.7
Asset retirement obligations (Note 21)	**26.6**	31.9
Deferred gain on sale leaseback	**44.3**	26.7
Total return swap, net of current portion (Note 19)	**–**	67.9
Long-term payable to shortline (Note 5)	**–**	20.6
Other, net of current portion	**117.5**	85.5
Total other long-term liabilities	**$ 790.2**	$ 865.2

[1] As at December 31, 2009, the aggregate provision for environmental remediation, including the current portion was $121.3 million (2008 – $151.1 million).

[2] As at December 31, 2009, the aggregate provision for restructuring, including the current portion was $77.0 million (2008 – $100.1 million).

The deferred revenue on rights-of-way license agreements, and deferred gain on sale leaseback are being amortized to income on a straight-line basis over the related lease terms. Deferred income credits are being amortized over the life of the related asset.

21 Asset retirement obligations

Asset retirement obligations ("ARO") are recorded in "Other long-term liabilities". The liabilities are discounted at 6.25%. Accretion expense is included in "Depreciation and amortization" on the Consolidated Statement of Income.

(in millions of Canadian dollars)	**2009**	2008
Opening balance, January 1	**$ 31.9**	$ 29.1
Liabilities incurred	**0.3**	3.7
Accretion	**1.8**	1.9
Liabilities settled	**(5.9)**	(2.2)
Revision to estimated cash flows	**(1.5)**	(0.6)
Closing balance, December 31	**$ 26.6**	$ 31.9

Upon the ultimate retirement of grain-dependent branch lines, the Company has to pay a fee, levied under the *Canada Transportation Act*, of $30,000 per mile of abandoned track. The undiscounted amount of the liability was $46.0 million at December 31, 2009 (2008 – $48.2 million), which, when present valued, was $24.5 million at December 31, 2009 (2008 – $26.6 million). The payments are expected to be made in the 2010 – 2044 period.

The Company also has a liability on a joint facility that will have to be settled upon retirement based on a proportion of use during the life of the asset. The estimate of the obligation at December 31, 2009, was $17.3 million (2008 – $16.7 million), which, when present valued, was $1.8 million at December 31, 2009 (2008 – $1.6 million). For purposes of estimating this liability, the payment related to the retirement of the joint facility is anticipated to be made in 35 years.

22 Restructuring accrual

At December 31, 2009, the provision for restructuring was $77.0 million (2008 – $100.1 million). The restructuring provision was primarily for labour liabilities. Payments are expected to continue in diminishing amounts until 2025.

Set out below is a reconciliation of CP's liabilities associated with its restructuring accrual:

(in millions of Canadian dollars)	**2009**	2008	2007
Opening balance, January 1	**$ 100.1**	$ 130.0	$ 188.8
Accrued (reduced)	**1.2**	1.9	(13.0)
Payments	**(27.0)**	(40.7)	(47.0)
Amortization of discount[1]	**5.9**	4.3	6.1
Foreign exchange impact	**(3.2)**	4.6	(4.9)
Closing balance, December 31	**$ 77.0**	$ 100.1	$ 130.0

[1] Amortization of discount is charged to income as "Compensation and benefits" (2009 – $2.3 million; 2008 – $2.5 million; 2007 – $3.3 million), and "Other income and charges" (2009 – $3.6 million; 2008 – $1.8 million; 2007 – $2.8 million), as applicable.

23 Shareholders' equity

AUTHORIZED AND ISSUED SHARE CAPITAL

The Company's Articles of Incorporation authorize for issuance an unlimited number of Common Shares and an unlimited number of First Preferred Shares and Second Preferred Shares. At December 31, 2009, no Preferred Shares had been issued.

An analysis of Common Share balances is as follows:

(in millions)	**2009 Number**	2008 Number
Share capital, January 1	**153.8**	153.3
Shares issued	**13.9**	–
Shares issued under stock option plans	**0.8**	0.5
Share capital, December 31	**168.5**	153.8

On February 3, 2009, CP filed a final prospectus offering for sale to the public, primarily in Canada and the U.S., up to 13,900,000 CP common shares at a price of $36.75 Canadian per share. The offering closed on February 11, 2009, at which time CP issued 13,900,000 common shares, including 1,300,000 common shares issued under the provisions of an over-allotment option available to the underwriters of the common share offering, for gross proceeds of approximately $511 million (proceeds net of fees and issue costs and including future taxes are $495.2 million).

The change in the "Share capital" balance includes $0.6 million (2008 – $2.6 million) related to the cancellation of the TSARs liability on exercise of tandem stock options, and $5.1 million (2008 – $10.0 million) of stock-based compensation transferred from "Contributed surplus".

In March 2007, the Company completed the filing for a new normal course issuer bid ("2007 NCIB") to cover the period of March 28, 2007 to March 27, 2008 to purchase, for cancellation, up to 5.0 million of its outstanding Common Shares. Effective April 30, 2007, the 2007 NCIB was amended to purchase, for cancellation, up to 15.3 million of its outstanding Common Shares. Of the 15.3 million shares authorized under the 2007 NCIB, 2.7 million shares were purchased at an average price per share of $73.64. As of December 31, 2008, the 2007 NCIB had expired.

In addition, pursuant to a notice of intention to make an exempt issuer bid filed on March 23, 2007, the Company purchased, for cancellation, 0.3 million shares through a private agreement with an arm's length third party on March 29, 2007 at an average price of $63.12.

24 Change in non-cash working capital balances related to operations

(in millions of Canadian dollars)	**2009**	2008	2007
Source (use) of cash:			
Accounts receivable	**$ 206.4**	$ (47.9)	$ 54.8
Materials and supplies	**75.5**	(23.4)	(28.7)
Other	**18.5**	(21.2)	15.8
Accounts payable and accrued liabilities	**(163.3)**	(6.2)	(45.5)
Income and other taxes payable	**(34.4)**	(33.5)	53.9
Change in non-cash working capital	**$ 102.7**	$ (132.2)	$ 50.3

25 Pensions and other benefits

The Company has both defined benefit ("DB") and defined contribution ("DC") pension plans.

The DB plans provide for pensions based principally on years of service and compensation rates near retirement. Pensions for Canadian pensioners are partially indexed to inflation. Annual employer contributions to the DB plans, which are actuarially determined, are made on the basis of being not less than the minimum amounts required by federal pension supervisory authorities.

Other benefits include post-retirement health and life insurance for pensioners, and post-employment long-term disability and workers' compensation benefits, which are based on Company-specific claims.

At December 31, the elements of net benefit cost for DB pension plans and other benefits recognized in the year included the following components:

	Pensions			Other benefits		
(in millions of Canadian dollars)	**2009**	2008 Restated (Note 2)	2007 Restated (Note 2)	**2009**	2008	2007
Current service cost (benefits earned by employees in the year)	**$ 67.1**	$ 97.6	$ 97.6	**$ 14.3**	$ 16.1	$ 16.8
Interest cost on benefit obligation	**482.2**	445.8	420.0	**29.1**	27.0	26.7
Actual (return) loss on fund assets	**(723.0)**	1,210.4	(275.9)	**(0.3)**	(0.3)	(1.2)
Actuarial (gain) loss	**847.1**[1]	(1,176.9)[2]	(1.4)	**57.5**[1]	(63.4)[2]	(1.1)
Plan amendments	**–**	42.0	22.5	**–**	–	–
Settlement gain	**–**	–	–	**(8.0)**[3]	(4.8)[3]	(10.7)[3]
Elements of employee future benefit cost, before adjustments to recognize the long-term nature of employee future benefit costs	**673.4**	618.9	262.8	**92.6**	(25.4)	30.5
Adjustments to recognize the long-term nature of employee future benefit costs:						
Amortization of transitional (asset) obligation	**(16.2)**	(16.2)	(16.2)	**12.4**	12.4	12.4
Difference between expected return and actual return on fund assets	**165.7**	(1,794.3)	(278.3)	**(0.6)**	(0.4)	0.6
Difference between actuarial loss/gain recognized and actual actuarial loss/gain on benefit obligation	**(839.7)**	1,254.9	99.9	**(57.0)**	68.3	6.8
Difference between amortization of prior service costs and actual plan amendments	**21.9**	(21.4)	(15.9)	**(0.2)**	(0.1)	(0.2)
Net benefit cost	**$ 5.1**	$ 41.9	$ 52.3	**$ 47.2**	$ 54.8	$ 50.1

(1) Actuarial loss for 2009 was largely the result of an increase in the discount rate.

(2) Actuarial gain for 2008 was largely the result of a decrease in the discount rate.

(3) Settlement gains from certain post-retirement benefit obligations being assumed by a U.S. national multi-employer benefit plan.

Information about the Company's DB pension plans and other benefits, in aggregate, is as follows:

(in millions of Canadian dollars)	Pensions 2009	Pensions 2008 Restated (Note 2)	Other benefits 2009	Other benefits 2008
Change in benefit obligation:				
Benefit obligation at January 1	**$ 7,068.3**	$ 8,025.8	**$ 438.0**	$ 491.7
Current service cost	**67.1**	97.6	**14.3**	16.1
Interest cost	**482.2**	445.8	**29.1**	27.0
Employee contributions	**48.4**	57.1	**0.3**	0.2
Benefits paid	**(457.5)**	(452.8)	**(39.5)**	(35.2)
Foreign currency changes	**(22.8)**	29.7	**(5.1)**	8.6
Actuarial loss (gain)	**847.1**	(1,176.9)	**57.5**	(63.4)
Plan amendments and other	**–**	42.0	**–**	–
Release due to settlement	**–**	–	**(10.5)**	(7.0)
Benefit obligation at December 31	**$ 8,032.8**	$ 7,068.3	**$ 484.1**	$ 438.0
Change in fund assets:				
Fair value of fund assets at January 1	**$ 6,118.5**	$ 7,610.5	**$ 12.1**	$ 12.5
Actual return (loss) on fund assets	**723.0**	(1,210.4)	**0.3**	0.3
Employer contributions	**595.2**	95.4	**38.3**	34.2
Employee contributions	**48.4**	57.1	**0.3**	0.2
Benefits paid	**(457.5)**	(452.8)	**(39.5)**	(35.2)
Foreign currency changes	**(13.8)**	18.7	**–**	0.1
Fair value of fund assets at December 31	**$ 7,013.8**	$ 6,118.5	**$ 11.5**	$ 12.1
Funded status – plan deficit:	**$ (1,019.0)**	$ (949.8)	**$ (472.6)**	$ (425.9)
Unamortized prior service cost	**28.0**	50.0	**(0.4)**	(0.7)
Unamortized net transitional (asset) obligation	**(47.9)**	(64.1)	**36.9**	49.3
Unamortized experience losses:				
Deferred investment losses due to use of market-related value to determine net benefit cost	**837.2**	1,204.0	**–**	–
Unamortized net actuarial loss	**1,845.3**[1]	814.8[1]	**86.7**	33.8
Accrued benefit asset (liability) on the Consolidated Balance Sheet	**$ 1,643.6**	$ 1,054.9	**$ (349.4)**	$ (343.5)

[1] The aggregate amount by which each pension plan's unamortized net actuarial loss exceeds the plan's 10% corridor (10% of the greater of the benefit obligation and the market-related asset value) was equal to $1,042.4 million at December 31, 2009 (2008 – $68.7 million). Any such excess is amortized, commencing in the following year, over the expected average remaining service period of active employees expected to receive benefits under the plan (December 31, 2009 – 10 years; December 31, 2008 – 10 years). In 2009, $7.4 million was amortized and included in the net benefit cost for pensions (2008 – $78.0 million).

The accrued benefit asset (liability) is included on the Company's Consolidated Balance Sheet as follows:

(in millions of Canadian dollars)	Pensions 2009	Pensions 2008 Restated (Note 2)	Other benefits 2009	Other benefits 2008
Prepaid pension costs and other assets	**$ 1,644.4**	$ 1,056.0	**$ –**	$ –
Accounts payable and accrued liabilities	**(0.2)**	(0.3)	**(40.6)**	(39.1)
Other long-term liabilities	**(0.6)**	(0.8)	**(308.8)**	(304.4)
Accrued benefit asset (liability) on the Consolidated Balance Sheet	**$ 1,643.6**	$ 1,054.9	**$ (349.4)**	$ (343.5)

The measurement date used to determine the plan assets and the accrued benefit obligation is December 31. The most recent actuarial valuation for pension funding purposes for the Company's main Canadian pension plan was performed as at January 1, 2008. The Company expects to file a new valuation as at January 1, 2010 with the regulator.

Actuarial assumptions used were approximately:

(percentage)	2009	2008	2007
Benefit obligation at December 31:			
Discount rate	**5.90**	7.00	5.60
Projected future salary increases	**3.00**	3.00	3.00
Health care cost trend rate	**8.50**[1]	9.00[1]	9.50[1]
Benefit cost for year ended December 31:			
Discount rate	**7.00**	5.60	5.40
Expected rate of return on fund assets	**7.75**	8.00	8.00
Projected future salary increases	**3.00**	3.00	3.00
Health care cost trend rate	**9.00**[1]	9.50[1]	10.00[1]

[1] The health care cost trend rate is projected to decrease by 0.5% per year from a 10.0% rate in 2006 and 2007 to approximately 5.0% per year in 2017.

Assumed health care cost trend rates have a significant effect on the amounts reported for the health care plans. A one-percentage-point change in the assumed health care cost trend rate would have the following effects:

Favourable (unfavourable) (in millions of Canadian dollars)	One percentage point increase	One percentage point decrease
Effect on the total of service and interest costs	$ (1.1)	$ 1.0
Effect on post-retirement benefit obligation	$ (11.7)	$ 11.2

PLAN ASSETS

The Company's pension plan asset allocation, and the current weighted average policy range for each major asset class, were as follows:

Asset allocation (percentage)	Current policy range	Percentage of plan assets at December 31 2009	2008
Equity securities	45 – 51	**45.9**	41.6
Debt securities	37 – 43	**42.3**	45.2
Real estate and infrastructure	8 – 16	**11.8**	13.2
Total		**100.0**	100.0

The Company's investment strategy is to achieve a long-term (five to ten year period) real rate of return of 5.25%, net of all fees and expenses. The Company's best estimate of long-term inflation of 2.5% yields a long-term nominal target of 7.75%, net of all fees and expenses. In identifying the asset allocation ranges, consideration was given to the long-term nature of the underlying plan liabilities, the solvency and

going-concern financial position of the plan, long-term return expectations and the risks associated with key asset classes as well as the relationships of returns on key asset classes with each other, inflation and interest rates. When advantageous and with due consideration, derivative instruments may be utilized, provided the total value of the underlying asset represented by financial derivatives, excluding currency forwards, is limited to 20% of the market value of the fund.

At December 31, 2009, fund assets consisted primarily of listed stocks and bonds, including 82,800 of the Company's Common Shares (2008 – 63,800) at a market value of $4.7 million (2008 – $2.6 million), 6.91% Secured Equipment Notes issued by the Company at a par value of $3.7 million (2008 – $3.8 million) and a market value of $4.0 million (2008 – $4.1 million), and 6.45% Unsecured Notes issued by the Company at a par value of $3.5 million (2008 – $nil) and a market value of $3.5 million (2008 – $nil).

CASH FLOWS

In 2009, the Company contributed $597.9 million to its pension plans (2008 – $98.5 million; 2007 – $89.6 million), including $2.7 million to the defined contribution plan (2008 – $3.1 million; 2007 – $3.2 million), $587.3 million to the Canadian registered and U.S. qualified defined benefit pension plans (2008 – $86.9 million; 2007 – $79.7 million), and $7.9 million to the Canadian non-registered supplemental pension plans (2008 – $8.5 million; 2007 – $6.7 million). The contributions to the Canadian registered defined benefit pension plan included a voluntary prepayment of $500 million in December 2009 and the contributions to the U.S. qualified defined benefit pension plans included a voluntary prepayment of $7.4 million in December 2009. These prepayments were made in order to reduce the volatility of future pension funding requirements. In addition, the Company made payments directly to employees, their beneficiaries or estates or to third-party benefit administrators of $38.3 million (2008 – $34.2 million; 2007 – $34.9 million) with respect to other benefits.

DEFINED CONTRIBUTION PLAN

Canadian non-unionized employees have the option to participate in the DC plan. The DC plan provides a pension based on total employee and employer contributions plus investment income earned on those contributions. Employee contributions are based on a percentage of salary. The Company matches employee contributions to a maximum percentage each year. In 2009, the net cost of this plan, which generally equals the employer's required contribution, was $2.7 million (2008 – $3.1 million; 2007 – $3.2 million).

26 Stock-based compensation

At December 31, 2009, the Company had several stock-based compensation plans, including stock option plans, various cash settled liability plans and an employee stock savings plan. These plans resulted in an expense in 2009 of $53.0 million (2008 – recovery of $23.7 million; 2007 – expense of $33.7 million).

A. STOCK OPTION PLANS

Regular options and TSARs

With the granting of regular options, employees may be simultaneously granted TSARs equivalent to the number of regular options granted (stock options granted prior to January 2009 were simultaneously granted TSARs equivalent to one-half the regular options granted). A TSAR entitles the holder to receive payment of an amount equal to the excess of the market value of a Common Share at the exercise date of the TSAR over the related option exercise price. On an ongoing basis, a liability for TSARs is accrued on the incremental change in the market value of the underlying stock and charged to income over the vesting period until exercised. TSARs may be exercised no earlier than two years and no later than 10 years after the grant date.

Where an option granted is a tandem award, the holder can choose to exercise an option or a TSAR of equal intrinsic value.

Performance options

Performance options vest after 48 months, unless certain performance targets are achieved, in which case vesting is accelerated, and will expire five years after the grant date ("performance-accelerated options"). Beginning in 2007, performance options granted will only vest when certain performance targets are achieved and will not vest if the performance targets are not achieved within a specific time frame. These options will expire five years and three months after the grant date ("performance-contingent options").

Summary of regular and performance options

The following tables summarize the Company's fixed stock option plans (that do not have a TSAR attached to them) as of December 31:

	2009		2008	
	Number of options	**Weighted average exercise price**	Number of options	Weighted average exercise price
Outstanding, January 1	**4,842,946**	**$50.74**	4,428,761	$44.58
New options granted	**350**	**37.60**	942,850	71.41
Exercised	**(652,175)**	**34.91**	(492,440)	33.89
Forfeited	**(96,825)**	**74.20**	(36,225)	63.67
Outstanding, December 31	**4,094,296**	**$52.71**	4,842,946	$50.74
Exercisable at December 31	**2,605,383**	**$44.07**	2,817,808	$39.72

	2009			2009	
	Options outstanding			Options exercisable	
Range of exercise prices	**Number of options**	**Weighted average years to expiration**	**Weighted average exercise price**	**Number of options**	**Weighted average exercise price**
$14.61 – $18.06	**17,375**	**0.2**	**$15.35**	**17,375**	**$15.35**
$27.62 – $40.47	**1,084,096**	**3.0**	**31.10**	**1,078,746**	**31.05**
$42.05 – $62.56	**2,106,625**	**4.3**	**56.20**	**1,506,562**	**53.68**
$63.45 – $74.89	**886,200**	**5.5**	**71.58**	**2,700**	**67.54**
Total	**4,094,296**	**4.2**	**$52.71**	**2,605,383**	**$44.07**

In 2009, the expense recovery for stock options (regular and performance) was $1.1 million (2008 – expense of $7.4 million; 2007 – expense of $10.7 million).

Under the fair value method, the fair value of options at the grant date was $nil for options issued in 2009 (2008 – $14.2 million; 2007 – $11.3 million). The weighted average fair value assumptions were approximately:

	2009	2008	2007
Expected option life (years)	**5.00**	4.39	4.00
Risk-free interest rate	**2.35%**	3.53%	3.90%
Expected stock price volatility	**23%**	23%	22%
Expected annual dividends per share	**$ 0.99**	$ 0.99	$ 0.90
Weighted average fair value of options granted during the year	**$ 6.52**	$ 15.07	$ 12.97

At December 31, 2009, there were 1,831,361 (2008 – 2,334,861; 2007 – 3,602,761) Common Shares available for the granting of future options under the stock option plans, out of the 15,578,642 (2008 – 15,578,642; 2007 – 15,578,642) Common Shares currently authorized.

Summary of TSARs

The following tables summarize information related to the Company's TSARs as at December 31:

	2009		2008	
	Number of TSARs	**Weighted average exercise price**	Number of TSARs	Weighted average exercise price
Outstanding, January 1	**2,828,197**	**$ 47.42**	2,552,347	$ 42.83
New TSARs granted	**765,850**	**36.76**	433,750	71.07
Exercised as TSARs	**(94,050)**	**27.06**	(52,450)	35.10
Exercised as Options	**(70,775)**	**25.95**	(85,425)	34.85
Forfeited	**(71,825)**	**51.73**	(20,025)	60.63
Outstanding, December 31	**3,357,397**	**$ 45.92**	2,828,197	$ 47.42
Exercisable at December 31	**1,981,810**	**$ 42.52**	1,740,235	$ 36.49

	2009			2009	
	TSARs outstanding			TSARs exercisable	
Range of exercise prices	**Number of TSARs**	**Weighted average years to expiration**	**Weighted average exercise price**	**Number of TSARs**	**Weighted average exercise price**
$14.61 – $18.06	**20,725**	**0.2**	**$15.23**	**20,725**	**$15.23**
$27.62 – $40.47	**1,655,727**	**5.9**	**33.54**	**907,477**	**31.25**
$42.05 – $62.56	**1,272,945**	**6.1**	**54.33**	**1,050,908**	**52.72**
$63.45 – $74.89	**408,000**	**8.0**	**71.49**	**2,700**	**67.54**
Total	**3,357,397**	**6.2**	**$45.92**	**1,981,810**	**$42.52**

In 2009, the expense for TSARs was $28.6 million (2008 – recovery of $35.3 million; 2007 – expense of $8.7 million).

B. OTHER SHARE-BASED PLANS

Performance share unit plan

During 2009, the Company granted 404,580 PSUs. These units attract dividend equivalents in the form of additional units based on the dividends paid on the Company's Common Shares. PSUs vest and are settled in cash approximately three years after the grant date contingent upon CP's performance (performance factor). The expense related to the PSUs is accrued based on the price of Common Shares at the end of the period and the anticipated performance factor, over the vesting period.

The following table summarizes information related to the PSUs as of December 31:

	2009	**2008**
Outstanding, January 1	**24,245**	23,855
Granted	**404,580**	–
Units, in lieu of dividends	**7,312**	390
Forfeited	**(13,603)**	–
Outstanding, December 31	**422,534**	24,245

In 2009, the expense recognized for PSUs was $10.2 million (2008 – expense recovery was $0.7 million, 2007 – expense of $0.7 million).

Deferred share unit plan

The Company established the DSU plan as a means to compensate and assist in attaining share ownership targets set for certain key employees and Directors. A DSU entitles the holder to receive, upon redemption, a cash payment equivalent to the market value of a Common Share at

the redemption date. DSUs vest over various periods of up to 36 months and are only redeemable for a specified period after employment is terminated.

Key employees may choose to receive DSUs in lieu of cash payments for certain incentive programs. In addition, when acquiring Common Shares to meet share ownership targets, key employees may be granted a matching number of DSUs up to 33% of the shares and DSUs acquired during the first six months after becoming eligible under the plan and, thereafter, up to 25%. Key employees have five years to meet their ownership targets.

An expense for DSUs is recognized over the vesting period for both the initial subscription price and the change in value between reporting periods.

The following table summarizes information related to the DSUs as of December 31:

	2009	**2008**
Outstanding, January 1	292,982	284,968
Granted	55,273	43,651
Units, in lieu of dividends	7,093	4,813
Redeemed	(9,505)	(40,450)
Outstanding, December 31	345,843	292,982

In 2009, the expense for DSUs was $7.5 million (2008 – expense recovery of $5.4 million; 2007 – expense of $4.1 million).

Restricted share unit plan

The Company issued 405 RSUs in 2009 (2008 – 276; 2007 – 16,921). The RSUs are subject to time vesting. They will vest on May 31, 2010, and will be cashed out based on the average closing price for the 10 days prior to May 31, 2010. An expense to income for RSUs is recognized over the vesting period.

In 2009, the expense for RSUs was $0.5 million (2008 – $0.2 million; 2007 – $0.2 million).

Summary of share based liabilities paid

The following table summarizes the total share based liabilities paid for each of the years ended December 31:

(in millions of Canadian dollars)	**2009**	**2008**	**2007**
Plan			
TSARs	**$ 2.6**	$ 1.6	$ 5.4
DSUs	**0.3**	2.4	6.5
Total	**$ 2.9**	$ 4.0	$ 11.9

C. EMPLOYEE SHARE PURCHASE PLAN

The Company has an employee share purchase plan whereby both employee and Company contributions are used to purchase shares on the open market for employees. The Company's contributions are expensed over the one-year vesting period. Under the plan the Company matches $1 for every $3 contributed by employees up to a maximum employee contribution of 6% of annual salary. On April 1, 2009, the Company suspended this match to employee ESPP contributions.

At December 31, 2009, there were 13,261 participants (2008 – 12,923; 2007 – 12,181) in the plan. The total number of shares purchased in 2009 on behalf of participants, including the Company contribution, was 883,737 (2008 – 969,921; 2007 – 745,374). In 2009, the Company's contributions totalled $3.3 million (2008 – $11.6 million; 2007 – $10.4 million) and the related expense was $7.0 million (2008 – $9.8 million; 2007 – $8.9 million).

27 Capital disclosures

The Company's objectives when managing its capital are:

- to maintain a flexible capital structure which optimizes the cost of capital at acceptable risk while providing an appropriate return to its shareholders;
- to manage capital in a manner which balances the interests of equity and debt holders;
- to manage capital in a manner that will maintain compliance with its financial covenants;
- to manage its long-term financing structure to maintain its investment grade rating; and
- to maintain a strong capital base so as to maintain investor, creditor and market confidence and to sustain future development of the business.

The Company defines its capital as follows:

- shareholders' equity;
- long-term debt, including the current portion thereof; and
- short-term borrowing.

The Company manages its capital structure and makes adjustments to it in accordance with the aforementioned objectives, as well as in light of changes in economic conditions and the risk characteristics of the underlying assets. In order to maintain or adjust its capital structure, the Company may, among other things, adjust the amount of dividends paid to shareholders, purchase shares for cancellation pursuant to normal course issuer bids, issue new shares, issue new debt, and/or issue new debt to replace existing debt with different characteristics.

The Company monitors capital using a number of key financial metrics, including:

- debt to total capitalization; and
- interest-coverage ratio.

The calculations for the aforementioned key financial metrics are as follows:

DEBT TO TOTAL CAPITALIZATION

Debt is the sum of long-term debt, long-term debt maturing within one year and short-term borrowing. This sum is divided by debt plus total shareholders' equity as presented on our Consolidated Balance Sheet.

INTEREST-COVERAGE RATIO

Interest coverage ratio is measured as adjusted EBIT divided by net interest expense. Adjusted EBIT excludes changes in the estimated fair value of the Company's investment in long-term floating rate notes/ABCP, the gains on sales of partnership interest and significant properties and the loss on termination of a lease with a shortline railway as these are not in the normal course of business and foreign exchange gains and losses on long-term debt, which can be volatile and short term. The interest coverage ratio and adjusted EBIT are non-GAAP measures and do not have standardized meanings prescribed by GAAP and, therefore, are unlikely to be comparable to similar measures of other companies.

The following table illustrates the financial metrics and their corresponding guidelines currently in place:

(in millions of Canadian dollars)	Guidelines	**December 31, 2009**	December 31, 2008 Restated (Note 2)	December 31, 2007 Restated (Note 2)
Long-term debt		**$ 4,102.7**	$ 4,685.8	$4,146.2
Long-term debt maturing within one year		**392.1**	44.0	31.0
Short-term borrowing		**–**	150.1	229.7
Debt		**$ 4,494.8**	$ 4,879.9	$4,406.9
Shareholders' equity		**$ 6,706.0**	$ 5,769.4	$5,248.1
Debt		**4,494.8**	4,879.9	4,406.9
Debt plus equity		**$11,200.8**	$10,649.3	$9,655.0
Revenues less operating expenses		**$ 900.1**	$ 1,041.7	$1,160.8
Less:				
Other income and charges		**18.9**	88.4	(118.7)
Plus:				
(Gain) loss in long-term floating rate notes/ABCP		**(6.3)**	49.4	21.5
Foreign exchange (gain) loss on long-term debt		**(5.8)**	16.3	(169.8)
Equity income in DM&E		**–**	50.9	11.2
Adjusted EBIT[1]		**$ 869.1**	$ 1,069.9	$1,142.4
Debt		**$ 4,494.8**	$ 4,879.9	$4,406.9
Debt plus equity		**$11,200.8**	$10,649.3	$9,655.0
Debt to total capitalization	**No more than 50.0%**	**40.1%**	45.8%	45.6%
Adjusted EBIT[1]		**$ 869.1**	$ 1,069.9	$1,142.4
Net interest expense		**$ 273.1**	$ 261.1	$ 204.3
Interest-coverage ratio[1]	**No less than 4.0**	**3.2**	4.1	5.6

[1] These earnings measures have no standardized meanings prescribed by GAAP and, therefore, are unlikely to be comparable to similar measures of other companies.

The Company remains in compliance with all external financial covenants.

The Company's financial objectives and strategy as described above have remained substantially unchanged over the last two fiscal years. The objectives are reviewed on an annual basis and financial metrics and their management targets are monitored on a quarterly basis. In 2009, the Company changed one of its measures used to monitor capital from net-debt to net-debt-plus-equity ratio to debt to total capitalization. The interest coverage ratio has decreased during the year ending December 31, 2009 due to a reduction in year-over-year earnings. The interest coverage ratio for the period is below the management target provided in the above table, due to lower volumes as a result of the global recession that occurred during the period.

In addition, CP issued 13,900,000 common shares generating net cash proceeds of $488.9 million and monetized certain assets to reduce indebtedness and to further strengthen its balance sheet and financial position due to ongoing uncertainty around the timing of the economic recovery.

The Company is also subject to a financial covenant of funded debt to total capitalization in the revolver loan agreement. Performance to this financial covenant is well within permitted limits.

28 Commitments and contingencies

In the normal course of its operations, the Company becomes involved in various legal actions, including claims relating to injuries and damage to property. The Company maintains provisions it considers to be adequate for such actions. While the final outcome with respect to actions

outstanding or pending at December 31, 2009, cannot be predicted with certainty, it is the opinion of management that their resolution will not have a material adverse effect on the Company's financial position or results of operations.

At December 31, 2009, the Company had committed to total future capital expenditures amounting to $233.4 million and operating expenditures amounting to $1,762.3 million for the years 2010-2028.

Minimum payments under operating leases were estimated at $930.1 million in aggregate, with annual payments in each of the five years following 2009 of (in millions): 2010 – $148.1; 2011 – $128.1; 2012 – $114.6; 2013 – $100.0; 2014 – $78.7.

29 Guarantees

In the normal course of operating the railway, the Company enters into contractual arrangements that involve providing certain guarantees, which extend over the term of the contracts. These guarantees include, but are not limited to:

- residual value guarantees on operating lease commitments of $167.3 million at December 31, 2009;
- guarantees to pay other parties in the event of the occurrence of specified events, including damage to equipment, in relation to assets used in the operation of the railway through operating leases, rental agreements, easements, trackage and interline agreements; and
- indemnifications of certain tax-related payments incurred by lessors and lenders.

The maximum amount that could be payable under these guarantees, excluding residual value guarantees, cannot be reasonably estimated due to the nature of certain of these guarantees. All or a portion of amounts paid under guarantees to other parties in the event of the occurrence of specified events could be recoverable from other parties or through insurance. The Company has accrued for all guarantees that it expects to pay. At December 31, 2009, these accruals amounted to $9.3 million (2008 – $9.6 million).

INDEMNIFICATIONS

Pursuant to a trust and custodial services agreement with the trustee of the Canadian Pacific Railway Company Pension Trust Fund, the Company has undertaken to indemnify and save harmless the trustee, to the extent not paid by the fund, from any and all taxes, claims, liabilities, damages, costs and expenses arising out of the performance of the trustee's obligations under the agreement, except as a result of misconduct by the trustee. The indemnity includes liabilities, costs or expenses relating to any legal reporting or notification obligations of the trustee with respect to the defined contribution option of the pension plans or otherwise with respect to the assets of the pension plans that are not part of the fund. The indemnity survives the termination or expiry of the agreement with respect to claims and liabilities arising prior to the termination or expiry. At December 31, 2009, the Company had not recorded a liability associated with this indemnification, as it does not expect to make any payments pertaining to it.

Pursuant to the Company's by-laws, the Company indemnifies all current and former directors and officers. In addition to the indemnity provided for in the by-laws, the Company also indemnifies its directors and officers pursuant to indemnity agreements. The Company carries a liability insurance policy for directors and officers, subject to a maximum coverage limit and certain deductibles in cases where a director or officer is reimbursed for any loss covered by the policy.

30 Segmented information

OPERATING SEGMENT

The Company operates in only one operating segment: rail transportation. Operating results by geographic areas, railway corridors or other lower level components or units of operation are not reviewed by the Company's chief operating decision maker to make decisions about the allocation of resources to, or the assessment of performance of, such geographic areas, corridors, components or units of operation.

In 2009, no one customer comprised more than 10% of total revenues and accounts receivable. For the years ended and as at December 31, 2008 and 2007, one customer comprised 11.3% and 11.5% of total revenues and 1.7% and 6.7% of total accounts receivable, respectively.

GEOGRAPHIC INFORMATION

(in millions of Canadian dollars)	Canada	United States	Total
2009			
Revenues	**$ 3,075.9**	**$ 1,227.3**	**$ 4,303.2**
Net properties	**$ 8,080.7**	**$ 3,887.1**	**$ 11,967.8**
2008 (Restated Note 2)			
Revenues	$ 3,814.6	$ 1,117.0	$ 4,931.6
Net properties	$ 7,954.4	$ 4,430.2	$ 12,384.6
2007 (Restated Note 2)			
Revenues	$ 3,716.4	$ 991.2	$ 4,707.6
Net Properties	$ 7,582.2	$ 1,535.5	$ 9,117.7

CP's principal subsidiaries present unconsolidated financial statements in accordance with generally accepted accounting practices for railways as prescribed in the regulations of the Canadian Transportation Agency and the Surface Transportation Board in the United States. As part of the Company's consolidation process, CP's subsidiaries' unconsolidated accounts have been adjusted from these regulatory accounting bases to Canadian GAAP.

The condensed income statement and balance sheet information, which follows, includes the Canadian operations prepared in accordance with the Uniform Classification of Accounts issued by the Canadian Transportation Agency. The changes required to consolidate the Company's operations are identified as consolidating entries.

CONSOLIDATING INFORMATION – 2009

(in millions of Canadian dollars)	Canada	United States	Other countries	Consolidating entries	Total
Revenues	**$ 3,072.1**	**$ 1,227.3**	**$ –**	**$ 3.8**	**$ 4,303.2**
Operating expenses	**2,479.6**	**960.4**	**–**	**(36.9)**	**3,403.1**
Revenues less operating expenses	**592.5**	**266.9**	**–**	**40.7**	**900.1**
Net interest expense, other income and charges, gain on sales of partnership interest and significant properties and loss on termination of lease with shortline railway	**(35.6)**	**88.2**	**136.4**	**(2.8)**	**186.2**
Income tax expense	**60.0**	**62.0**	**1.5**	**(22.0)**	**101.5**
Net income (loss)	**$ 568.1**	**$ 116.7**	**$ (137.9)**	**$ 65.5**	**$ 612.4**
Current assets	**$ 1,183.8**	**$ 472.5**	**$ 29.1**	**$ (258.0)**	**$ 1,427.4**
Net properties	**6,096.0**	**3,828.8**	**–**	**2,043.0**	**11,967.8**
Other long-term assets	**3,140.0**	**241.0**	**1,364.8**	**(2,609.6)**	**2,136.2**
Total assets	**$ 10,419.8**	**$ 4,542.3**	**$ 1,393.9**	**$ (824.6)**	**$ 15,531.4**
Current liabilities	**$ 1,162.6**	**$ 228.4**	**$ 2.0**	**$ (10.0)**	**$ 1,383.0**
Long-term liabilities	**5,710.1**	**2,160.5**	**(0.3)**	**(427.9)**	**7,442.4**
Shareholders' equity	**3,547.1**	**2,153.4**	**1,392.2**	**(386.7)**	**6,706.0**
Total liabilities and shareholders' equity	**$ 10,419.8**	**$ 4,542.3**	**$ 1,393.9**	**$ (824.6)**	**$ 15,531.4**

31 Reconciliation of Canadian and United States generally accepted accounting principles

The consolidated financial statements of the Company have been prepared in accordance with Canadian GAAP. The material differences between Canadian and U.S. GAAP relating to measurement and recognition are explained below, along with their effect on the Company's Consolidated Statement of Income and Consolidated Balance Sheet. Certain additional disclosures required under U.S. GAAP have not been provided, as permitted by the United States Securities and Exchange Commission.

(a) ACCOUNTING FOR DERIVATIVE INSTRUMENTS AND HEDGING AND OTHER FINANCIAL INSTRUMENTS:

The measurement and recognition rules for derivative instruments and hedging under Canadian GAAP, as described in CICA accounting standards Section 3855 "Financial Instruments, Recognition and Measurement", Section 3861 "Financial Instruments, Presentation and Disclosure", Section 3865 "Hedging", Section 1530 "Comprehensive Income" and Section 3251 "Equity", are largely harmonized with U.S. GAAP. However, under Canadian GAAP, only the ineffective portion of a net investment hedge that represents an over hedge is recognized in income, whereas under U.S. GAAP, any ineffective portion is recognized in income immediately. As well, transaction costs have been added to the fair value of the "Long-term debt" under Canadian GAAP whereas under U.S. GAAP such costs are recorded separately within "Other assets".

(b) PENSIONS AND POST-RETIREMENT BENEFITS:

Under U.S. GAAP, the Company is required to recognize the over or under funded status of defined benefit pension and other post-retirement plans on the balance sheet. The over or under funded status is measured as the difference between the fair value of the plan assets and the benefit obligation, being the projected obligation for pension plans and the accumulated benefit obligation for other post-retirement plans. In addition, any previously unrecognized actuarial gains and losses and prior service costs and credits that arise during the period will be recognized as a component of OCI, net of tax. No similar requirement currently exists under Canadian GAAP.

(c) POST-EMPLOYMENT BENEFITS:

Post-employment benefits are covered by the CICA recommendations for accounting for employee future benefits. Consistent with accounting for post-retirement benefits, the policy permits amortization of actuarial gains and losses only if they fall outside of the corridor. Under U.S. GAAP such gains and losses on post-employment benefits that do not vest or accumulate are included immediately in income.

(d) TERMINATION AND SEVERANCE BENEFITS:

Termination and severance benefits are covered by the CICA Section 3461 and the CICA Emerging Issues Committee Abstract 134 "Accounting for Severance and Termination Benefits" ("EIC 134"). Upon transition to the CICA Section 3461 effective January 1, 2000, a net transitional asset was created and was being amortized to income. This net transitional asset was fully amortized during 2009. Under U.S. GAAP, the expected benefits were not accrued and are expensed when paid.

(e) STOCK-BASED COMPENSATION:

U.S. GAAP requires the use of an option-pricing model to fair value, at the grant date, share-based awards issued to employees, including stock options, TSARs, PSUs, RSUs, and DSUs. TSARs, PSUs, RSUs, and DSUs are subsequently re-measured at fair value at each reporting period. Under Canadian GAAP, liability awards, such as TSARs, PSUs, RSUs and DSUs, are accounted for using the intrinsic method. U.S. GAAP also requires that CP accounts for forfeitures on an estimated basis. Under Canadian GAAP, CP has elected to account for forfeitures on an actual basis as they occur.

Under U.S. GAAP, compensation expense must be recorded if the intrinsic value of stock options is not exactly the same immediately before and after an equity restructuring. As a result of the Canadian Pacific Limited ("CPL") corporate reorganization in 2001, CPL underwent an equity restructuring, which resulted in replacement options in CP stock having a different intrinsic value after the restructuring than prior to it. Canadian GAAP did not require the revaluation of these options. The Company adopted on a prospective basis effective January 2003 the CICA Section 3870 "Stock-based Compensation and Other Stock-based Payments", which requires companies to account for stock options at their fair value. Concurrently, the Company elected to also account for stock options at their fair value under U.S. GAAP.

(f) INTERNAL USE SOFTWARE:

Under U.S. GAAP certain costs, including preliminary project phase costs, are to be expensed as incurred. These costs are capitalized under Canadian GAAP if they meet specific criteria in CICA Section 3064.

(g) CAPITALIZATION OF INTEREST:

Under Canadian GAAP, the Company expenses interest related to capital projects undertaken during the year unless specific debt is attributed to a capital program. U.S. GAAP requires interest costs to be capitalized for all qualifying capital programs. Differences in GAAP result in additional capitalization of interest under U.S. GAAP and subsequent related depreciation.

(h) COMPREHENSIVE INCOME:

U.S. GAAP requires disclosure of the change in equity from transactions and other events related to non-owner sources during the period. In 2009 and the comparative periods presented, the differences in OCI under U.S. GAAP arose from the accounting for foreign currency translation related to long-term debt designated as a hedge of the net investment in foreign subsidiaries and changes in the unfunded pension liability.

(i) JOINT VENTURE:

The CICA Section 3055 "Interest in Joint Ventures" requires the proportionate consolidation method to be applied to the recognition of interests in joint ventures in consolidated financial statements. Until April 1, 2009, the Company accounted for its joint-venture interest in the DRTP using the proportionate consolidation method. During the second quarter of 2009, the Company completed a sale of a portion of its investment in the DRTP to its existing partner, reducing the Company's ownership from 50% to 16.5% and thereby ceased to have joint control. Effective April 1, 2009, the Company discontinued proportionate consolidation and accounts for its remaining investment in the DRTP under the equity method of accounting, as the Company continues to exert significant influence. U.S. GAAP requires the equity method of accounting to be applied to interests in joint ventures. This had no effect on net income as it represents a classification difference within the Consolidated Statement of Income and Consolidated Balance Sheet. Equity income from DRTP in 2009 was $3.4 million (2008 – $8.6 million; 2007 – $9.7 million).

(j) OFFSETTING CONTRACTS:

U.S. GAAP does not allow netting of assets and liabilities among three parties. In 2003, the Company and one of its subsidiaries entered into a contract with a financial institution, which resulted in a payable by its subsidiary and a receivable by the Company. Under Canadian GAAP, offsetting amounts with the same party and with a legal right to offset are netted against each other.

(k) CAPITAL LEASES:

U.S. GAAP prescribes certain recognition criteria for a capital lease. As a result certain leases, which the Company has recorded as capital leases under Canadian GAAP, do not meet the criteria for capital leases and are recorded as operating leases. These relate to equipment leases, previously recorded as operating leases under Canadian and U.S. GAAP, which were renewed within the last 25 percent of the equipment's useful life. Under U.S. GAAP, these continue to be operating leases.

(l) STATEMENT OF CASH FLOWS:

There are no material differences in the Consolidated Statement of Cash Flows under U.S. GAAP.

(m) INVESTMENT TAX CREDITS:

Under U.S. GAAP investment tax credits are credited against income tax expense whereas under Canadian GAAP these tax credits are offset against the related operating expense.

FUTURE ACCOUNTING CHANGES

Consolidations

In June 2009, the Financial Accounting Standards Board ("FASB") issued *Amendments to Consolidation of Variable Interest Entities.* It retains the scope of the previous guidance with the addition of entities previously considered qualifying special-purpose entities. In addition, it replaces the previous quantitative approach for determining whether the enterprise's variable interest or interests give it a controlling financial interest in a variable interest entity with a qualitative analysis approach. The Statement is further amended to require ongoing reassessments of whether an enterprise is the primary beneficiary of a variable interest entity and requires enhanced disclosures about an enterprise's involvement in a variable interest entity. The Statement is effective at the beginning of the first annual reporting period after November 15, 2009. We do not expect the adoption of this Statement to have a material impact on our results of operations or financial position.

Accounting for Transfers of Financial Assets

The FASB has released additional guidance with respect to the accounting and disclosure of transfers of financial assets such as securitized accounts receivable. Although CP currently does not have an accounts receivable securitization program, the guidance, which includes revisions to the derecognition criteria in a transfer and the treatment of qualifying special purpose entities, is currently being assessed to determine if the changes in disclosure requirements would impact CP's prior periods. The new guidance is effective for CP from January 1, 2010.

Fair Value Measurements and Disclosure

In January 2010, the FASB amended the disclosure requirements related to fair value measurements. The update provides for new disclosures regarding transfers in and out of Level 1 and Level 2 financial asset and liability categories and expanded disclosure in the Level 3 reconciliation. The update also provides clarification that the level of disaggregation should be at the class level and that disclosures about inputs and valuation techniques are required for both recurring and nonrecurring fair value measurements that fall in either Level 2 or Level 3.

New disclosures and clarifications of existing disclosures are effective for interim and annual reporting periods beginning after December 15, 2009, except for the expanded disclosures in the Level 3 reconciliation, which are effective for fiscal years beginning after December 15, 2010. The adoption of this update will not impact the amounts reported in the Company's financial statements as it relates to disclosure.

COMPARATIVE INCOME STATEMENT

Consolidated net income and other comprehensive (loss) income is reconciled from Canadian to U.S. GAAP in the following manner:

(in millions of Canadian dollars, except per share data)	**2009**	2008 Restated (Note 2)	2007 Restated (Note 2)
Net income – Canadian GAAP	**$ 612.4**	$ 607.2	$ 932.1
Increased (decreased) by:			
Pension costs *(b)*	**(17.0)**	13.3	15.9
Post-retirement benefits costs *(b)*	**9.8**	9.6	9.4
Post-employment benefits costs *(c)*	**(30.3)**	11.0	7.2
Termination and severance benefits *(d)*	**(1.5)**	(8.7)	(8.8)
Internal use software – additions *(f)*	**(3.8)**	(18.1)	(12.0)
Internal use software – depreciation *(f)*	**7.4**	9.2	8.0
Stock-based compensation *(e)*	**(14.7)**	6.9	(1.7)
Loss on ineffective portion of hedges *(a)*	**(2.2)**	10.5	(0.4)
Capitalized interest – additions *(g)*	**4.9**	21.0	14.0
Capitalized interest – depreciation *(g)*	**(12.3)**	(5.3)	(4.5)
Capital lease – equipment rents *(k)*	**(1.3)**	(1.3)	(0.7)
Capital lease – depreciation *(k)*	**0.9**	0.9	0.4
Capital lease – interest *(k)*	**0.6**	0.5	0.3
Future/deferred income tax expense related to above differences	**2.5**	(21.1)	(46.0)
Net income – U.S. GAAP	**$ 555.4**	$ 635.6	$ 913.2
Other comprehensive (loss) income – Canadian GAAP	**(28.2)**	36.3	(39.4)
Increased (decreased) by:			
Unrealized foreign exchange gain (loss) on designated net investment hedge *(a)*	**2.2**	(10.5)	0.4
Unfunded pension and post-retirement liability adjustment *(b)*	**(661.1)**	(543.4)	(206.8)
Future/deferred income tax recovery related to other comprehensive loss	**165.2**	148.6	48.1
Other comprehensive loss – U.S. GAAP	**$ (521.9)**	$ (369.0)	$ (197.7)
Earnings per share – U.S. GAAP			
Basic earnings per share	**$ 3.34**	$ 4.14	$ 5.93
Diluted earnings per share	**$ 3.33**	$ 4.09	$ 5.87

A summary of comprehensive income resulting from Canadian and U.S. GAAP differences is as follows:

(in millions of Canadian dollars)	**2009**	2008 Restated (Note 2)	2007 Restated (Note 2)
Comprehensive income			
Canadian GAAP	**$ 584.2**	$ 643.5	$ 892.7
U.S. GAAP	**$ 33.5**	$ 266.6	$ 715.5

CONSOLIDATED BALANCE SHEET

Had the Consolidated Balance Sheet been prepared under U.S. GAAP, the differences would have been as follows (higher/(lower)):

(in millions of Canadian dollars)	**2009**	2008 Restated (Note 2)
Assets		
Current assets		
Cash and cash equivalents		
Investment in joint ventures *(i)*	**$ –**	$ (0.1)
Accounts receivable		
Receivable from bank *(j)*	**214.1**	–
Long-term assets		
Investments		
Investment in joint ventures *(i)*	**–**	51.2
Net properties		
Capitalized interest *(g)*	**168.3**	175.7
Internal use software *(f)*	**(59.9)**	(64.1)
Investment in joint ventures *(i)*	**–**	(36.0)
Capital leases *(k)*	**(8.7)**	(9.6)
Prepaid pension costs and other assets		
Pension *(b)*	**(1,644.4)**	(1,056.0)
Long-term receivable from bank *(j)*	**–**	201.8
Transaction costs on long-term debt *(a)*	**43.6**	43.9
Investment in joint ventures *(i)*	**–**	(15.7)
Internal use software *(f)*	**(0.6)**	–
Total assets	**$(1,287.6)**	$ (708.9)

CONSOLIDATED BALANCE SHEET (CONTINUED)

(in millions of Canadian dollars)	**2009**	2008 Restated (Note 2)
Liabilities and shareholders' equity		
Current liabilities		
Accounts payable and accrued liabilities		
Investment in joint ventures *(i)*	**$ –**	$ (0.3)
Stock-based compensation *(e)*	**9.8**	–
Long-term debt maturing within one year		
Capital leases *(k)*	**(0.9)**	(0.8)
Bank loan *(j)*	**214.1**	–
Long-term liabilities		
Other long-term liabilities		
Termination and severance benefits *(b)*	**–**	(1.5)
Post-employment benefit liability	**24.6**	(5.8)
Under funded status of defined benefit pension and other post-retirement plans	**1,116.8**	1,036.9
Investment in joint ventures *(i)*	**–**	(0.5)
Stock-based compensation *(e)*	**2.2**	(2.5)
Long-term debt		
Bank loan *(j)*	**–**	201.8
Capital leases *(k)*	**(8.1)**	(8.9)
Transaction costs on long-term debt *(a)*	**43.6**	43.9
Future/deferred income taxes	**(704.5)**	(536.6)
Total liabilities	**697.6**	725.7
Shareholders' equity		
Share capital		
Stock-based compensation *(e)*	**24.7**	21.5
Contributed surplus		
Stock-based compensation *(e)*	**(2.7)**	0.4
Retained income	**(211.4)**	(154.4)
Accumulated other comprehensive income		
Funding status of defined benefit pension and other post-retirement plans *(b)*	**(1,792.8)**	(1,297.2)
Unrealized foreign exchange (gain) loss on designated net investment hedge *(a)*	**(3.0)**	(4.9)
Total liabilities and shareholders' equity	**$ (1,287.6)**	$ (708.9)

FIVE-YEAR SUMMARY

(in millions of Canadian dollars)	**2009**	2008[1][3]	2007[1][2]	2006[1]	2005[1]
Income Statement					
Revenues					
Freight					
Grain	**$1,129.9**	$ 970.0	$ 938.9	$ 904.6	$ 754.5
Coal	**443.3**	607.5	573.6	592.0	728.8
Sulphur and fertilizers	**303.5**	508.6	502.0	439.3	447.1
Forest products	**173.2**	239.3	275.8	316.4	333.9
Industrial and consumer products	**766.6**	766.1	627.9	603.8	542.9
Automotive	**228.8**	323.5	319.0	314.4	298.0
Intermodal	**1,129.9**	1,399.8	1,318.0	1,256.8	1,161.1
	4,175.2	4,814.8	4,555.2	4,427.3	4,266.3
Other revenues	**128.0**	116.8	152.4	155.9	125.3
Total revenues	**4,303.2**	4,931.6	4,707.6	4,583.2	4,391.6
Operating expenses					
Compensation and benefits	**1,275.2**	1,306.1	1,275.0	1,348.1	1,339.3
Fuel	**580.2**	1,005.8	746.8	650.5	588.0
Materials	**215.1**	252.3	252.2	254.6	223.3
Equipment rents	**184.8**	182.2	207.5	181.2	210.0
Depreciation and amortization	**488.9**	442.5	427.5	426.9	414.8
Purchased services and other	**658.9**	701.0	637.8	638.7	637.0
Total operating expenses	**3,403.1**	3,889.9	3,546.8	3,500.0	3,412.4
Operating income[6]	**900.1**	1,041.7	1,160.8	1,083.2	979.2
Equity income (net of income tax) in Dakota, Minnesota & Eastern Railroad Corporation (DM&E)	**—**	50.9	11.2	—	—
Less:					
Other income and charges, before foreign exchange gains and losses on long-term debt and other specified items[4][5][6]	**31.0**	22.7	29.6	27.8	18.1
Net interest expense	**273.1**	261.1	204.3	194.5	204.2
Income tax expense, before income tax on foreign exchange gains and losses on long-term debt and income tax on other specified items[4][5][6]	**135.7**	189.1	268.7	264.6	243.7
Income, before foreign exchange gains and losses on long-term debt and other specified items[4][5][6]	**460.3**	619.7	669.4	596.3	513.2
Foreign exchange gain (loss) on long-term debt (net of income tax)[5]	**(25.8)**	22.3	125.5	(7.2)	22.3
Other specified items (net of income tax)[4][6]	**177.9**	(34.8)	137.2	166.2	(7.7)
Net income	**$ 612.4**	$ 607.2	$ 932.1	$ 755.3	$ 527.8

(1) Certain comparative period figures have been restated for the adoption of CICA accounting standard 3064 and accounting policy changes related to pension prior service costs and locomotive overhauls.

(2) The 2007 figures include equity income for DM&E from October 30, 2007 to December 31, 2007.

(3) The 2008 figures include the results of the DM&E on an equity accounting basis through October 29, 2008 and on a fully consolidated basis after that date.

(4) Before other specified items as follows: For 2009, a $54.5 million loss on termination of lease with a shortline railway ($37.6 million after tax), a gain of $160.3 million on sales of partnership interest and significant properties ($136.8 million after tax), a $6.3 million gain in fair value of long-term floating rate notes ($4.5 million after tax), and income tax benefits of $74.2 million due to Provincial income tax rate reductions and a settlement related to a prior year; for 2008, a $49.4 million loss in fair value of Canadian third party asset-backed commercial paper ($34.8 million after tax); for 2007, a $152.2 million income tax benefit was recorded due to Federal income tax rate reductions which was offset by a $21.5 million loss in fair value of Canadian third party asset-backed commercial paper ($15.0 million after tax); for 2006, a $166.2 million income tax benefit was recorded due to Federal and Provincial income tax rate reductions; for 2005, a $33.9 million ($20.6 million after tax) reduction to environmental remediation and a $44.2 million ($28.3 million after tax) special charge for labour restructuring.

(5) Before foreign exchange gain (loss) on long-term debt as follows: For 2009, a $5.8 million ($25.8 million loss after tax) foreign exchange gain on long-term debt; for 2008, a $16.3 million ($22.3 million gain after tax) foreign exchange loss on long-term debt; for 2007, a $169.8 million ($125.5 million after tax) foreign exchange gain on long-term debt; for 2006, a $0.1 million ($7.2 million after tax) foreign exchange loss on long-term debt, for 2005, a $44.7 million ($22.3 million after tax) foreign exchange gain on long-term debt.

(6) These are earnings measures that are not in accordance with GAAP and may not be comparable to similar measures of other companies. CP's results, before foreign exchange gains and losses on long-term debt and other specified items as defined in this summary, are presented to provide the reader with information that is readily comparable to prior years' results. By excluding foreign exchange gains and losses on long-term debt, the impact of volatile short-term exchange rate fluctuations, which can only be realized when long-term debt matures or is settled, is largely eliminated. By also excluding other specified items, the results better reflect ongoing operations at CP.

SHAREHOLDER INFORMATION

COMMON SHARE MARKET PRICES

Toronto Stock Exchange (Canadian dollars)	2009 High	2009 Low	2008 High	2008 Low
First Quarter	**46.09**	**32.36**	74.74	57.30
Second Quarter	**48.41**	**36.80**	75.00	63.98
Third Quarter	**55.96**	**38.35**	68.75	53.80
Fourth Quarter	**58.17**	**45.41**	57.86	34.24
Year	**58.17**	**32.36**	75.00	34.24

New York Stock Exchange (U.S. dollars)	High	Low	High	Low
First Quarter	**38.98**	**25.11**	76.18	55.39
Second Quarter	**43.91**	**29.19**	76.14	62.84
Third Quarter	**51.64**	**32.96**	68.33	51.75
Fourth Quarter	**55.43**	**42.05**	53.70	26.64
Year	**55.43**	**25.11**	76.18	26.64

Number of registered shareholders at year end:	17,437
Closing market prices at year end:	
Toronto Stock Exchange:	CDN$ 56.79
New York Stock Exchange:	US$ 54.00

SHAREHOLDER ADMINISTRATION

Common Shares

Computershare Investor Services Inc., with transfer facilities in Montreal, Toronto, Calgary and Vancouver, serves as transfer agent and registrar for the Common Shares in Canada. Computershare Trust Company NA, Denver, Colorado, serves as co-transfer agent and co-registrar for the Common Shares in the United States.

For information concerning dividends, lost share certificates, estate transfers or for change in share registration or address, please contact the transfer agent and registrar by telephone at 1-877-427-7245 toll free North America or International (514) 982-7555, visit their website at www.computershare.com/cp ; or write to:

Computershare Investor Services Inc.
100 University Avenue, 9th Floor
Toronto, Ontario Canada M5J 2Y1

INFORMATION REGARDING DIRECT REGISTRATION

The Direct Registration System, or DRS, allows registered holders to hold securities in "book entry" form without having a physical certificate issued as evidence of ownership. Instead, securities are held in the name of the registered holder and registered electronically on the issuer's records maintained by the issuer's transfer agent. If you are a registered holder of shares and wish to hold your shares using the DRS, please contact the transfer agent at the phone number or address shown above, or for more information about direct registration, log on to Computershare's website at www.computershare.com/investorcentrecanada and click on "Questions and Answers".

4% CONSOLIDATED DEBENTURE STOCK

Inquiries with respect to Canadian Pacific Railway Company's 4% Consolidated Debenture Stock should be directed as follows:

For stock denominated in U.S. currency – The Bank of New York Mellon at (212) 815-2719 or by e-mail at lesley.daley@bnymellon.com and;
For stock denominated in pounds Sterling – BNY Trust Company of Canada at (416) 933-8504 or by e-mail at marcia.redway@bnymellon.com.

MARKET FOR SECURITIES

The Common Shares of Canadian Pacific Railway Limited are listed on the Toronto and New York stock exchanges. The Debenture Stock of Canadian Pacific Railway Company is listed on the London Stock Exchange (UK pounds sterling) and on the New York Stock Exchange (U.S. currency).

TRADING SYMBOL

Common Shares – CP

DUPLICATE ANNUAL REPORTS

While every effort is made to avoid duplication, some Canadian Pacific Railway Limited registered shareholders may receive multiple copies of shareholder information mailings such as this Annual Report. Registered shareholders who wish to consolidate any duplicate accounts which are registered in the same name are requested to write to Computershare Investor Services Inc.

DIRECT DEPOSIT OF DIVIDENDS

Registered shareholders are offered the option of having their Canadian and U.S. dollar dividends directly deposited into their personal bank accounts in Canada and the United States on the dividend payment dates. Shareholders may obtain a direct deposit enrolment form from Computershare Investor Services Inc.

CORPORATE GOVERNANCE

Canadian Pacific's Board of Directors and its management are committed to a high standard of corporate governance. They believe effective corporate governance calls for the establishment of processes and structures that contribute to the sound direction and management of the Corporation's business, with a view to enhancing shareholder value.

A detailed description of CP's approach to corporate governance is contained in its Management Proxy Circular issued in connection with the 2010 Annual and Special Meeting of Shareholders.

GOVERNANCE STANDARDS

Any significant differences between the Corporation's corporate governance practices and those set forth in the corporate governance listing standards ("Listing Standards") of the New York Stock Exchange ("NYSE") are set forth on Canadian Pacific Railway Limited's website www.cpr.ca under "Governance".

CHIEF EXECUTIVE OFFICER AND CHIEF FINANCIAL OFFICER CERTIFICATION

The certifications (the "302 Certifications") of the Chief Executive Officer and the Executive Vice-President and Chief Financial Officer of each of Canadian Pacific Railway Limited and Canadian Pacific Railway Company required by Section 302 of the *Sarbanes-Oxley Act of 2002* and the rules promulgated by the Securities and Exchange Commission ("SEC") thereunder, have been filed with the SEC as an exhibit to the Annual Report of Canadian Pacific Railway Limited and Canadian Pacific Railway Company on Form 40-F. The 302 Certifications have also been filed in fulfillment of the requirements of National Instrument 52-109.

2010 ANNUAL AND SPECIAL MEETING

The Annual and Special Meeting of Shareholders will be held on Friday, May 21, 2010, at The Fairmont Palliser Hotel located at 133 – 9th Avenue SW, Calgary, Alberta, at 9:00 a.m. Mountain Time.

SHAREHOLDER SERVICES

Shareholders having inquiries or wishing to obtain copies of the Corporation's Annual Information Form may contact Shareholder Services at 1-866-861-4289 or (403) 319-7538, or by e-mail at shareholder@cpr.ca, or by writing to:

Shareholder Services, Office of the Corporate Secretary, Canadian Pacific, Suite 920, Gulf Canada Square,401- 9th Avenue S.W., Calgary, Alberta, Canada T2P 4Z4

INVESTOR INFORMATION

Financial information is available under the Investor Section on CP's Web site at www.cpr.ca.

COMMUNICATIONS AND PUBLIC AFFAIRS

Contact Communications and Public Affairs, Canadian Pacific, Suite 500, Gulf Canada Square, 401- 9th Avenue S.W., Calgary, Alberta, Canada, T2P 4Z4

DIRECTORS & COMMITTEES

John E. Cleghorn, O.C., F.C.A.[(2)]
Chairman
Canadian Pacific Railway Limited
Toronto, Ontario

Tim W. Faithfull[(2)(3)*(4)]
Retired President and Chief Executive Officer
Shell Canada Limited
Oxford, Oxfordshire, England

Frederic J. Green[(3)]
President and Chief Executive Officer
Canadian Pacific Railway Limited
Calgary, Alberta

Krystyna T. Hoeg, C.A.[(1)(5)]
Former President and Chief Executive Officer
Corby Distilleries Limited
Toronto, Ontario

Richard C. Kelly[(1)(3)]
Chairman and Chief Executive Officer
Xcel Energy, Inc.
Minneapolis, Minnesota

The Honourable John P. Manley[(1)(2)(5)*]
President and Chief Executive Officer
Canadian Council of Chief Executives
Ottawa, Ontario

Linda J. Morgan[(3)(4)]
Counsel
Covington & Burling LLP
Bethesda, Maryland

Madeleine Paquin[(3)(4)]
President and Chief Executive Officer
Logistec Corporation
Montreal, Quebec

Michael E.J. Phelps, O.C.[(2)(4)*(5)]
Chairman
Dornoch Capital Inc.
West Vancouver, British Columbia

Roger Phillips, O.C., S.O.M., F.Inst.P.[(1)(2)*(5)]
Retired President and Chief Executive Officer
IPSCO Inc.
Regina, Saskatchewan

David W. Raisbeck[(1)(5)]
Retired Vice-Chairman
Cargill Inc.
Sanibel, Florida

Hartley T. Richardson, C.M., O.M.[(4)(5)]
President and Chief Executive Officer
James Richardson & Sons, Limited
Winnipeg, Manitoba

Michael W. Wright[(1)*(2)(3)]
Retired Chairman of the Board and Chief Executive Officer
SUPERVALU INC.
Longboat Key, Florida

(1) Audit, Finance and Risk Management Committee
(2) Corporate Governance and Nominating Committee
(3) Health, Safety, Security and Environment Committee
(4) Management Resources and Compensation Committee
(5) Pension Committee
* denotes chairman of the committee

SENIOR OFFICERS OF THE COMPANY

John E. Cleghorn, O.C., F.C.A.
Chairman of the Board
Toronto, Ontario

Frederic J. Green[1]
President and Chief Executive Officer
Calgary, Alberta

Kathryn B. McQuade[1]
Executive Vice-President and Chief Financial Officer
Mesquite, Nevada

Jane A. O'Hagan[1]
Senior Vice-President, Strategy and Yield
Calgary, Alberta

Brock M. Winter[1]
Senior Vice-President, Operations
Calgary, Alberta

Raymond H. Foot[1]
Group Vice-President, Sales
Calgary, Alberta

J. Michael Franczak[1]
Group Vice-President, Operations
Calgary, Alberta

J. Robert Milloy[1]
Group Vice-President, Marketing and Yield
Calgary, Alberta

R. Andrew Shields[1]
Group Vice-President, Human Resources and Industrial Relations
Calgary, Alberta

Marlowe G. Allison
Vice-President and Treasurer
Calgary, Alberta

Donald B. Campbell[1]
Vice-President, Finance
Calgary, Alberta

Brian W. Grassby[1]
Vice-President and Comptroller
Calgary, Alberta

Paul A. Guthrie, Q.C.[1]
Vice-President, Law
Municipal District of Rocky View, Alberta

Karen L. Fleming
Senior Counsel and Corporate Secretary
Calgary, Alberta

[1] Executive Committee of Canadian Pacific Railway Company

vancouver 2010

vancouver 2010
PARALYMPIC GAMES
JEUX PARALYMPIQUES

CANADIAN PACIFIC

OFFICIAL SUPPORTER

FSC
Mixed Sources
Product group from well-managed forests and other controlled sources

Cert no. SGS-COC-3028
www.fsc.org
© 1996 Forest Stewardship Council

U.S. Department of Transportation
Federal Railroad Administration

Certifications Regarding Debarment, Suspension and Other Responsibility Matters, Drug-Free Workplace Requirements and Lobbying

PART A: Certification Regarding Debarment, Suspension and Other Responsibility Matters – Primary Covered Transactions (Pursuant to 2 CFR Part 180)

(1) The grantee certifies to the best of its knowledge and belief, that it and its principles:

(a) Are not presently debarred, suspended, proposed for debarment, declared ineligible, or voluntarily excluded by any Federal department or agency;

(b) Have not within a three-year period preceding this application been convicted of or had a civil judgment rendered against them for commission of fraud or a criminal offense in connection with obtaining, attempting to obtain, or performing a public (Federal, State or local) transaction or contract under a public transaction; violation of Federal of State antitrust statutes or commission of embezzlement, theft, forgery, bribery, falsification or destruction of records, making false statements, or receiving stolen property;

(c) Are not presently indicted for or otherwise criminally or civilly charged by a governmental entity (Federal, State or local) with commission of any of the offenses enumerated in paragraph (1)(b) of this certification; and

(d) Have not within a three-year period preceding this application had one or more public transactions (Federal, State or local) terminated for cause or default.

(2) Where the grantee is unable to certify to any of the statements of this certification, he or she shall attach an explanation to this application.

PART B: Certification Regarding Drug-Free Workplace Requirements (Pursuant to 49 CFR Part 32)

A. The grantee certifies that it will or continue to provide a drug-free workplace by:

(a) Publishing a statement notifying employees that the unlawful manufacture, distribution, dispensing, possession, or use of a controlled substance is prohibited in the grantee's workplace and specifying the actions that will be taken against employees for violation of such prohibition;

(b) Establishing an ongoing drug-free awareness program to inform employees about—
   (1) The dangers of drug abuse in the workplace;
   (2) The grantee's policy of maintaining a drug-free workplace;
   (3) Any available drug counseling, rehabilitation, and employee assistance programs; and
   (4) The penalties that may be imposed upon employees for drug abuse violations occurring in the workplace;

(c) Making it a requirement that each employee to be engaged in the performance of the grant be given a copy of the statement required by paragraph (a);

(d) Notifying the employee in the statement required by paragraph (a) that, as a condition of employment under the grant, the employee will—
   (1) Abide by the terms of the statement; and
   (2) Notify the employer in writing of his or her conviction for a violation of criminal drug statute occurring in the workplace no later than five calendar days after such conviction;

(e) Notifying the agency in writing, within ten calendar days after receiving notice under subparagraph (d)(2) from an employee or otherwise receiving actual notice of such conviction. Employers of convicted employees must provide notice, including position title, to every grant officer on whose grant activity the convicted employee was working, unless the Federal agency has designated a central point for the receipt of such notices. Notice shall include the identification number(s) of each affected grant;

(f) Taking one of the following actions, within 30 calendar days of receiving notice under subparagraph (d)(2), with respect to any employee is so convicted—
   (1) Taking appropriate personnel action against such an employee, up to and including termination, consistent with the requirements of the Rehabilitation Act of 1973, as amended; or
   (2) Requiring such employee to participate satisfactorily in a drug abuse assistance or rehabilitation program approved for such purposes by a Federal, State, or local health, law enforcement, or other appropriate agency;

(g) Making a good faith effort to continue to maintain a drug-free workplace through implementation of paragraphs (a), (b), (c), (e) and (f).

B. The grantee may insert in the space below the site(s) for the performance of work done in connection with the specific grant:

Place of Performance (Street address, city, county, state, zip code)

_____

_____

_____

Check ____if there are workplaces on file that are not identified here.

PART C: Certification Regarding Lobbying (Pursuant to 49 CFR Part 20)

CHECK_____IF APPLICABLE
CERTIFICATION IS FOR THE AWARD OF A GRANT OR COOPERATIVE AGREEMENT EXCEEDING $100,000
OR
A FEDERAL LOAN EXCEEDING $150,000

The undersigned certifies, to the best of his or her knowledge and belief, that:

(1) No Federal appropriated funds have been paid or will be paid, by or on behalf of the undersigned, to any person for influencing or attempting to influence an officer or employee of an agency, a Member of Congress, an officer or employee of Congress, or an employee of a Member of Congress in connection with the awarding of any Federal contract, the making of any Federal grant, the making of any Federal loan, the entering into of any cooperative agreement, and the extension, continuation, renewal, amendment, or modification of any Federal contract, grant, loan, or cooperative agreement.

(2) If any funds other than Federal appropriated funds have been paid or will be paid to any person for influencing or attempting to influence an officer or employee of any agency, a Member of Congress, an officer or employee of Congress, or an employee of a Member of Congress in connection with this Federal contract, grant, loan, or cooperative agreement, the undersigned shall complete and submit Standard Form-LLL, "Disclosure Form to Report Lobbying," in accordance with its instructions.

(3) The undersigned shall require that the language of this certification be included in the award document for all subawards at all tiers (including subcontracts, subgrants, and contracts under grants, loans, and cooperative agreements) and that all subrecipients shall certify accordingly.

This certification is a material representation of fact upon which reliance was placed when this transaction was made or entered into. Submission of this certification is a prerequisite for making or entering into this transaction imposed by 31 USC 1352. Any person who fails to file the required certification shall be subject to a civil penalty of not less than $10,000 and not more than $100,000 for each such failure.

As the authorized certifying official, I hereby certify that the certifications in Parts A, B, and C (if C is applicable) are true.

_____

SIGNATURE OF AUTHORIZED CERTIFYING OFFICIAL

_____

TYPED NAME AND TITLE

_____

DATE

Detailed Capital Cost Budget

Instructions:
To assist FRA in comparing projects, this form provides a breakdown of capital cost using Standard Cost Categories (SCCs). Definitions of FRA's SCCs can be found in the "Capital Cost Info" tab of this workbook. The data you enter in this form should be drawn from budget estimates or analysis you have available for your project.

1. Enter values in the yellow cells below. You should only provide data for those costs categories associated with this project; leave others blank.

2. The light blue cells will auto-populate based on the Contingency rates entered in "General Info."

3. Explain any large discrete, identifiable and/or unique capital investments in the space provided at the end of this form. Where an explanation is appropriate, place an asterisk in the far right column to denote that an explanation is provided. Please include the reference to the Cost Category number in your explanation. Example: "10.07: Tunnel at xxxx [location], x.x miles in length, consists of one twin-tube New Austrian Tunneling Method tunnel with cross-passages located every .25 miles."

4. For purposes of this application "Base Year Dollars" are Fiscal Year (FY) 2010 Dollars.

Project Name: CP Wadsworth Bridge Replacements

	APPLICANT INPUTS							
	Unit	Quantity	Unit Cost (Base Yr/FY 10)	Non-Unit Based Costs	Total Allocated Cost (Base Yr/FY10 Dollars)	Allocated Contingency (Base Yr/FY10 Dollars)	TOTAL COST (Base Yr/FY10 Dollars)	Explanation Provided? (if so use *)
10 TRACK STRUCTURES & TRACK					$ 6,197,813	$ 619,781	$ 6,817,594	
10.01 Track structure: Viaduct	Miles				$ -	$ -	$ -	
10.02 Track structure: Major/Movable bridge					$ -	$ -	$ -	
10.03 Track structure: Undergrade Bridges				$ 6,197,813	$ 6,197,813	$ 619,781	$ 6,817,594	
10.04 Track structure: Culverts and drainage structures	#				$ -	$ -	$ -	
10.05 Track structure: Cut and Fill (> 4' height/depth)	Miles				$ -	$ -	$ -	
10.06 Track structure: At-grade (grading and subgrade stabilization)	Miles				$ -	$ -	$ -	
10.07 Track structure: Tunnel					$ -	$ -	$ -	
10.08 Track structure: Retaining walls and systems	Miles				$ -	$ -	$ -	
10.09 Track new construction: Conventional ballasted					$ -	$ -	$ -	
10.10 Track new construction: Non-ballasted					$ -	$ -	$ -	
10.11 Track rehabilitation: Ballast and surfacing					$ -	$ -	$ -	
10.12 Track rehabilitation: Ditching and drainage					$ -	$ -	$ -	
10.13 Track rehabilitation: Component replacement (rail, ties, etc)					$ -	$ -	$ -	
10.14 Track: Special track work (switches, turnouts, insulated joints)					$ -	$ -	$ -	
10.15 Track: Major interlockings					$ -	$ -	$ -	
10.16 Track: Switch heaters (with power and control)					$ -	$ -	$ -	
10.17 Track: Vibration and noise dampening					$ -	$ -	$ -	
10.18 Other linear structures including fencing, sound walls	Miles				$ -	$ -	$ -	
20 STATIONS, TERMINALS, INTERMODAL					$ -	$ -	$ -	
20.01 Station buildings: Intercity passenger rail only					$ -	$ -	$ -	
20.02 Station buildings: Joint use (commuter rail, intercity bus)					$ -	$ -	$ -	
20.03 Platforms					$ -	$ -	$ -	
20.04 Elevators, escalators					$ -	$ -	$ -	
20.05 Joint commercial development					$ -	$ -	$ -	
20.06 Pedestrian / bike access and accommodation, landscaping,					$ -	$ -	$ -	
20.07 Automobile, bus, van accessways including roads					$ -	$ -	$ -	
20.08 Fare collection systems and equipment					$ -	$ -	$ -	
20.09 Station security					$ -	$ -	$ -	
30 SUPPORT FACILITIES: YARDS, SHOPS, ADMIN. BLDGS					$ -	$ -	$ -	
30.01 Administration building: Office, sales, storage, revenue counting					$ -	$ -	$ -	
30.02 Light maintenance facility					$ -	$ -	$ -	
30.03 Heavy maintenance facility					$ -	$ -	$ -	
30.04 Storage or maintenance-of-way building/bases					$ -	$ -	$ -	
30.05 Yard and yard track					$ -	$ -	$ -	
40 SITEWORK, RIGHT OF WAY, LAND, EXISTING IMPROVEMENTS					$ 207,317	$ 20,732	$ 228,049	
40.01 Demolition, clearing, site preparation				$ 207,317	$ 207,317	$ 20,732	$ 228,049	
40.02 Site utilities, utility relocation					$ -	$ -	$ -	
40.03 Hazardous material, contaminated soil removal/mitigation, ground water treatments					$ -	$ -	$ -	
40.04 Environmental mitigation: wetlands, historic/archeology, parks					$ -	$ -	$ -	
40.05 Site structures including retaining walls, sound walls					$ -	$ -	$ -	
40.06 Temporary facilities and other indirect costs during construction					$ -	$ -	$ -	
40.07 Purchase or lease of real estate					$ -	$ -	$ -	
40.08 Highway/pedestrian overpass/grade separations					$ -	$ -	$ -	
40.09 Relocation of existing households and businesses					$ -	$ -	$ -	
50 COMMUNICATIONS & SIGNALING					$ -	$ -	$ -	
50.01 Wayside signaling equipment					$ -	$ -	$ -	
50.02 Signal power access and distribution					$ -	$ -	$ -	
50.03 On-board signaling equipment					$ -	$ -	$ -	
50.04 Traffic control and dispatching systems					$ -	$ -	$ -	
50.05 Communications					$ -	$ -	$ -	
50.06 Grade crossing protection					$ -	$ -	$ -	
50.07 Hazard detectors (dragging equipment, , slide, etc.)					$ -	$ -	$ -	
50.08 Station train approach warning system					$ -	$ -	$ -	
60 ELECTRIC TRACTION					$ -	$ -	$ -	

Project Name:	CP Wadsworth Bridge Replacements

	APPLICANT INPUTS							
	Unit	Quantity	Unit Cost (Base Yr/FY 10)	Non-Unit Based Costs	Total Allocated Cost (Base Yr/FY10 Dollars)	Allocated Contingency (Base Yr/FY10 Dollars)	TOTAL COST (Base Yr/FY10 Dollars)	Explanation Provided? (if so use *)
60.01 Traction power transmission: High voltage					$ -	$ -	$ -	
60.02 Traction power supply: Substations	#				$ -	$ -	$ -	
60.03 Traction power distribution: Catenary and third rail	#				$ -	$ -	$ -	
60.04 Traction power control					$ -	$ -	$ -	
Construction Subtotal (10-60)					$ 6,405,130	$ 640,513	$ 7,045,643	

Project Name:	CP Wadsworth Bridge Replacements

	APPLICANT INPUTS							
	Unit	Quantity	Unit Cost (Base Yr/FY 10)	Non-Unit Based Costs	Total Allocated Cost (Base Yr/FY10 Dollars)	Allocated Contingency (Base Yr/FY10 Dollars)	TOTAL COST (Base Yr/FY10 Dollars)	Explanation Provided? (if so use *)
70 VEHICLES					$ -	$ -	$ -	
70.00 Vehicle acquisition: Electric locomotive	#				$ -	$ -	$ -	
70.01 Vehicle acquisition: Non-electric locomotive	#				$ -	$ -	$ -	
70.02 Vehicle acquisition: Electric multiple unit	#				$ -	$ -	$ -	
70.03 Vehicle acquisition: Diesel multiple unit	#				$ -	$ -	$ -	
70.04 Veh acq: Loco-hauled passenger cars w/ ticketed space	#				$ -	$ -	$ -	
70.05 Veh acq: Loco-hauled passenger cars w/o ticketed space	#				$ -	$ -	$ -	
70.06 Vehicle acquisition: Maintenance of way vehicles	#				$ -	$ -	$ -	
70.07 Vehicle acquisition: Non-railroad support vehicles	#				$ -	$ -	$ -	
70.08 Vehicle refurbishment: Electric locomotive	#				$ -	$ -	$ -	
70.09 Vehicle refurbishment: Non-electric locomotive	#				$ -	$ -	$ -	
70.10 Vehicle refurbishment: Electric multiple unit	#				$ -	$ -	$ -	
70.11 Vehicle refurbishment: Diesel multiple unit	#				$ -	$ -	$ -	
70.12 Veh refurb: Passeng. loco-hauled car w/ ticketed space	#				$ -	$ -	$ -	
70.13 Veh refurb: Non-passeng loco-hauled car w/o ticketed space	#				$ -	$ -	$ -	
70.14 Vehicle refurbishment: Maintenance of way vehicles	#				$ -	$ -	$ -	
70.15 Spare parts					$ -	$ -	$ -	
80 PROFESSIONAL SERVICES (applies to Cats. 10-60)					$ 210,870	$ 21,087	$ 231,957	
80.01 Service Development Plan/Service Environmental					$ -	$ -	$ -	
80.02 Preliminary Engineering/Project Environmental					$ -	$ -	$ -	
80.03 Final design				$ 88,850	$ 88,850	$ 8,885	$ 97,735	
80.04 Project management for design and construction					$ -	$ -	$ -	
80.05 Construction administration & management				$ 23,693	$ 23,693	$ 2,369	$ 26,062	
80.06 Professional liability and other non-construction insurance					$ -	$ -	$ -	
80.07 Legal; Permits; Review Fees by other agencies, cities, etc.					$ -	$ -	$ -	
80.08 Surveys, testing, investigation					$ -	$ -	$ -	
80.09 Engineering inspection				$ 98,327	$ 98,327	$ 9,833	$ 108,160	
80.10 Start up					$ -	$ -	$ -	
Subtotal (10-80)					**$ 6,616,000**	**$ 661,600**	**$ 7,277,600**	
90 UNALLOCATED CONTINGENCY								
Subtotal (10-90)							**$ 7,277,600**	
100 FINANCE CHARGES								
TOTAL CAPITAL COSTS (10-100)							**$ 7,277,600**	

Space provided for additional descriptions of capital costs.
See Example under "Instructions" above. Please include references to specific Cost Category numbers.

Annual Capital Cost Budget

Instructions:

This form provides a breakdown by year of the capital costs entered in the previous "Detailed Capital Cost Budget". The data you enter in this form should be drawn from budget estimates or analysis you have available for your project.

1. In the yellow cells in the "Base Year/ FY 2010 Dollars" table, enter the annual dollar figures for each cost category in Base Year/FY 2010 Dollars.

2. In the "Base Year/ FY 2010 Dollars" table, the numbers in the "Double Check Total" column will auto-populate from the "Detailed Capital Cost Budget" in the previous tab. The numbers in the "Base Yr/FY 10 Total" column will be the sum of the annual data entered to the left. The two columns should match for each Standard Cost Categpry. If the entries in the "Double Check Total" column are red, the Base Year/FY 10 values you entered in the previous tab do not match the values entered in this tab.

3. The light blue cells in the Year of Expenditure (YOE) table will auto-populate using Inflation rates from the "General Info" tab.

Project Name: CP Wadsworth Bridge Replacements

BASE YEAR/ FY 2010 DOLLARS	2010	2011	2012	2013	2014	2015	2016	Base Yr /FY 10 Total*	Double Check Total
10 TRACK STRUCTURES & TRACK		$ 6,817,594						$ 6,817,594	$ 6,817,594
20 STATIONS, TERMINALS, INTERMODAL								$ -	$ -
30 SUPPORT FACILITIES: YARDS, SHOPS, ADMIN. BLDGS								$ -	$ -
40 SITEWORK, RIGHT OF WAY, LAND, EXISTING IMPROVEMENTS		$ 228,049						$ 228,049	$ 228,049
50 COMMUNICATIONS & SIGNALING								$ -	$ -
60 ELECTRIC TRACTION								$ -	$ -
70 VEHICLES								$ -	$ -
80 PROFESSIONAL SERVICES (applies to Cats. 10-60)		$ 231,957						$ 231,957	$ 231,957
90 UNALLOCATED CONTINGENCY								$ -	$ -
100 FINANCE CHARGES								$ -	$ -
Total Project Cost (10-100)	**$ -**	**$ 7,277,600**	**$ -**	**$ -**	**$ -**	**$ -**	**$ -**	**$ 7,277,600**	**$ 7,277,600**

YEAR OF EXPENDITURE (YOE) DOLLARS	2010	2011	2012	2013	2014	2015	2016	YOE Total**
10 TRACK STRUCTURES & TRACK	$ -	$ 6,953,946	$ -	$ -	$ -	$ -	$ -	$ 6,953,946
20 STATIONS, TERMINALS, INTERMODAL	$ -	$ -	$ -	$ -	$ -	$ -	$ -	$ -
30 SUPPORT FACILITIES: YARDS, SHOPS, ADMIN. BLDGS	$ -	$ -	$ -	$ -	$ -	$ -	$ -	$ -
40 SITEWORK, RIGHT OF WAY, LAND, EXISTING IMPROVEMENTS	$ -	$ 232,610	$ -	$ -	$ -	$ -	$ -	$ 232,610
50 COMMUNICATIONS & SIGNALING	$ -	$ -	$ -	$ -	$ -	$ -	$ -	$ -
60 ELECTRIC TRACTION	$ -	$ -	$ -	$ -	$ -	$ -	$ -	$ -
70 VEHICLES	$ -	$ -	$ -	$ -	$ -	$ -	$ -	$ -
80 PROFESSIONAL SERVICES (applies to Cats. 10-60)	$ -	$ 236,596	$ -	$ -	$ -	$ -	$ -	$ 236,596
90 UNALLOCATED CONTINGENCY	$ -	$ -	$ -	$ -	$ -	$ -	$ -	$ -
100 FINANCE CHARGES	$ -	$ -	$ -	$ -	$ -	$ -	$ -	$ -
Total Project Cost (10-100)	**$ -**	**$ 7,423,152**	**$ -**	**$ -**	**$ -**	**$ -**	**$ -**	**$ 7,423,152**

* For the purpose of this application, base year dollars are considered FY 2010 dollars.

**Year-of-Expenditure(YOE) dollars are inflation-adjusted Base Year dollars. Applicants may determine their own inflation rate and enter it on the "General Info" tab. Applicants should also explain their proposed inflation assumptions (and methodology, if applicable) in the Application Form, Section A, Point of Contact and Project Information, Question (4).

Schedule - In Calendar Years

Instructions:

1. In the yellow cells below, enter the anticipated "Start Date" and "End Date" for each high level activity (e.g., Final Design, Construction, Service Ops).

2. Illustrate the anticipated timing and duration of each task item on the chart below. Shade the quarters or months for each corresponding year in which work will take place on a task. Shade all cells in the corresponding row in which activity will take place. Enter an 'X' in a cell to shade that cell.

3. Complete this process for all of the tasks, both high-level tasks (e.g., Final Design) and subtasks (e.g., Issue request for bids, make awards of FD contracts).

Project Name: CP Wadsworth Bridge Replacements

Years 2010 - 2013 by Month

Task	Start Date	End Date	2010 Jan	Feb	Mar	Apr	May	Jun	Jul	Aug	Sep	Oct	Nov	Dec
Final Design (FD)	01/01/11	03/31/11												
Issue requests for bids, make awards of FD contracts														
FD Drawings; and cost estimate, schedule refinement														
Issue requests for construction bids														
Submit request / receive FRA approval for construction														
Make awards of construction contracts														
Construction	04/01/11	11/30/11												
Construct infrastructure														
Acquire and test vehicles														
Service Ops - Closeout	10/01/11	02/29/12												
Service Operations														
Completion of project/program close-out, resolution of claims														

Task	2011 Jan	Feb	Mar	Apr	May	Jun	Jul	Aug	Sep	Oct	Nov	Dec
Final Design (FD)												
Issue requests for bids, make awards of FD contracts												
FD Drawings; and cost estimate, schedule refinement	X	X										
Issue requests for construction bids		X										
Submit request / receive FRA approval for construction		X	X									
Make awards of construction contracts			X									
Construction												
Construct infrastructure				X	X	X	X	X	X	X	X	
Acquire and test vehicles												
Service Ops - Closeout												
Service Operations										X	X	
Completion of project/program close-out, resolution of claims												X

Task	2012 Jan	Feb	Mar	Apr	May	Jun	Jul	Aug	Sep	Oct	Nov	Dec
Final Design (FD)												
Issue requests for bids, make awards of FD contracts												
FD Drawings; and cost estimate, schedule refinement												
Issue requests for construction bids												
Submit request / receive FRA approval for construction												
Make awards of construction contracts												
Construction												
Construct infrastructure												
Acquire and test vehicles												
Service Ops - Closeout												
Service Operations												
Completion of project/program close-out, resolution of claims	X	X										

Task	2013 Jan	Feb	Mar	Apr	May	Jun	Jul	Aug	Sep	Oct	Nov	Dec
Final Design (FD)												
Issue requests for bids, make awards of FD contracts												
FD Drawings; and cost estimate, schedule refinement												
Issue requests for construction bids												
Submit request / receive FRA approval for construction												
Make awards of construction contracts												
Construction												
Construct infrastructure												
Acquire and test vehicles												
Service Ops - Closeout												
Service Operations												
Completion of project/program close-out, resolution of claims												

Years 2014-2016 by Quarter

Task	2014 Q1	Q2	Q3	Q4	2015 Q1	Q2	Q3	Q4	2016 Q1	Q2	Q3	Q4
Final Design (FD)												
Issue requests for bids, make awards of FD contracts												
FD Drawings; and cost estimate, schedule refinement												
Issue requests for construction bids												
Submit request / receive FRA approval for construction												
Make awards of construction contracts												
Construction												
Construct infrastructure												
Acquire and test vehicles												
Service Ops - Closeout												
Service Operations												
Completion of project/program close-out, resolution of claims												

PRA Public Protection Statement: Public reporting burden for this information collection is estimated to average 32 hours per response, including the time for reviewing instructions, searching existing data sources, gathering and maintaining the data needed, and completing and reviewing the collection of information. According to the Paperwork Reduction Act of 1995, a federal agency may not conduct or sponsor, and a person is not required to respond to, nor shall a person be subject to a penalty for failure to comply with, a collection of information unless it displays a currently valid OMB control number. The valid OMB control number for this information collection is 2130-0583.

General Information

Please enter the required data into the yellow cells.
This information will auto-populate other areas of the HSIPR Project Budget and Schedule Form.

Project Name (*same as on Application Form*)	CP Wadsworth Bridge Replacements
Lead State or Organization	IL Department of Transportation
Point-of-Contact (POC) Name	George Weber, Bureau Chief, DOR
Date of Submission	05/17/10
Version of Submission	1

Please enter required Contingency and Inflation rates into the yellow cells.

Capital Cost Categories*	Contingency Rate Assumption (%)	Inflation Rate Assumption (%)
10 Track Structures and Track	10%	2%
20 Stations, Terminals, Intermodal		
30 Support Facilities: Yards, Shops, Admin. Bldgs		
40 Sitework, ROW, Land, Existing Improvements & Special Conditions	10%	2%
50 Communications & Signaling		
60 Electric Traction		
70 Vehicles		
80 Professional Services (applies to Cats. 10-60)	10%	2%
90 Unallocated Contingency		
100 Finance Charges		

* See "Capital Cost Info." for definitions and explanations of the Standard Capital Cost (SCC) Categories.

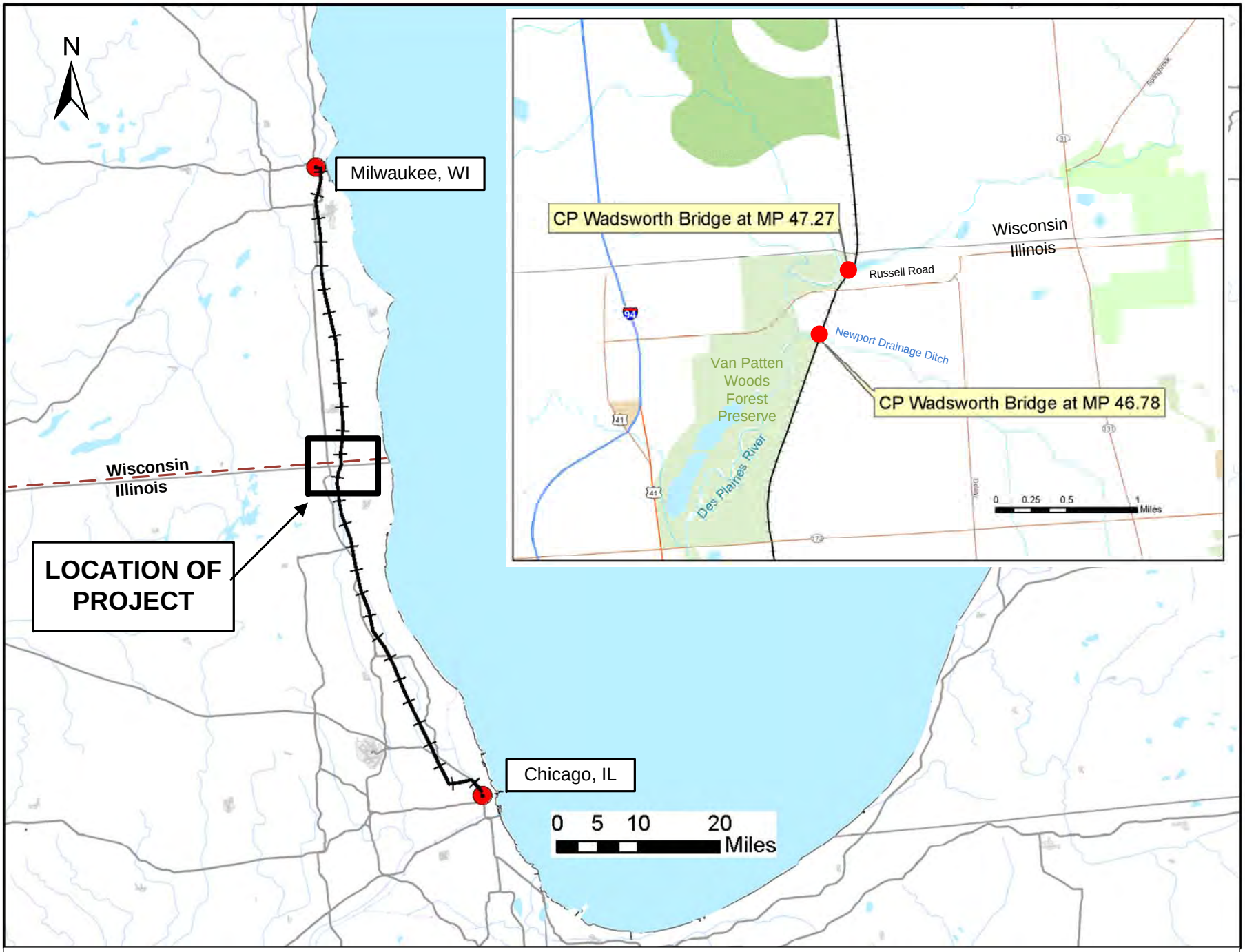

CP Wadsworth Bridge Replacements
Project Location Map

QUANDEL

OMB Approval No. 0348-0041

BUDGET INFORMATION - Construction Programs

NOTE: Certain Federal assistance programs require additional computations to arrive at the Federal share of project costs eligible for participation. If such is the case, you will be notified.

COST CLASSIFICATION	a. Total Cost	b. Costs Not Allowable for Participation	c. Total Allowable Costs (Columns a-b)
1. Administrative and legal expenses	$ .00	$ .00	$ .00
2. Land, structures, rights-of-way, appraisals, etc.	$ .00	$ .00	$ .00
3. Relocation expenses and payments	$ .00	$ .00	$ .00
4. Architectural and engineering fees	$ .00	$ .00	$ .00
5. Other architectural and engineering fees	$ .00	$ .00	$ .00
6. Project inspection fees	$ .00	$ .00	$ .00
7. Site work	$ .00	$ .00	$ .00
8. Demolition and removal	$ .00	$ .00	$ .00
9. Construction	$ .00	$ .00	$ .00
10. Equipment	$ .00	$ .00	$ .00
11. Miscellaneous	$ .00	$ .00	$ .00
12. SUBTOTAL *(sum of lines 1-11)*	$ .00	$ .00	$ .00
13. Contingencies	$ .00	$ .00	$ .00
14. SUBTOTAL	$ .00	$ .00	$ .00
15. Project (program) income	$ .00	$ .00	$ .00
16. TOTAL PROJECT COSTS *(subtract #15 from #14)*	$ .00	$ .00	$ .00
FEDERAL FUNDING			
17. Federal assistance requested, calculate as follows: (Consult Federal agency for Federal percentage share.) Enter the resulting Federal share.	Enter eligible costs from line 16c Multiply X _____%		$ .00

INSTRUCTIONS FOR THE SF-424C

Public reporting burden for this collection of information is estimated to average 180 minutes per response, including time for reviewing instructions, searching existing data sources, gathering and maintaining the data needed, and completing and reviewing the collection of information. Send comments regarding the burden estimate or any other aspect of this collection of information, including suggestions for reducing this burden, to the Office of Management and Budget, Paperwork Reduction Project (0348-0041), Washington, DC 20503.

PLEASE DO NOT RETURN YOUR COMPLETED FORM TO THE OFFICE OF MANAGEMENT AND BUDGET. SEND IT TO THE ADDRESS PROVIDED BY THE SPONSORING AGENCY.

This sheet is to be used for the following types of applications: (1) "New" (means a new [previously unfunded] assistance award); (2) "Continuation" (means funding in a succeeding budget period which stemmed from a prior agreement to fund); and (3) "Revised" (means any changes in the Federal Government's financial obligations or contingent liability from an existing obligation). If there is no change in the award amount, there is no need to complete this form. Certain Federal agencies may require only an explanatory letter to effect minor (no cost) changes. If you have questions, please contact the Federal agency.

Column a. - If this is an application for a "New" project, enter the total estimated cost of each of the items listed on lines 1 through 16 (as applicable) under "COST CLASSIFICATION."

If this application entails a change to an existing award, enter the eligible amounts *approved under the previous award* for the items under "COST CLASSIFICATION."

Column b. - If this is an application for a "New" project, enter that portion of the cost of each item in Column a. which is *not* allowable for Federal assistance. Contact the Federal agency for assistance in determining the allowability of specific costs.

If this application entails a change to an existing award, enter the adjustment [+ or (-)] to the previously approved costs (from column a.) reflected in this application.

Column. - This is the net of lines 1 through 16 in columns "a." and "b."

Line 1 - Enter estimated amounts needed to cover administrative expenses. Do not include costs which are related to the normal functions of government. Allowable legal costs are generally only those associated with the purchases of land which is allowable for Federal participation and certain services in support of construction of the project.

Line 2 - Enter estimated site and right(s)-of-way acquisition costs (this includes purchase, lease, and/or easements).

Line 3 - Enter estimated costs related to relocation advisory assistance, replacement housing, relocation payments to displaced persons and businesses, etc.

Line 4 - Enter estimated basic engineering fees related to construction (this includes start-up services and preparation of project performance work plan).

Line 5 - Enter estimated engineering costs, such as surveys, tests, soil borings, etc.

Line 6 - Enter estimated engineering inspection costs.

Line 7 - Enter estimated costs of site preparation and restoration which are not included in the basic construction contract.

Line 9 - Enter estimated cost of the construction contract.

Line 10 - Enter estimated cost of office, shop, laboratory, safety equipment, etc. to be used at the facility, if such costs are not included in the construction contract.

Line 11 - Enter estimated miscellaneous costs.

Line 12 - Total of items 1 through 11.

Line 13 - Enter estimated contingency costs. (Consult the Federal agency for the percentage of the estimated construction cost to use.)

Line 14 - Enter the total of lines 12 and 13.

Line 15 - Enter estimated program income to be earned during the grant period, e.g., salvaged materials, etc.

Line 16 - Subtract line 15 from line 14.

Line 17 - This block is for the computation of the Federal share. Multiply the total allowable project costs from line 16, column "c." by the Federal percentage share (this may be up to 100 percent; consult Federal agency for Federal percentage share) and enter the product on line 17.

OMB Approval No. 0348-0042

ASSURANCES - CONSTRUCTION PROGRAMS

Public reporting burden for this collection of information is estimated to average 15 minutes per response, including time for reviewing instructions, searching existing data sources, gathering and maintaining the data needed, and completing and reviewing the collection of information. Send comments regarding the burden estimate or any other aspect of this collection of information, including suggestions for reducing this burden, to the Office of Management and Budget, Paperwork Reduction Project (0348-0042), Washington, DC 20503.

PLEASE DO NOT RETURN YOUR COMPLETED FORM TO THE OFFICE OF MANAGEMENT AND BUDGET. SEND IT TO THE ADDRESS PROVIDED BY THE SPONSORING AGENCY.

NOTE: Certain of these assurances may not be applicable to your project or program. If you have questions, please contact the Awarding Agency. Further, certain Federal assistance awarding agencies may require applicants to certify to additional assurances. If such is the case, you will be notified.

As the duly authorized representative of the applicant, I certify that the applicant:

1. Has the legal authority to apply for Federal assistance, and the institutional, managerial and financial capability (including funds sufficient to pay the non-Federal share of project costs) to ensure proper planning, management and completion of the project described in this application.

2. Will give the awarding agency, the Comptroller General of the United States and, if appropriate, the State, through any authorized representative, access to and the right to examine all records, books, papers, or documents related to the assistance; and will establish a proper accounting system in accordance with generally accepted accounting standards or agency directives.

3. Will not dispose of, modify the use of, or change the terms of the real property title, or other interest in the site and facilities without permission and instructions from the awarding agency. Will record the Federal interest in the title of real property in accordance with awarding agency directives and will include a covenant in the title of real property aquired in whole or in part with Federal assistance funds to assure non-discrimination during the useful life of the project.

4. Will comply with the requirements of the assistance awarding agency with regard to the drafting, review and approval of construction plans and specifications.

5. Will provide and maintain competent and adequate engineering supervision at the construction site to ensure that the complete work conforms with the approved plans and specifications and will furnish progress reports and such other information as may be required by the assistance awarding agency or State.

6. Will initiate and complete the work within the applicable time frame after receipt of approval of the awarding agency.

7. Will establish safeguards to prohibit employees from using their positions for a purpose that constitutes or presents the appearance of personal or organizational conflict of interest, or personal gain.

8. Will comply with the Intergovernmental Personnel Act of 1970 (42 U.S.C. §§4728-4763) relating to prescribed standards for merit systems for programs funded under one of the 19 statutes or regulations specified in Appendix A of OPM's Standards for a Merit System of Personnel Administration (5 C.F.R. 900, Subpart F).

9. Will comply with the Lead-Based Paint Poisoning Prevention Act (42 U.S.C. §§4801 et seq.) which prohibits the use of lead-based paint in construction or rehabilitation of residence structures.

10. Will comply with all Federal statutes relating to non-discrimination. These include but are not limited to: (a) Title VI of the Civil Rights Act of 1964 (P.L. 88-352) which prohibits discrimination on the basis of race, color or national origin; (b) Title IX of the Education Amendments of 1972, as amended (20 U.S.C. §§1681-1683, and 1685-1686), which prohibits discrimination on the basis of sex; (c) Section 504 of the Rehabilitation Act of 1973, as amended (29 U.S.C. §794), which prohibits discrimination on the basis of handicaps; (d) the Age Discrimination Act of 1975, as amended (42 U.S.C. §§6101-6107), which prohibits discrimination on the basis of age; (e) the Drug Abuse Office and Treatment Act of 1972 (P.L. 92-255), as amended, relating to nondiscrimination on the basis of drug abuse; (f) the Comprehensive Alcohol Abuse and Alcoholism Prevention, Treatment and Rehabilitation Act of 1970 (P.L. 91-616), as amended, relating to nondiscrimination on the basis of alcohol abuse or alcoholism; (g) §§523 and 527 of the Public Health Service Act of 1912 (42 U.S.C. §§290 dd-3 and 290 ee-3), as amended, relating to confidentiality of alcohol and drug abuse patient records; (h) Title VIII of the Civil Rights Act of 1968 (42 U.S.C. §§3601 et seq.), as amended, relating to nondiscrimination in the sale, rental or financing of housing; (i) any other nondiscrimination provisions in the specific statute(s) under which application for Federal assistance is being made; and, (j) the requirements of any other nondiscrimination statute(s) which may apply to the application.

11. Will comply, or has already complied, with the requirements of Titles II and III of the Uniform Relocation Assistance and Real Property Acquisition Policies Act of 1970 (P.L. 91-646) which provide for fair and equitable treatment of persons displaced or whose property is acquired as a result of Federal and federally-assisted programs. These requirements apply to all interests in real property acquired for project purposes regardless of Federal participation in purchases.

12. Will comply with the provisions of the Hatch Act (5 U.S.C. §§1501-1508 and 7324-7328) which limit the political activities of employees whose principal employment activities are funded in whole or in part with Federal funds.

13. Will comply, as applicable, with the provisions of the Davis-Bacon Act (40 U.S.C. §§276a to 276a-7), the Copeland Act (40 U.S.C. §276c and 18 U.S.C. §874), and the Contract Work Hours and Safety Standards Act (40 U.S.C. §§327-333) regarding labor standards for federally-assisted construction subagreements.

14. Will comply with flood insurance purchase requirements of Section 102(a) of the Flood Disaster Protection Act of 1973 (P.L. 93-234) which requires recipients in a special flood hazard area to participate in the program and to purchase flood insurance if the total cost of insurable construction and acquisition is $10,000 or more.

15. Will comply with environmental standards which may be prescribed pursuant to the following: (a) institution of environmental quality control measures under the National Environmental Policy Act of 1969 (P.L. 91-190) and Executive Order (EO) 11514; (b) notification of violating facilities pursuant to EO 11738; (c) protection of wetlands pursuant to EO 11990; (d) evaluation of flood hazards in floodplains in accordance with EO 11988; (e) assurance of project consistency with the approved State management program developed under the Coastal Zone Management Act of 1972 (16 U.S.C. §§1451 et seq.); (f) conformity of Federal actions to State (Clean Air) Implementation Plans under Section 176(c) of the Clean Air Act of 1955, as amended (42 U.S.C. §§7401 et seq.); (g) protection of underground sources of drinking water under the Safe Drinking Water Act of 1974, as amended (P.L. 93-523); and, (h) protection of endangered species under the Endangered Species Act of 1973, as amended (P.L. 93-205).

16. Will comply with the Wild and Scenic Rivers Act of 1968 (16 U.S.C. §§1271 et seq.) related to protecting components or potential components of the national wild and scenic rivers system.

17. Will assist the awarding agency in assuring compliance with Section 106 of the National Historic Preservation Act of 1966, as amended (16 U.S.C. §470), EO 11593 (identification and protection of historic properties), and the Archaeological and Historic Preservation Act of 1974 (16 U.S.C. §§469a-1 et seq.).

18. Will cause to be performed the required financial and compliance audits in accordance with the Single Audit Act Amendments of 1996 and OMB Circular No. A-133, "Audits of States, Local Governments, and Non-Profit Organizations."

19. Will comply with all applicable requirements of all other Federal laws, executive orders, regulations, and policies governing this program.

SIGNATURE OF AUTHORIZED CERTIFYING OFFICIAL	TITLE

APPLICANT ORGANIZATION	DATE SUBMITTED

OMB Approval No. 4040-0008
Expiration Date 07/30/2010

BUDGET INFORMATION - Construction Programs

NOTE: Certain Federal assistance programs require additional computations to arrive at the Federal share of project costs eligible for participation. If such is the case, you will be notified.

COST CLASSIFICATION	a. Total Cost	b. Costs Not Allowable for Participation	c. Total Allowable Costs (Columns a-b)
1. Administrative and legal expenses	$	$	$ 0.00
2. Land, structures, rights-of-way, appraisals, etc.	$	$	$ 0.00
3. Relocation expenses and payments	$ 24,167.00	$	$ 24,167.00
4. Architectual and engineering fees	$ 90,627.00	$	$ 90,627.00
5. Other architectural and engineering fees	$	$	$ 0.00
6. Project inspection fees	$ 100,293.00	$	$ 100,293.00
7. Site work	$	$	$ 0.00
8. Demolition and removal	$ 211,463.00	$	$ 211,463.00
9. Construction	$ 1,327,870.00	$	$ 1,327,870.00
10. Equipment	$ 51,960.00	$	$ 51,960.00
11. Miscellaneous	$ 4,941,940.00	$	$ 4,941,940.00
12. SUBTOTAL *(sum of lines 1-11)*	$ 6,748,320.00	$ 0.00	$ 6,748,320.00
13. Contingencies	$ 674,832.00	$	$ 674,832.00
14. SUBTOTAL	$ 7,423,152.00	$ 0.00	$ 7,423,152.00
15. Project (program) income	$	$	$ 0.00
16. TOTAL PROJECT COSTS *(subtract #15 from #14)*	$ 7,423,152.00	$ 0.00	$ 7,423,152.00

FEDERAL FUNDING

17. Federal assistance requested, calculate as follows: (Consult Federal agency for Federal percentage share.) Enter the resulting Federal share.	Enter eligible costs from line 16c Multiply X 50 %	$ 3,711,576.00

Please wait...

If this message is not eventually replaced by the proper contents of the document, your PDF viewer may not be able to display this type of document.

You can upgrade to the latest version of Adobe Reader for Windows®, Mac, or Linux® by visiting http://www.adobe.com/products/acrobat/readstep2.html.

For more assistance with Adobe Reader visit http://www.adobe.com/support/products/acrreader.html.

Windows is either a registered trademark or a trademark of Microsoft Corporation in the United States and/or other countries. Mac is a trademark of Apple Inc., registered in the United States and other countries. Linux is the registered trademark of Linus Torvalds in the U.S. and other countries.