	ISIS	MMIS
RESPONSIBLE FOR UPDATE	**District Local Roads**	**District Maintenance/Operations**
STRUCTURES	**Local**	**State**
UPDATE SCREENS	**(12) Inspection/Appraisals**	**(2) Inspection**
INQUIRY SCREENS	**(4) Inspection/Appraisals**	**(2) Inspection**

DESCRIPTION AND PURPOSE OF ITEM

This is a traffic safety feature item. The bridge rail is to be appraised to evaluate its adequacy in relation to current standards for the highway facility carried by the structure.

Factors that affect the proper functioning of bridge railings are material, strength and geometric features. Railings should be capable of retaining and smoothly redirecting an errant vehicle. Bridge railings that have been successfully crash tested for the speed limit of the highway being served are always considered as adequate. The standards for crash testing are published in the National Cooperative Highway Research Program (NCHRP) Report 350 published by the Transportation Research Board (TRB).

Crash tested rails are required for all bridges on designated NHS routes as indicated by Item 104 – National Highway System. They are also required on non-NHS routes except in the following cases:

- Bridges with current ADT (Item 29) less than 1,000 vehicles per day.
- Bridges in urban areas where the regulatory speed limit is less than 40 mph and the roadway cross-section is a curb and gutter design ("curb and gutter design" is described as a bridge with raised sidewalks or having a non-mountable curb between the roadway and the bridge rail).

When a crash tested bridge rail is not required, it must meet the requirements of the current AASHTO Standard Specifications for Highway Bridges. All standard bridge railings currently detailed in the IDOT Bridge Manual conform at least to the AASHTO Standard Specifications.

The following table provides the applicable criteria for appraising a crash tested rail with regard to the speed limit of the facility being served.

Crash Testing Criteria	
Crash Testing Level	Maximum Speed
TL1	30 mph
TL2	40 mph
TL3 – TL6	65 mph

Diagrams of various rails in common usage in Illinois, including all currently standard rails, are provided on pages following.

History is retained for this item based on each Inspection Date - Item 90.

DESCRIPTION AND PURPOSE OF ITEM

A one-digit code.

Enter the code in the first of a four-digit field on the update screens provided for "Railing Appraisal."

Code	Description
N	Not applicable/or safety feature not required
1	No bridge railing
2	Bridge railing does not meet currently acceptable standards
3	Bridge railing meets currently acceptable standards

EXAMPLES:

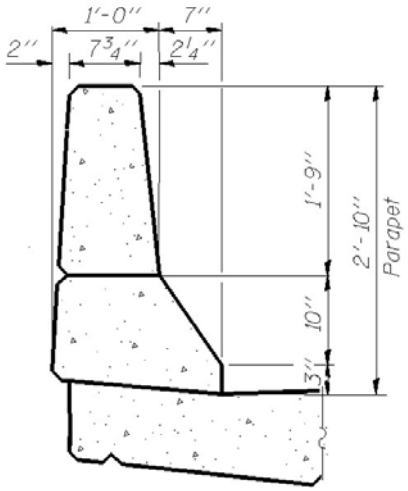

"New Jersey" Parapet
Item 36A = 3; Item 516 = 57
Crash Test: TL4

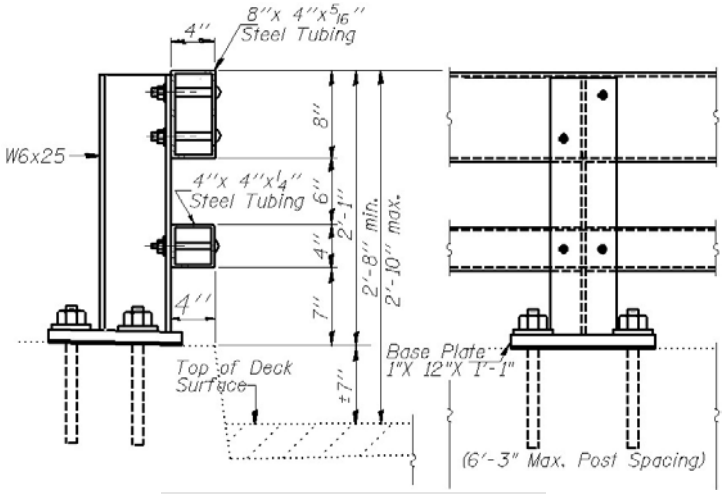

Curb Mounted Steel
Retrofit Rail, "2399" (Std. R-31)
Item 36A = 3; Item 516 = 27
Crash Test: TL4

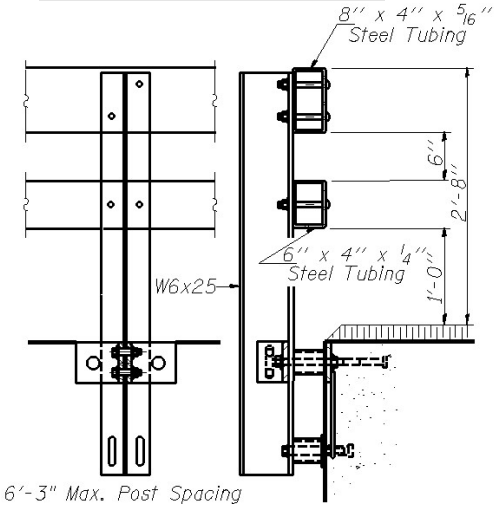

Type "SM" Steel Rail (Std R-34)
Item 36A = 3; Item 516 = 51
Crash Test: TL4

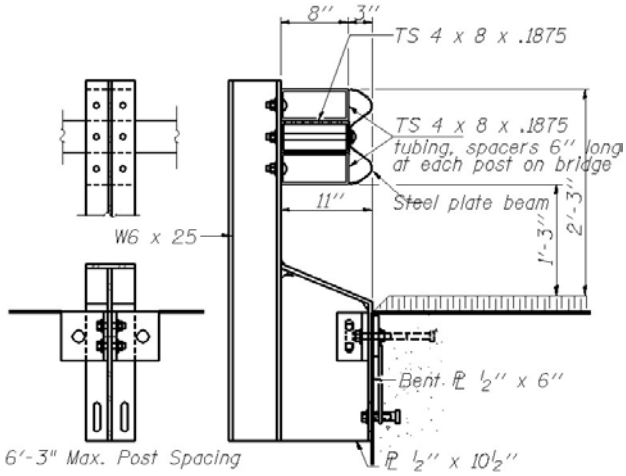

Type WT Steel Rail (Std. R-30)
Item 36A = 3; Item 516 = 55
Crash Test: TL4

EXAMPLES:

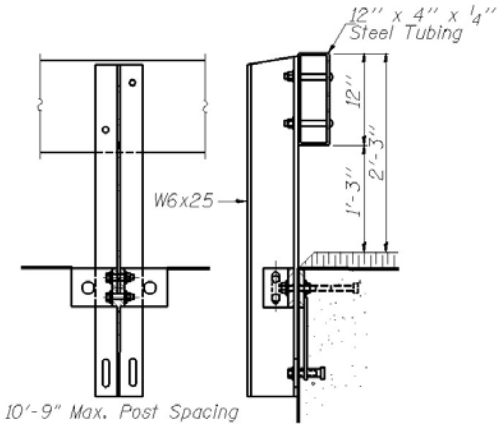

Type "S-1" Steel Rail (Std. R-23A)
Item 36A*; Item 516 = 50
Not crash tested

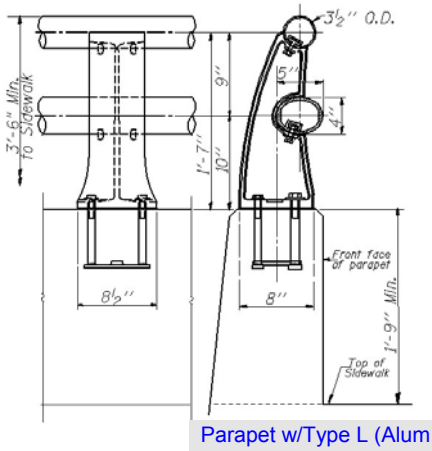

Parapet w/Type L (Alum.) or M (Steel)
Combination Rail (Std. R-20)
Item 36A *; Item 516: L – 05; M - 30
Not Crash Tested

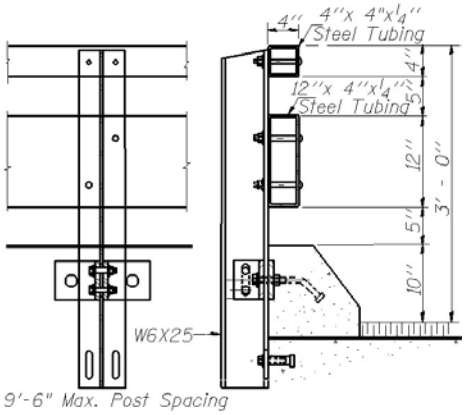

Type "T-1" Steel Rail (Std. R-24A)
Item 36A*; Item 516 = 53
Not crash tested

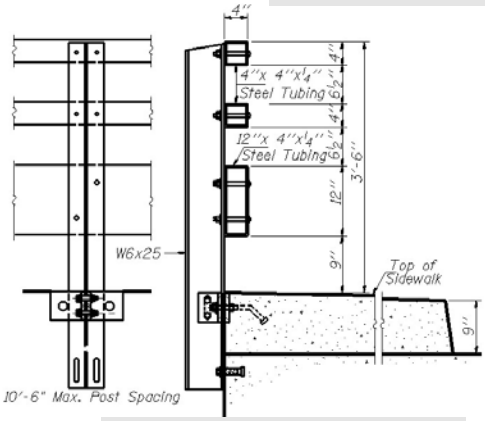

Type "TP-1" Steel Rail (Std R-26)
Item 36A*; Item 516 = 54
Not crash tested

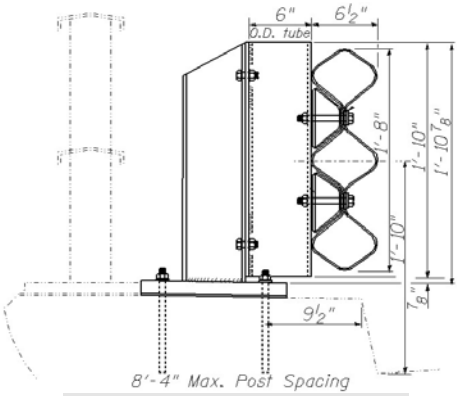

Tubular Thrie Retrofit Rail
Item 36A*; Item 516 = 43
Crash Test: TL3

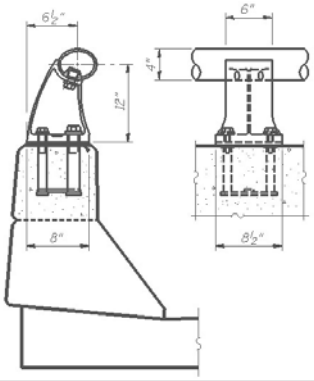

Alum Oval on GM Parapet (Std. R-17&17A)
Item 36A*; Item 516 = 08
Not crash tested

* *Code Item 36A as "2" for bridges where current design specifications require a crash tested rail. Code as "3" when crash tested rail is not required. (See "Description and Purpose of Item".)*

EXAMPLES:

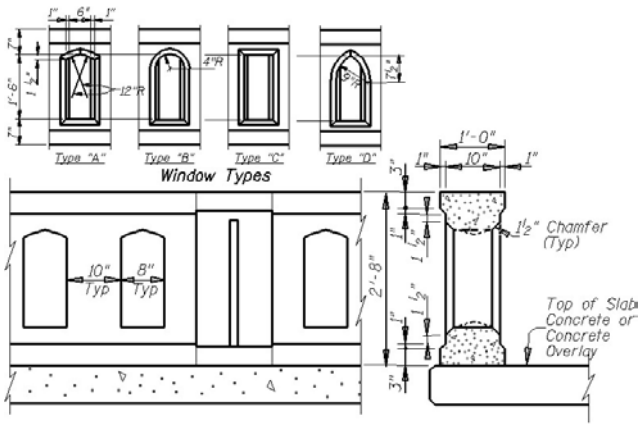

Texas Classic Type 411
Concrete Traffic Rail
Item 36A = 3; Item 516 = 72
Crash Test: TL2

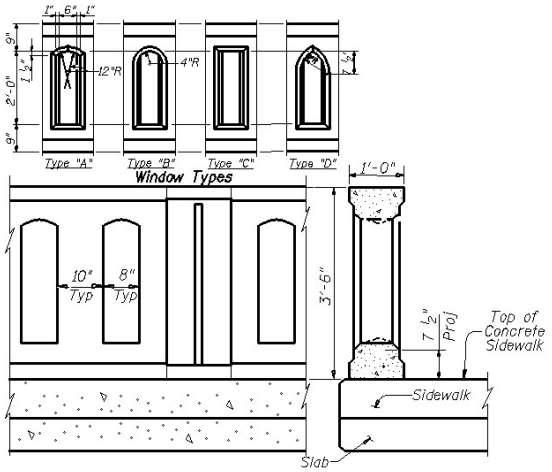

Texas Classic Type C411
Concrete Combination Rail
Item 36A = 3; Item 516 = 73
Crash Test: TL2

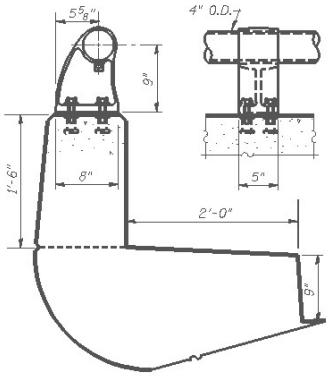

Alum / Steel Pipe on Concr Parapet
(Std. R -10 / 14)
Item 36A = 2; Item 516 = 01 / 19

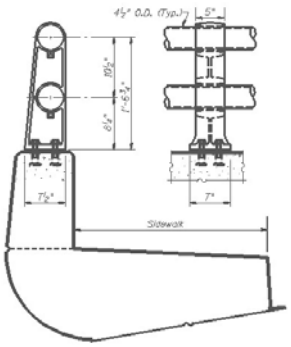

2 Alum / Steel Pipes on Concr
Parapet w/Sidewalk (Std. R -11 / 16)
Item 36A = 2; Item 516 = 02 / 20

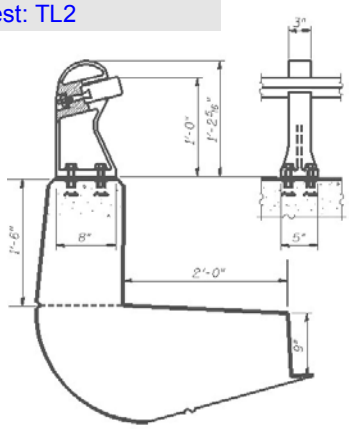

Steel Tube on Concr Parapet
(Std. R -15)
Item 36A = 2; Item 516 = 28

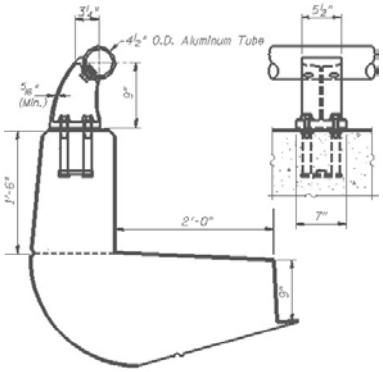

Alum Pipe on Concr Parapet
(Std. R -19)
Item 36A = 2; Item 516 = 01

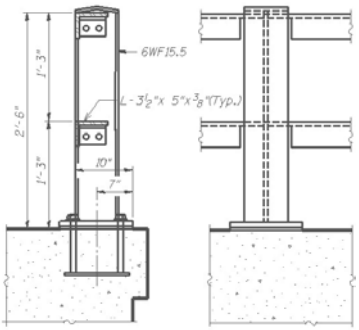

2 Steel Angles
(Std. R -1&5)
Item 36A = 2; Item 516 = 44

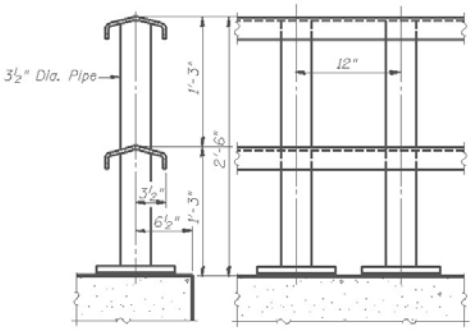

2 Steel Channels on Pipe-Post
(Std. R-2,6&12)
Item 36A = 2; Item 516 = 33

EXAMPLES:

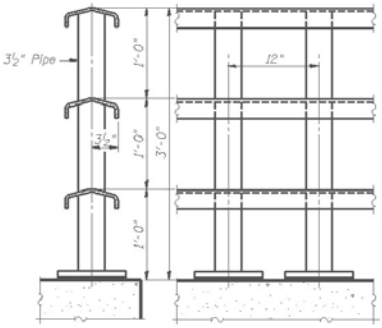

3 Steel Channels on Pipe-Post
(Std. R-3,7&13)
Item 36A = 2; Item 516 = 35

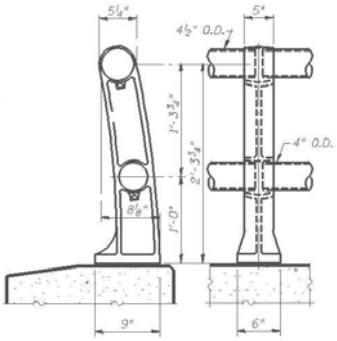

2 Aluminum Pipes
(Std. R-4 & 8)
Item 36A = 2; Item 516 = 06

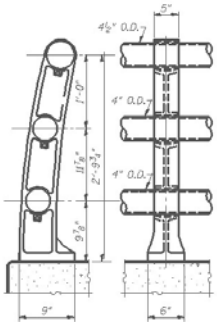

3 Aluminum Pipes
(Std. R-9)
Item 36A = 2; Item 516 = 03

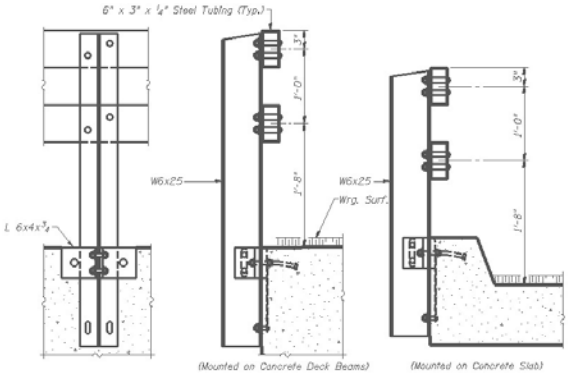

2 Steel Rect. Tubes on Side-mounted
I-Post, Type "N" (Std. R-22)
Item 36A*; Item 516 = 29

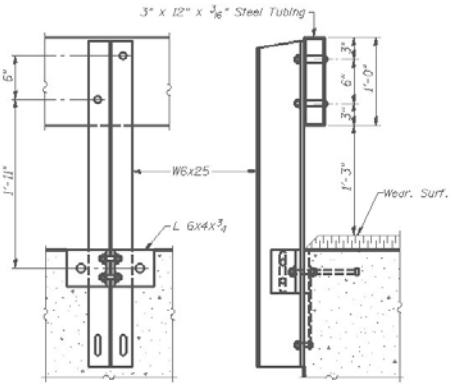

1 Steel Rect. Tubes on Side-mounted
I-Post, Type "S" (Std. R-23)
Item 36A*; Item 516 = 49

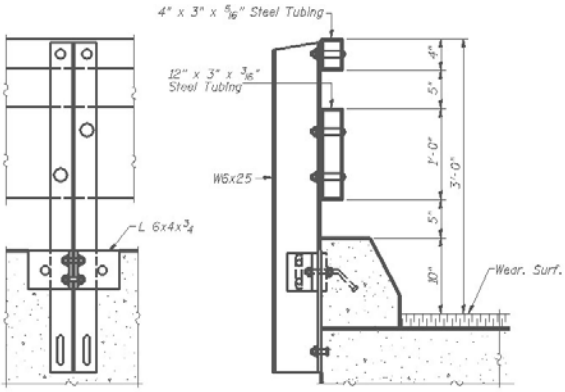

2 Steel Rect. Tubes (12X3-B., 4X3-T.) on
Side-mounted I-Post, Type "T" (Std. R-24)
Item 36A*; Item 516 = 29

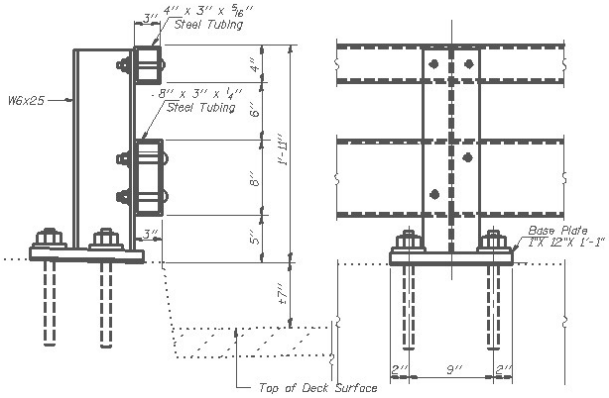

Curb Mounted Steel
Retrofit Rail, (BDE Std. 2399)
Item 36A*; Item 516 = 26
Not Crash Tested

* *Code Item 36A as "2" for bridges where current design specifications require a crash tested rail. Code as "3" when crash tested rail is not required. (See "Description and Purpose of Item".)*