STATE OF ILLINOIS
DEPARTMENT OF TRANSPORTATION
DIVISION OF HIGHWAYS

PLANS FOR PROPOSED FEDERAL AID HIGHWAY

F.A. RTE. 840 (ILL. RTE. 50)
SECTION 140 W&RS-5
KANKAKEE COUNTY
C-93-031-88

F.A.P. RTE 840 (ILL. RTE. 50) SECTION 140 W&RS-5 KANKAKEE '84

P-93-026-84

INDEX OF SHEETS

PAGE NO.	TITLE
1	COVER SHEET
2- 7	TYPICAL SECTIONS
8	SUMMARY OF QUANTITIES
9	SUMMARY OF QUANTITIES AND GENERAL NOTES
10-14	SCHEDULES OF QUANTITIES
15-23	STORM SEWER SCHEDULE
24-41	PLAN AND PROFILE
42-48	GEOMETRICS
49	LAYOT INFORMATION
50-51	PROPOSED INTERSECTION GRADES
52-69	DRAINAGE AND STORM SEWER
70-79	PAVEMENT MARKING DETAILS
80	TIE POINTS
81-82	WATERMAIN DETAILS
83	FIELD TILE DETAILS
84	CATCH BASIN, TYPE C WITH STD. 2250 INLET
85	GRATING FOR CONCRETE FLARED END SECTION (24" & 48" ELLIPTICAL)
86	PCC DETAILS
87	BITUMINOUS TAPER DETAILS
88	MISCELLANEOUS DETAILS
89-90	INSTALLATION OF INDUCTION LOOP DETECTOR SYSTEM FOR TRAFFIC DATA COLLECTION
91	GUARD RAIL DETAILS
92	TYPICAL PAVEMENT MARKINGS
93	THERMOPLASTEC PAVEMENT MARKING DETAILS
94	RAISED REFLECTIVE PAVEMENT MARKERS
95-96	TRAFFEC SIGNAL DETAILS
97-134	CROSS SECTIONS

STANDARDS

1526-7	VALVE VAULT, TYPE A
1527-9	MANHOLE, TYPE A
1530-5	CATCH BASIN, TYPE C
1603-4	INLET, TYPE A
1606-4	SYMBOLES AND ABBREVIATIONS
1744-4	RIGHT-OF-WAY MARKERS
2117-1	PATCHING DETAILS (BITUMINOUS)
2130-9	CONCRETE CURB AND COMBINATION CONCRETE CURB AND GUTTER
2135	PERMANENT SURVEY MARKERS
2143-3	WIDTH TRANSITION
2168-11	CHAIN LINK FENCE
2213-4	FRAME AND LIDS, TYPE 1
2214-4	FRAME AND GRATES, TYPE 3
2217-3	GRATES, TYPE 8
2220-3	FRAME AND GRATES, TYPE 11
2230-14	STEEL PLATE BEAM GUARD RAIL
2237-10	SHOULDER DETAILS-SHOULDER WITH B.A.M. STABILIZATION
2262-4	REINFORCED CONCRETE PIPE ELBOW AND PRECAST REINFORCED CONCRETE FLARED END SECTION
2263-3	REINFORCED CONCRETE PIPE TEE
2298-7	TYPICAL APPLICATION OF TRAFFIC CONTROL DEVICES
2299-10	DESIGN OF TRAFFIC CONTROL DEVICES
2300-3	FLAGMAN TRAFFIC CONTROL SIGN
2301-5	TYPICAL APPLICATION OF TRAFFIC CONTROL DEVICES
2302-5	TYPICAL APPLICATION OF TRAFFIC CONTROL DEVICES
2303-6	TYPICAL APPLICATION OF TRAFFIC CONTROL DEVICES
2306-6	TYPICAL APPLICATION OF TRAFFIC CONTROL DEVICES
2307-6	TYPICAL APPLICATION OF TRAFFIC CONTROL DEVICES
2308-4	TYPICAL APPLICATION OF TRAFFIC CONTROL DEVICES
2311-8	TYPICAL APPLICATION OF TRAFFIC CONTROL DEVICES
2313-5	TYPICAL APPLICATION OF TRAFFIC CONTROL DEVICES
2314-5	TYPICAL APPLICATION OF TRAFFIC CONTROL DEVICES
2316-10	TYPICAL APPLICATION OF TRAFFIC CONTROL DEVICES
2327-9	SUB-SURFACE DRAINS
2336-4	TRAFFIC BARRIER TERMINAL, TYPE 1 & 1A
2338-1	TRAFFIC BARRIER TERMINAL, TYPE 3 & 3A
2344-1	TRAFFIC BARRIER TERMINAL, TYPE 7
2349	INLET, TYPE B
2354-1	PRECAST REINFORCED CONCRETE FLAT SLAB TOP
2364-1	GRATING FOR CONCRETE FLARED END SECTION (24", 30" & 36")
2369	DETAILS FOR CONCRETE AND MORTER MANHOLES
2369	DETAILS FOR DOUBLE HANDHOLES AND JUNCTION BOXES
2370-1	DETAILS OF DECTOR INSTALLATION
2371-1	DETAILS FOR MOUNTING TRAFFIC SIGNALS
2372	DETAILS OF SPAN WIRE MOUNTED SIGNALS AND FLASHING BEACON INSTALLATION
2373	DETAILS OF SERVICE INSTALLATIONS
2374-1	DETAILS OF STEEL MAST ARM ASSEMBLY AND POLE
2378-2	DETAILS OF CONCRETE FOUNDATIONS
2380-1	MAST ARM MOUNTED STREET NAME SIGNS
2393-1	STANDARD SEQUENCES FOR TRAFFIC ACTUATED CONTROLLERS
2394	TYPICAL LAYOUTS FOR DETECTOR LOOPS
2395	MANHOLE, TYPE A, 6 FOOT DIAMETER
2419	TYPICAL APPLICATIONS OF TRAFFIC CONTROL DEVICES

SCALE IN MILES

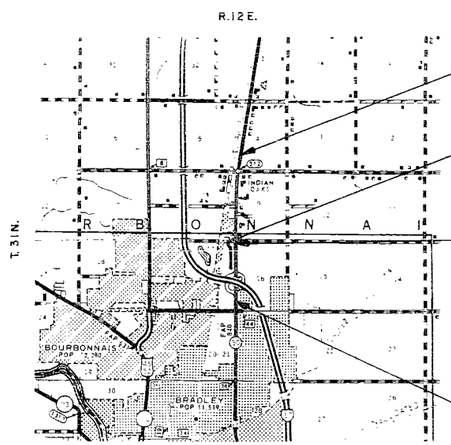

LOCATION MAP

END IMPROVEMENT
STATION 63+09.67

RELOCATED FRONTAGE ROAD INTERSECTION

STATION EQUATION:
STATION 1342+73.44 (BK.) =
STATION 2+75.24 (AH.)

BEGIN IMPROVEMENT
STATION 1294+50

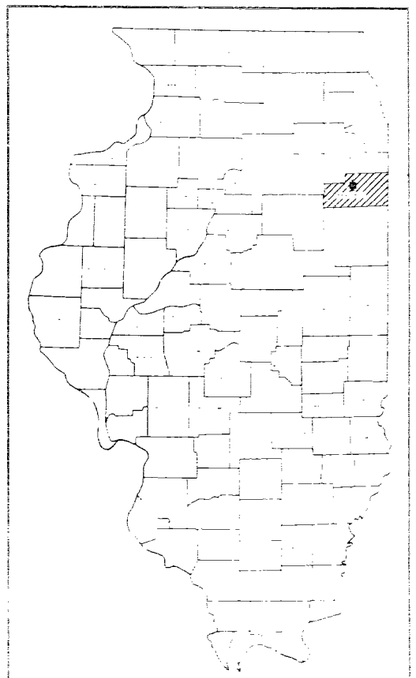

LOCATION OF SECTION INDICATED THUS: —

DESIGN DESIGNATION
F.A.I. 57 TO ROBERT HALL ROAD
1997 ADT (14,500) Area Service Extension
PC 94.7% SU 3.3% MU 2.0%
ROBERT HALL ROAD TO INDIAN OAKS ROAD
1997 ADT (9,500) Area Service Extension
~~PC 94.7% SU 3.3% MU 2.0%~~

STATE OF ILLINOIS
DEPARTMENT OF TRANSPORTATION
DIVISION OF HIGHWAYS

1/22 88
2/25 88
2/25 88
2/25 88

GROSS LENGTH = 10,857.85 FT. (2.056 MILES)
NET LENGTH = 10,857.85 FT. (2.056 MILES)

PROJECT ENGINEER : LYLE SCHAUB
SQUAD CHIEF..... : MARK YOUNG
TOWNSHIP..... : BOURBONNAIS
J.U.L.I.E. NUMBER.. : 1-800-892-0123

CONTRACT NO. 44055

F.A.P. RTE. 840 (ILL. RTE. 50) SECTION 140 W&RS-5, KANKAKEE COUNTY

ROUTE	SECTION	COUNTY	TOTAL SHEETS	SHEET NUMBER
FAI 520 (I-57)	140 W & 5 RS-5	KANKAKEE	134	2
F.A.I. REG. 4	ILLINOIS	PROJECT		

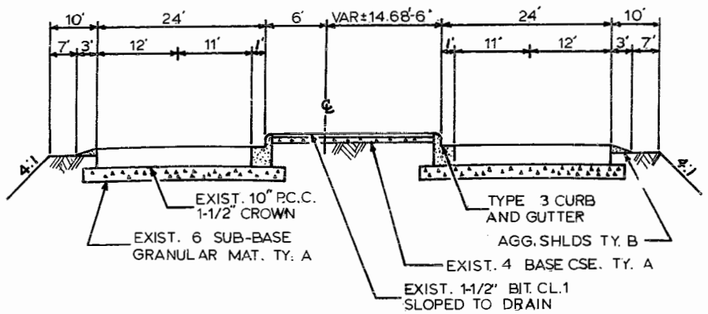

EXISTING TYPICAL SECTION

STA. 1294+50 - STA. 1298+60
STA. 1324+80 - STA. 1331+74.16

NOTE: TAPER SURF. CSE. TO 1" AT FACE OF CURB

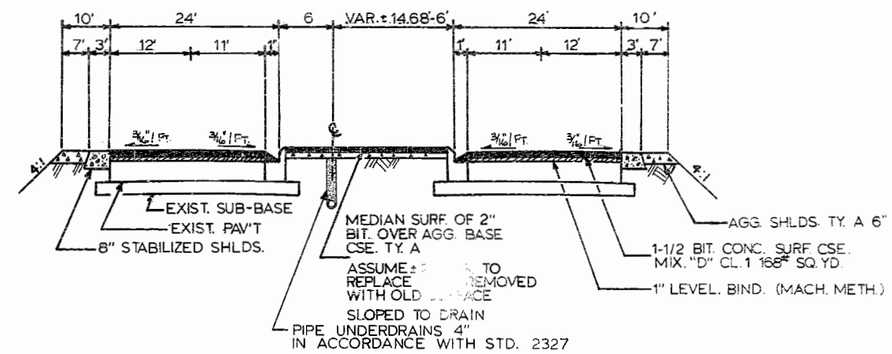

PROPOSED TYPICAL SECTION

STA. 1294+50 - STA. 1298+60
STA. 1324+80 - STA. 1331+74.16

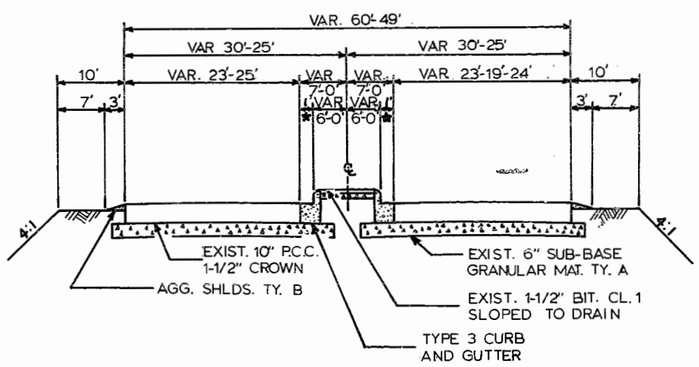

★ DIMINISHES TO 0' AT MEDIAN NOSE.

EXISTING TYPICAL SECTION

STA. 1331+74.16 - STA. 1337+20

NOTE: TAPER SURF. CSE. TO 1" AT FACE OF CURB

NOTE: STRIP REFLECTIVE CRACK CONTROL TREATMENT TO BE USED ALONG PROPOSED WIDENING

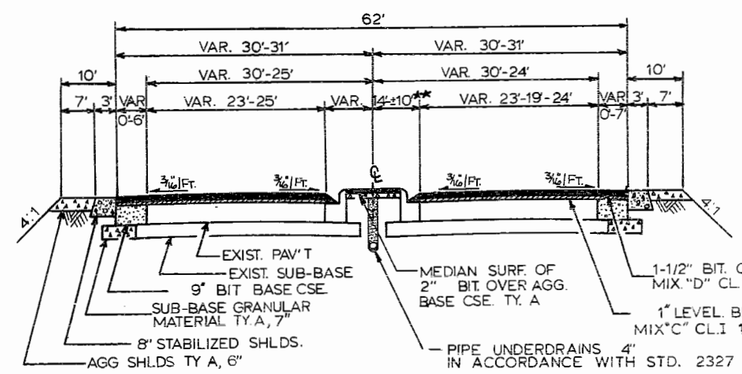

★★ BARRIER MEDIAN, CURB & GUTTER TO BE TERMINATED AT STA. 1337+20 AND REPLACED WITH RAMPED NOSE, 9" BIT. BASE CSE. & SUB-BASE GRANULAR MAT. TY. A 7" FROM THAT POINT NORTH

PROPOSED TYPICAL SECTION

STA. 1331+74.16 - STA. 1337+20

TYPICAL SECTIONS

ROUTE	SECTION	COUNTY	TOTAL SHEETS	SHEET NUMBER
FAP 820 (US 50)	2.9 Mi.	KANKAKEE	134	3
FHWA REG. 4	ILLINOIS	PROJECT		

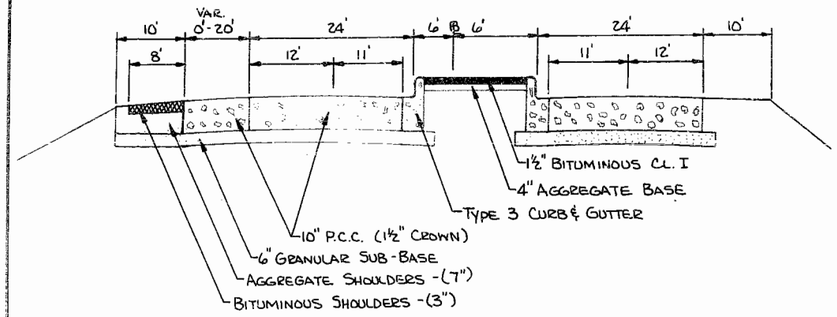

EXISTING TYPICAL SECTION

STA. 1298+60 - STA. 1300+70
STA. 1304+00 - STA. 1311+00
STA. 1315+80 - STA. 1318+80

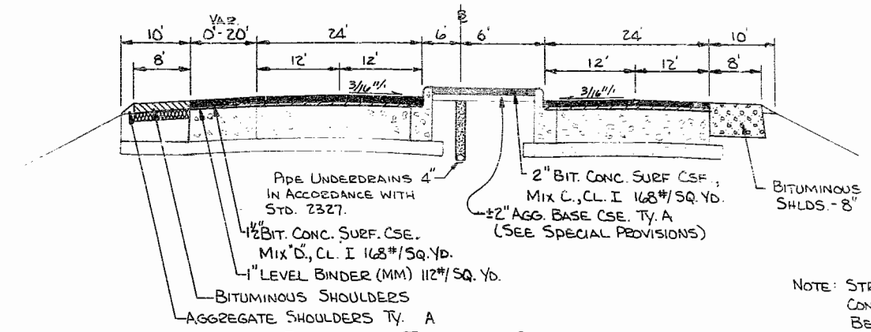

NOTE: STRIP REFLECTIVE CRACK CONTROL TREATMENT TO BE USED ALONG RAMP/EOP JOINT.

PROPOSED TYPICAL SECTION

STA. 1298+60 - STA. 1300+70
STA. 1304+00 - STA. 1311+00
STA. 1315+80 - STA. 1318+80

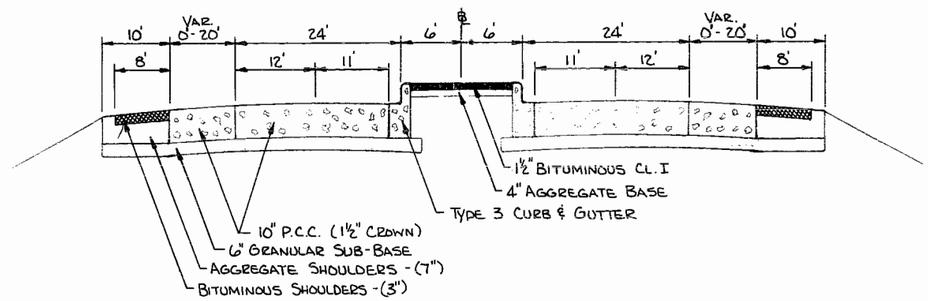

EXISTING TYPICAL SECTION

STA. 1300+70 - STA. 1304+00
STA. 1311+00 - STA. 1315+80
STA. 1318+80 - STA. 1319+60

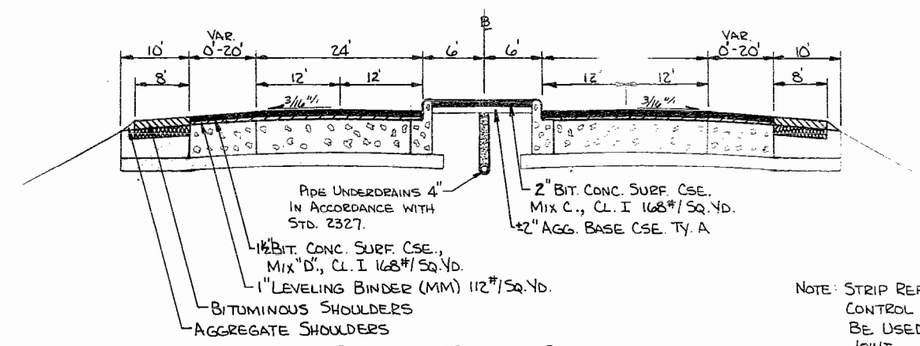

NOTE: STRIP REFLECTIVE CRACK CONTROL TREATMENT TO BE USED ALONG RAMP/EOP JOINT.

PROPOSED TYPICAL SECTION

STA. 1300+70 - STA. 1304+00
STA. 1311+00 - STA. 1315+80
STA. 1318+80 - STA. 1319+60

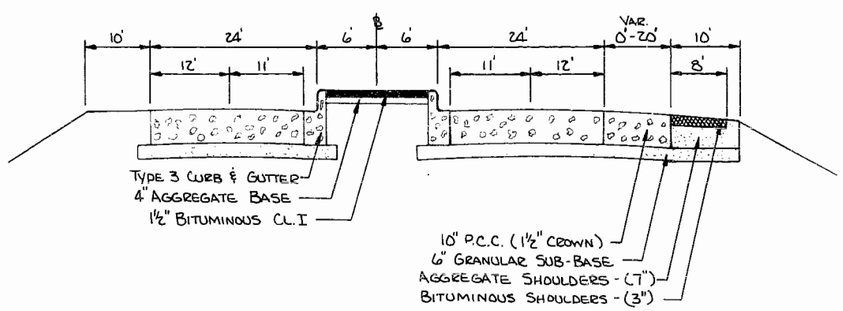

EXISTING TYPICAL SECTION

STA. 1319+60 - STA. 1324+80

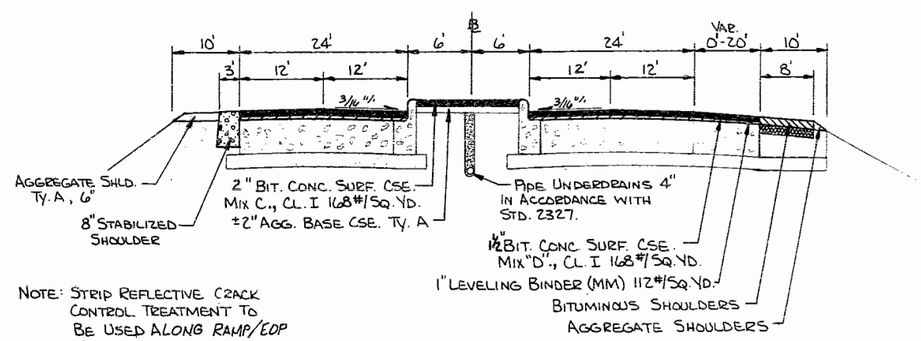

NOTE: STRIP REFLECTIVE CRACK CONTROL TREATMENT TO BE USED ALONG RAMP/EOP JOINT.

PROPOSED TYPICAL SECTION

STA. 1319+60 - STA. 1324+80

TYPICAL SECTIONS

ROUTE	SECTION	COUNTY	TOTAL SHEETS	SHEET NUMBER
FAP 820	(KOV) VILLAGE OF BOURBONNAIS	KANKAKEE	134	4
F.H.W.A. REG. 4	ILLINOIS	PROJECT		

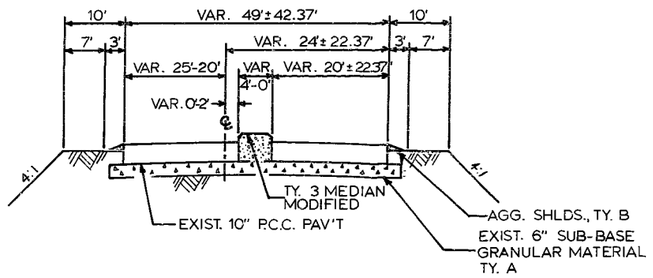

EXISTING TYPICAL SECTION

STA. 1337+20 - STA. 2+73.42 BK.
STA 1337+20 - STA. 2+95.48 AH.

NOTE: STRIP REFLECTIVE CRACK CONTROL TREATMENT TO BE USED ALONG PROPOSED WIDENING

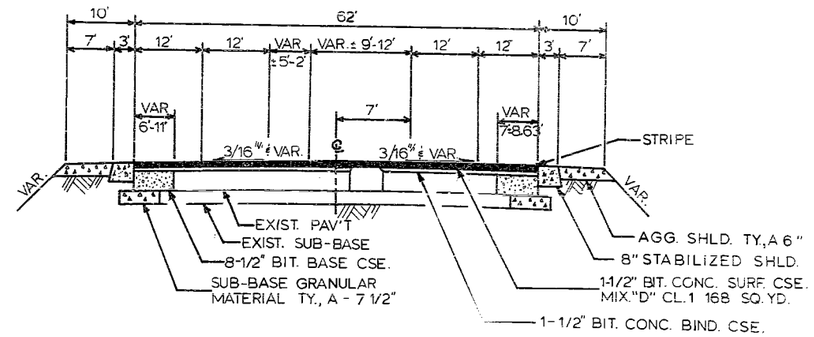

PROPOSED TYPICAL SECTION

STA. 1337+20 - STA. 1342+73.44 BK.
STA. 2+75.24(AH.) - STA. 2+95.48

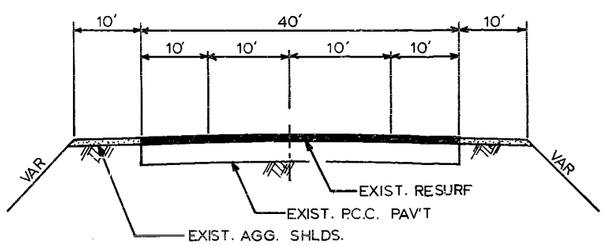

EXISTING TYPICAL SECTION

STA. 2+95.48 - STA. 53+80

NOTE: STRIP REFLECTIVE CRACK CONTROL TREATMENT TO BE USED ALONG PROPOSED WIDENING

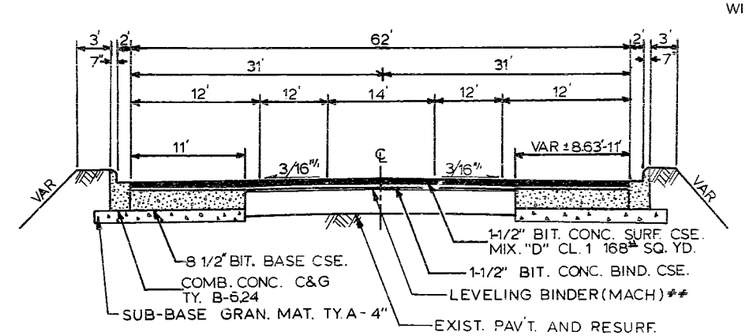

PROPOSED TYPICAL SECTION

STA. 2+95.48 - STA. 53+80

** STA 30+50 - STA 31+79
STA 33+85 - STA 36+19
STA 37+14 - STA 38+57
STA 41+23 - STA 53+95

TYPICAL SECTIONS

ROUTE	SECTION	COUNTY	TOTAL SHEETS	SHEET NUMBER
FAP 840 (US 52) / ILL 50	2 RS-5	KANKAKEE	134	5
F.H.W.A. REG. 4	ILLINOIS	PROJECT		

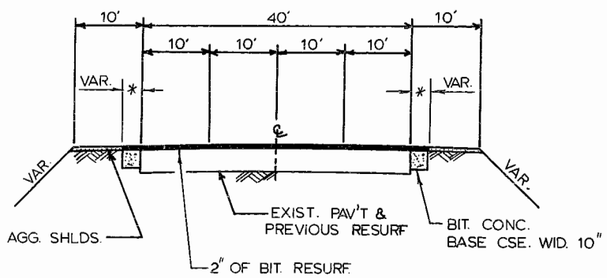

EXISTING TYPICAL SECTION

STA. 53+80 - STA. 56+40.95

* WIDENING VARIES FROM 1' AT STA 53+80 TO 3' AT STA 55+00

NOTE: STRIP REFLECTIVE CRACK CONTROL TREATMENT TO BE USED ALONG EXISTING AND PROPOSED WIDENING

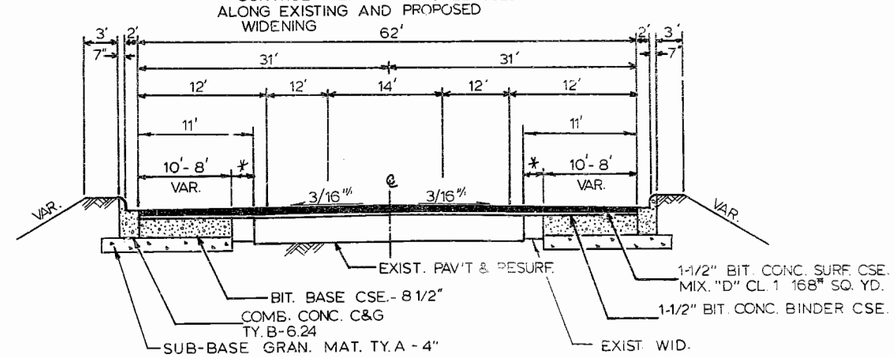

PROPOSED TYPICAL SECTION

STA. 53+80 - STA. 56+40.95

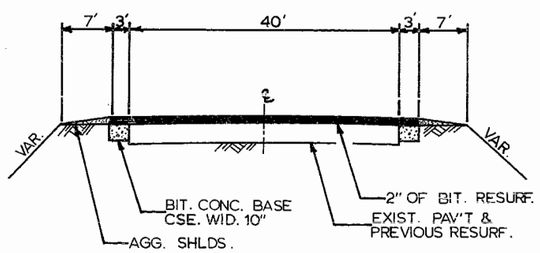

EXISTING TYPICAL SECTION

STA. 56+40.95 - STA. 57+99.70

NOTE: STRIP REFLECTIVE CRACK CONTROL TREATMENT TO BE USED ALONG EXISTING AND PROPOSED WIDENING

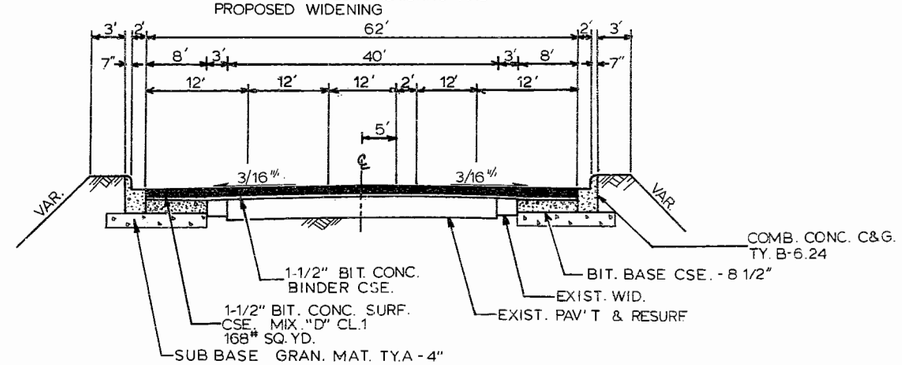

PROPOSED TYPICAL SECTION

STA. 56+40.95 - STA. 57+99.70

TYPICAL SECTIONS

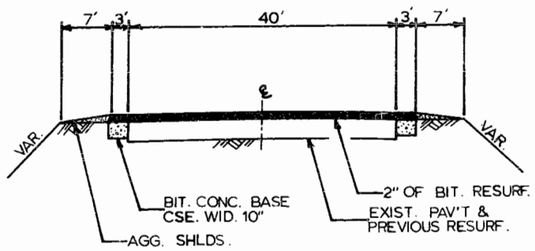

EXISTING TYPICAL SECTION

STA. 57+99.70 - STA. 59+49.70

NOTE: STRIP REFLECTIVE CRACK CONTROL TREATMENT TO BE USED ALONG EXISTING AND PROPOSED WIDENING

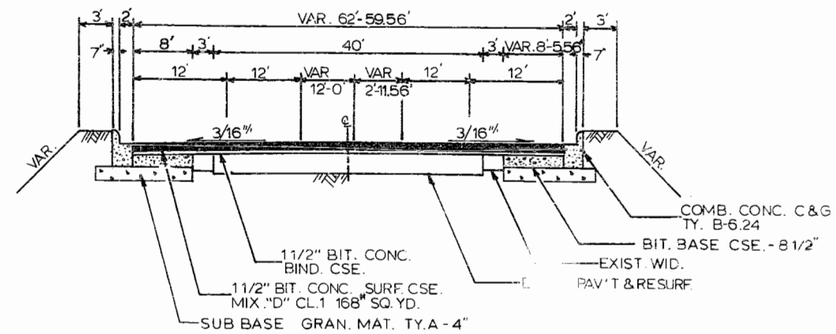

PROPOSED TYPICAL SECTION

STA. 57+99.70 - STA. 59+49.70

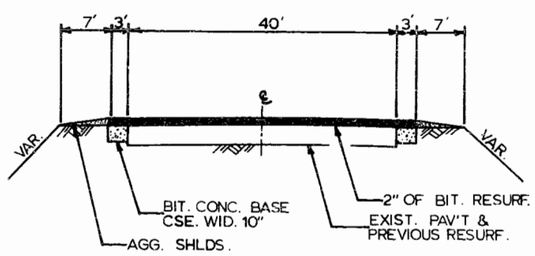

EXISTING TYPICAL SECTION

STA. 59+49.70 - STA. 62+29.70

NOTE: STRIP REFLECTIVE CRACK CONTROL TREATMENT TO BE USED ALONG EXISTING AND PROPOSED WIDENING

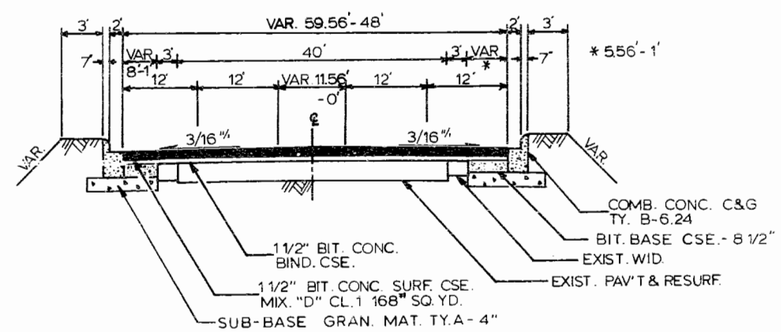

PROPOSED TYPICAL SECTION

STA. 59+49.70 - STA. 62+29.70

TYPICAL SECTIONS

ROUTE	SECTION	COUNTY	TOTAL SHEETS	SHEET NUMBER
FAP 540 (I-57)	14-2W & 2-2R	KANKAKEE	134	7

F.H.W.A. REG. 4 | FED. ROAD DIST. NO. 9 | ILLINOIS | PROJECT

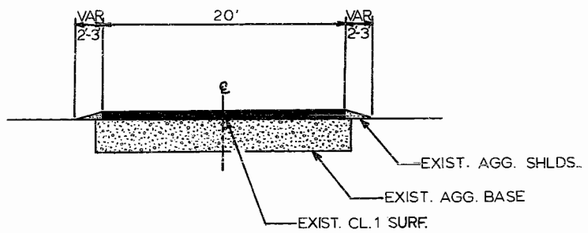

EXISTING TYPICAL SECTION

FRONTAGE ROAD

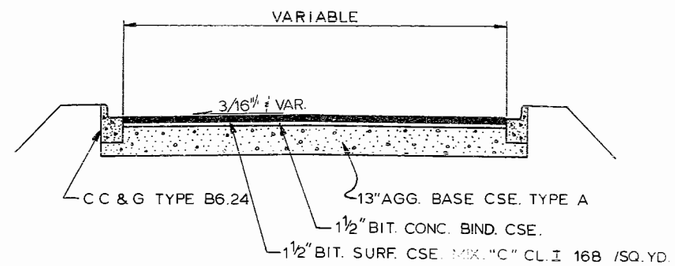

PROPOSED TYPICAL FOR RELOCATION

FRONTAGE ROAD
STA+200+16 - STA.200+92.32

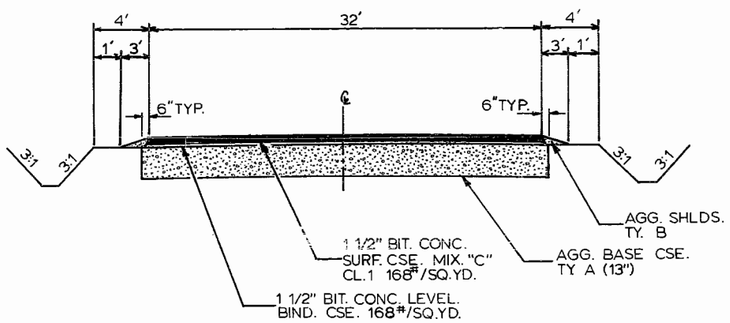

PROPOSED TYPICAL FOR RELOCATION

FRONTAGE ROAD
STA. 200+92.32 - STA. 201+95.00

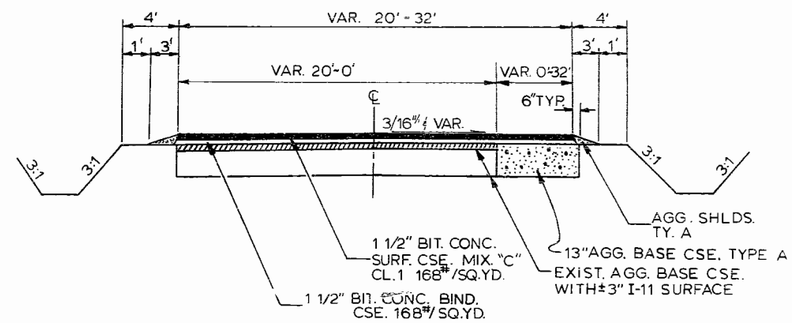

104 tons of LEVEL BINDER (MM) have been included in the plans to correct existing pavement slopes and build the proposed superelevation.

PROPOSED TYPICAL FOR WIDENING

FRONTAGE ROAD
STA. 201+95.00 - STA. 206+17

TYPICAL SECTIONS

RTE	SECTION	COUNTY	TOTAL SHEETS	SHEET NO.
FAP 340 (ILL 50)	140 W&RS-5	KANKAKEE	134	9
F.H.W.A. REG. 4	ILLINOIS	PROJECT		

SUMMARY OF QUANTITIES

CODE NO.	ITEM	UNIT	TOTAL QUANTITY	CONSTRUCTION TYPE CODE 1000-3A: URBAN ROAD 1294+50 to 30+00	CONSTRUCTION TYPE CODE 1000-3A: RURAL ROAD 30+00 to 63+09.67	CONSTRUCTION TYPE CODE SFTY1G: BRADLEY PARTICIPATION (50%)
20100100	TREE REMOVAL (6 TO 15 INCH DIAMETER)	IN DIA	56	56		
20100200	TREE REMOVAL (OVER 15 INCH DIAMETER)	IN DIA	458	146	312	
20200100	EARTH EXCAVATION	CU YD	7,852	5365	2487	
50200400	ROCK EXCAVATION FOR STRUCTURES	CU YD	20	10	10	
20200600	EXCAVATING AND GRADING EXISTING SHOULDER	UNIT	71	71		
21000100	TRENCH BACKFILL	CU YD	1,990.2	1301	689.2	
21300100	SUB-BASE GRANULAR MATERIAL, TYPE A	TON	4,833	2589	2244	
21500100	AGGREGATE SHOULDERS, TYPE A	TON	1,393	1357	36	
21600100	TOP SOIL EXCAVATION	CU YD	1,857	1109	748	
21600300	TOP SOIL PLACEMENT 4"	SQ YD	16,713	10,404	6309	
21900600	BITUMINOUS SHOULDERS 8"	SQ YD	2,653	2653		
21901000	BITUMINOUS SHOULDERS	TON	395	395		
22000100	EXPLORATION TRENCH 52" DEPTH	LIN FT	1,000	550	450	
22000300	EXPLORATION TRENCH 72" DEPTH	LIN FT	100	50	50	
30100100	AGGREGATE BASE COURSE, TYPE A	TON	1,046	1010	36	
30800510	BITUMINOUS BASE COURSE 8 1/2"	SQ YDS	13,999	6629	7370	
30800600	BITUMINOUS BASE COURSE 9"	SQ YDS	1,189	1189		
40200800	AGGREGATE SURFACE COURSE, TYPE B	TON	500	414	86	
40600100	BITUMINOUS MATERIALS (PRIME COAT)	GALLON	6,855	5007	1848	
40600300	AGGREGATE (PRIME COAT)	TON	166	135.1	30.9	
40600400	MIXTURE FOR CRACKS, JOINTS, AND FLANGEWAYS	TON	19	14.5	4.5	
40600500	LEVELING BINDER (MACHINE METHOD)	TON	2,706	1688	1018	
40600600	LEVELING BINDER (HAND METHOD)	TON	31	23.5	7.5	
40600700	BITUMINOUS CONCRETE BINDER COURSE	TON	4,372	2387	1985	
40601200	BITUMINOUS CONCRETE SURFACE COURSE, MIXTURE C; CLASS I	TON	526	437	89	
40601300	BITUMINOUS CONCRETE SURFACE COURSE, MIXTURE D; CLASS I	TON	5,987	4109	1878	
40601970	STRIP REFLECTIVE CRACK CONTROL TREATMENT, SYSTEM A	LIN FT	18,080	10,076	8,004	
50105200	REMOVE EXISTING CULVERTS	EACH	39	34	5	
50300200	CLASS X CONCRETE HEADWALLS	CU YD	5	2.7	2.3	
40801300	PROTECTIVE COAT	SQ YD	5,944	3269	2675	
50400800	CLASS X CONCRETE (OUTLETS)	CU YD	13.6	6.8	6.8	
51100439	PIPE CULVERTS, TYPE 1 RCCP 24"	LIN FT	76	76		
51107183	PIPE CULVERTS, TYPE 1, REINFORCED CONCRETE-ELIPTICAL, EQUIVALENT ROUND-SIZE 48"	LIN FT	74	74		
51113669	PRECAST REINFORCED CONCRETE FLARED END SECTIONS 24"	EACH	7	5	2	
51113681	PRECAST REINFORCED CONCRETE FLARED END SECTIONS 36"	EACH	1	1		
51114743	PRECAST REINFORCED CONCRETE FLARED END SECTIONS - ELLIPTICAL, EQUIVALENT ROUND SIZE 48"	EACH	2	2		
51116180	REINFORCED CONCRETE PIPE TEE, 12" PIPE WITH 12" RISER	EACH	1	1		
51116190	REINFORCED CONCRETE PIPE TEE, 18" PIPE WITH 12" RISER	EACH	4	2	2	
51116200	REINFORCED CONCRETE PIPE TEE, 24" PIPE WITH 12" RISER	EACH	1	1		
60100100	STONE RIPRAP	SQ YD	43	43		
60300300	STORM SEWERS, TYPE 1 8"	LIN FT	2		2	
60300500	STORM SEWERS, TYPE 1 12"	LIN FT	2,489	1675.5	813.5	
60300900	STORM SEWERS, TYPE 1 18"	LIN FT	1,885	575.2	1309.8	
60301200	STORM SEWERS, TYPE 1 24"	LIN FT	1,794	340.4	1453.6	
60301400	STORM SEWERS, TYPE 1 30"	LIN FT	131	131		
60301600	STORM SEWERS, TYPE 1 36"	LIN FT	243	243		
60334102	STORM SEWERS, TYPE 1 6" (FIELD TILE REPLACEMENT)	LIN FT	50	27.5	22.5	
60334103	STORM SEWERS, TYPE 1 8" (FIELD TILE REPLACEMENT)	LIN FT	50	27.5	22.5	
60334104	STORM SEWERS, TYPE 1 10" (FIELD TILE REPLACEMENT)	LIN FT	50	27.5	22.5	
60334105	STORM SEWERS, TYPE 1 12" (FIELD TILE REPLACEMENT)	LIN FT	50	27.5	22.5	
60334300 —	STORM SEWERS, TYPE 1, REINFORCED CONCRETE ELLIPTICAL PIPE, SPAN 30 RISE 19	LIN FT	290		290	
60334800	STORM SEWERS, TYPE 1, REINFORCED CONCRETE ELLIPTICAL PIPE, SPAN 60, RISE 38	LIN FT	305	305		
60340500	STORM SEWERS, SPECIAL 16"	LIN FT	429	256.7	172.3	
60344300	STORM SEWERS, RUBBER GASKET, TYPE 1 12"	LIN FT	37	37		
60344700	STORM SEWERS, RUBBER GASKET, TYPE 1 24"	LIN FT	240	160	80	
60344900	STORM SEWERS, RUBBER GASKET, TYPE 1 30"	LIN FT	45	45		
60700100	PIPE DRAINS 4"	LIN FT	50	27.5	22.5	
60700200	PIPE DRAINS 6"	LIN FT	50	27.5	22.5	
60700300	PIPE DRAINS 8"	LIN FT	50	27.5	22.5	
60700400	PIPE DRAINS 10"	LIN FT	50	27.5	22.5	
60700500	PIPE DRAINS 12"	LIN FT	50	27.5	22.5	
60707600	PIPE UNDERDRAINS 4"	LIN FT	3713	3713		
60708100	PIPE UNDERDRAINS 4" (SPECIAL)	LIN FT	77	77		
60903400	DUCTILE IRON WATER MAIN 16"	LIN FT	6,317	3186	3131	
60904900	WATER VALVES 6"	EACH	1	1		
60905300	WATER VALVES 16"	EACH	2	1	1	
61207600	CATCH BASINS, TYPE C, TYPE 8 GRATE	EACH	8	4	4	
61209000	CATCH BASINS, TYPE C, WITH MEDIAN INLET (2250)	EACH	12	11	1	

SUMMARY OF QUANTITIES

CODE NO.	ITEM	UNIT	TOTAL QUANTITY	CONSTRUCTION TYPE CODE 1000-3A: URBAN ROAD 1294+50 to 30+00	CONSTRUCTION TYPE CODE 1000-3A: RURAL ROAD 30+00 to 63+09.67	CONSTRUCTION TYPE CODE SFTY1G: BRADLEY PARTICIPATION (50%)
61218300	MANHOLES, TYPE A, 4'-DIAMETER, TYPE 1 FRAME, OPEN LID	EACH	3	3		
61218400	MANHOLES, TYPE A, 4'- DIAMETER, TYPE 1 FRAME, CLOSED LID	EACH	16	5	11	
61218500	MANHOLES, TYPE A, 4'-DIAMETER, TYPE 3 FRAME AND GRATE	EACH	1		1	
61218800	MANHOLES, TYPE A, 4' DIAMETER, TYPE 5 FRAME, CLOSED LID	EACH	1	1		
61221100	MANHOLES, TYPE A, 5'-DIAMETER, TYPE 1 FRAME, CLOSED LID	EACH	5		5	
61221500	MANHOLES, TYPE A, 5'-DIAMETER, TYPE 5 FRAME, CLOSED LID	EACH	4	3	1	
61223800	MANHOLES, TYPE A, 6'-DIAMETER, TYPE 1 FRAME, CLOSED LID	EACH	3	3		
61224000	MANHOLES, TYPE A, 6'-DIAMETER, TYPE 5 FRAME, CLOSED LID	EACH	3	3		
61235700	INLETS, TYPE A, TYPE 3 FRAME AND GRATE	EACH	39	16	23	
61240220	INLETS, TYPE B, TYPE 3 FRAME AND GRATE	EACH	30	17	13	
61248700	VALVE VAULTS, TYPE A, 4'-DIAMETER, TYPE 1 FRAME, CLOSED LID	EACH	2	1	1	
61249400	VALVE BOXES 6"	EACH	1	1		
61255500	MANHOLES TO BE ADJUSTED	EACH	1	1		
61255800	MANHOLES TO BE ADJUSTED WITH NEW TYPE 1 FRAME, CLOSED LID	EACH	1	1		
61262700	INLETS TO BE RECONSTRUCTED	EACH	2	2		
61404800	FRAMES AND GRATES, TYPE 11	EACH	20	20		
61406000	FRAMES AND LIDS, TYPE 1, OPEN LID	EACH	2	2		
61407910	GRATING FOR CONCRETE FLARED END SECTION 24"	EACH	7	5	2	
61407940	GRATING FOR CONCRETE FLARED END SECTION 36"	EACH	1	1		
61408540	GRATING FOR CONCRETE FLARED END SECTION EQUIVALENT ROUND SIZE 48"	EACH	2	2		
61500400	FILLING EXISTING VALVE VAULTS	EACH	1		1	
61600600	CONCRETE CURB, TYPE B	LIN FT	116		116	
61603400	GUTTER OUTLET (SPECIAL)	EACH	11		3	
61605000	COMBINATION CONCRETE CURB AND GUTTER, TYPE B-6.24	LIN FT	12,536	7223.2	5312.8	
61610400	COMBINATION CONCRETE CURB AND GUTTER, TYPE M-6.24	LIN FT	43	43		
61618300	CONCRETE MEDIAN SURFACE, 4 INCHES	SQ FT	1,256	69	1187	
61625900	PCC RAMP MEDIAN TERMINAL	EACH	1	1		
61700070	BITUMINOUS SURFACE REMOVAL (COLD MILLING), VARIABLE DEPTH	SQ YD	2,103	1849	254	
61700200	DRIVEWAY PAVEMENT REMOVAL	SQ YD	66		66	
61700500	COMBINATION CURB AND GUTTER REMOVAL	LIN FT	896	896		
61701700	COMBINATION CONCRETE CURB AND GUTTER REMOVAL AND REPLACEMENT	LIN FT	285	285		
61703100	MEDIAN REMOVAL	SQ FT	2,221	2221		
61703900	MEDIAN SURFACE REMOVAL AND REPLACEMENT	SQ FT	46,362	46,362		
62001900	PAVEMENT REMOVAL AND BITUMINOUS REPLACEMENT, TYPE I, 10 INCH	SQ YD	279	171.6	107.4	
62002000	PAVEMENT REMOVAL AND BITUMINOUS REPLACEMENT, TYPE II, 10 INCH	SQ YD	147	110.6	36.4	
62300200	PORTLAND CEMENT CONCRETE DRIVEWAY PAVEMENT, 6 INCH	SQ YD	108	108		
62300400	PORTLAND CEMENT CONCRETE DRIVEWAY PAVEMENT, 8 INCH	SQ YD	1,488	1214.3	273.7	
62800000	STEEL PLATE BEAM GUARD RAIL, TYPE A	LIN FT	237.5	237.5		
62800005	STEEL PLATE BEAM GUARD RAIL, TYPE B	LIN FT	400	400		
62800010	STEEL PLATE BEAM GUARD RAIL, TYPE C	LIN FT	450	450		
62800035	TRAFFIC BARRIER TERMINAL, TYPE 1	EACH	4	4		
62800050	TRAFFIC BARRIER TERMINAL, TYPE 3	EACH	5	5		
62800090	TRAFFIC BARRIER TERMINAL, TYPE 7	EACH	2	2		
62800180	TRAFFIC BARRIER TERMINAL, TYPE 3 (SPECIAL)	EACH	1	1		
62900300	CHAIN LINK FENCE 6'	LIN FT	435	435		
62910300	CHAIN LINK FENCE REMOVAL	LIN FT	710	710		
62910800	CHAIN LINK GATES REMOVAL	EACH	2	2		
63300300	STEEL PLATE BEAM GUARD RAIL REMOVAL	LIN FT	1,030	1030		
63900100	FURNISING AND ERECTING RIGHT-OF-WAY MARKERS	EACH	12	8	4	
64000510	FIRE HYDRANTS TO BE REMOVED AND REPLACED	EACH	1	1		
64200100	SEEDING, CLASS I	ACRE	2.9	1.2	1.7	
64200400	NITROGEN FERTILIZER NUTRIENT	POUND	324	176	148	
64200500	PHOSPHORUS FERTILIZER NUTRIENT	POUND	648	352	296	
64200600	POTASSIUM FERTILIZER NUTRIENT	POUND	324	176	148	
64300120	MULCH, METHOD 2	TON	5.8	2.4	3.4	
64300400	EXCELSIOR BLANKET	SQ YD	150	62	88	
64300500	EMULSIFIED ASPHALT	GALLON	580	240	340	
64400100	SODDING	SQ YD	5,309	5109	200	
64400200	SUPPLEMENTAL WATERING	UNIT	16	15.4	0.6	
64600400	ENGINEER'S FIELD OFFICE, TYPE A	CAL MO	6	4.2	1.8	
64700090	TEMPORARY PAVEMENT MARKING	LIN FT	14,214	8496	5718	
64800450	TRAFFIC CONTROL AND PROTECTION, STANDARD 2303	L SUM	1	0.7	0.3	
64800500	TRAFFIC CONTROL AND PROTECTION, STANDARD 2311	L SUM	1	0.7	0.3	
64800800	TRAFFIC CONTROL AND PROTECTION, STANDARD 2316	L SUM	1	0.7	0.3	
65000100	MOBILIZATION	L SUM	1.0	0.7	0.3	

SUMMARY OF QUANTITIES

0 1 2 3 4 5 6 7 8 9 10 11 12 13 14 15 16 17 18 19 20 21 22 23 24

RTE	SECTION	COUNTY	TOTAL SHEETS	SHEET NO.
FAP 8 (ILL 50)	0240 WBRS-5	KANKAKEE	134	9
FHWA REG 4	ILLINOIS	PROJECT		

SUMMARY OF QUANTITIES

CODE NO.	ITEM	UNIT	TOTAL QUANTITY	CONSTRUCTION TYPE CODE: 1990-3A URBAN ROAD 1294+50 to 30+00	1990-3A RURAL ROAD 30+00 to 83+69.87	SFTY12 BRADLEY PARTICIPATION (50%)
*T2010100	SIGN PANEL - TYPE I	SQ FT	40			40
*T4010030	SIGNAL HEAD, 1-FACE, 3-SECTION, MAST ARM MOUNTED	EACH	6			6
*T4011520	SIGNAL HEAD, 1-FACE, 4-SECTION, WITH ONE DUAL-INDICATION SECTION BRACKET MOUNTED	EACH	2			2
*T4011530	SIGNAL HEAD, 1-FACE, 4-SECTION, WITH ONE DUAL-INDICATION SECTION, MAST ARM MOUNTED	EACH	2			2
*T4030100	TRAFFIC SIGNAL BACKPLATE	EACH	8			8
*T4085600	STEEL MAST ARM ASSEMBLY AND POLE, 44 FT	EACH	4			4
*T4110029	FULL-ACTUATED CONTROLLER, STANDARD SEQUENCE III, 5 PHASES IN TYPE IV CABINET	EACH	1			1
*T4160200	INDUCTION LOOP DETECTOR AMPLIFIER	EACH	9			9
*T4180100	DETECTOR LOOP	LIN FT	1,317		246 ○	1071
*T4201500	GALVANIZED STEEL CONDUIT, PUSHED 2"	LIN FT	47			47
*T4201600	GALVANIZED STEEL CONDUIT, PUSHED 2 1/2"	LIN FT	76			76
*T4201700	GALVANIZED STEEL CONDUIT, PUSHED 3"	LIN FT	52			52
*T4201900	GALVANIZED STEEL CONDUIT, PUSHED 4"	LIN FT	101			101
*T4207700	PVC CONDUIT IN TRENCH 1 1/4"	LIN FT	1,179		324 ○	855
*T4207900	PVC CONDUIT IN TRENCH 2"	LIN FT	25			25
*T4208000	PVC CONDUIT IN TRENCH 2 1/2"	LIN FT	38			38
*T4208100	PVC CONDUIT IN TRENCH 3"	LIN FT	54			54
*T4208300	PVC CONDUIT IN TRENCH 4"	LIN FT	28			28
*T4208400	PVC CONDUIT IN TRENCH 5"	LIN FT	8			8
*T4212400	ELECTRIC CABLE IN CONDUIT NO. 6 2/C	LIN FT	73			73
*T4214100	ELECTRIC CABLE IN CONDUIT NO. 14 1/C	LIN FT	29		29 ○	
*T4214203	ELECTRIC CABLE IN CONDUIT NO. 14 5/C	LIN FT	346			346
*T4214205	ELECTRIC CABLE IN CONDUIT NO. 14 7/C	LIN FT	1,431			1431
*T4218600	ELECTRIC CABLE IN CONDUIT NO. 14 2/C, TWISTED, SHIELDED	LIN FT	1,971			1971
*T4260500	SERVICE INSTALLATION, TYPE C	EACH	1			1
*T4270200	CONCRETE FOUNDATION, TYPE D	LIN FT	3.5			3.5
*T4270400	CONCRETE FOUNDATION, TYPE E 30-INCH DIAMETER	LIN FT	50			50
*T4280100	HANDHOLE	EACH	4			4
*T4280300	DOUBLE HANDHOLE	EACH	1			1
*T4290100	JUNCTION BOX	EACH	2			2
*T4300100	TRENCH AND BACKFILL	LIN FT	935		21 ○	914
*T5010100	THERMOPLASTIC PAVEMENT MARKING - LETTERS AND SYMBOLS	SQ FT	826	390	436	
*T5010200	THERMOPLASTIC PAVEMENT MARKING - LINE 4"	LIN FT	11,590	11,115	475	
*T5010400	THERMOPLASTIC PAVEMENT MARKING - LINE 6"	LIN FT	30,567	20,752	9815	
*T5010500	THERMOPLASTIC PAVEMENT MARKING - LINE 8"	LIN FT	1,940	1740	200	
*T5010600	THERMOPLASTIC PAVEMENT MARKING - LINE 12"	LIN FT	780	610	170	
*T5010700	THERMOPLASTIC PAVEMENT MARKING - LINE 24"	LIN FT	279	218	61	
T5040100	RAISED REFLECTIVE PAVEMENT MARKER	EACH	943	751	192	
T5090100	PRISMATIC CURB REFLECTOR	EACH	178	178		
T5100300	GUARD RAIL REFLECTORS	EACH	56	56		
X0320559	DUCTILE IRON WATER MAIN 16" IN CONCRETE CASING 24"	LIN FT	329	62	267	
X0320585	DUCTILE IRON WATER MAIN 16" IN CONCRETE CASING 24" - JACKED	LIN FT	65	65		
X0320586	DUCTILE IRON WATER MAIN 6" IN DUCTILE IRON CASING 16"	LIN FT	80	80		
X0320587	WATER MAIN BLOW OFF VALVE	EACH	1	1		
*Z0013100	RELOCATE EXISTING FLASHING BEACON	EACH	1		1 ○	
*Z0015500	TERMINAL FACILITY	EACH	2		2 ○	
Z0001100	AIR RELEASE VALVE	EACH	1		1	
Z0013700	CONSTRUCTING TEST STRIP	EACH	2	1	1	
Z0023100	FIELD TILE JUNCTION VAULTS, 2' DIA	EACH	2		2	
X0320588	LOCATE EXISTING WELLS - DRILLED	EACH	1		1	
Z0039200	PERMANENT SURVEY MARKERS, TYPE I	EACH	1.0	1		
Z0041500	PLUG EXISTING CULVERTS	EACH	4	3	1	
X0320589	WATER MAIN REMOVAL 16"	LIN FT	6,550	3300	3250	

* SPECIALTY ITEMS

○ CONST. CODE SFTY-1F

GENERAL NOTES

THE THICKNESS OF BITUMINOUS MIXTURES SHOWN ON THE PLANS IS THE NOMINAL THICKNESS. DEVIATIONS FROM THE NOMINAL THICKNESS WILL BE PERMITTED WHEN SUCH DEVIATIONS OCCUR DUE TO IRREGULARITIES IN THE EXISTING SURFACE OR BASE ON WHICH THE BITUMINOUS MIXTURE IS PLACED.

EXCEPT AS NOTED IN THE PLANS, PAVEMENT GRADES SHOWN ARE AT THE TOP OF PAVEMENT SURFACES.

BEFORE ORDERING PIPE CULVERTS OR PIPE DRAINS, THE CONTRACTOR SHALL CONSULT THE ENGINEER FOR EXACT LENGTHS.

THE ENGINEER SHALL BE THE SOLE JUDGE CONCERNING CURING TIME FOR THE VARIOUS BITUMINOUS LIFTS.

FOR STABILIZATION, ALL TYPE III BARRICADES SHALL REQUIRE A MINIMUM OF FOUR SAND BAGS PER BARRICADE.

FOR ALL TEMPORARY PAVEMENT MARKINGS ON FINAL SURFACES (I.E., MAINLINE PAVEMENT), ONLY TEMPORARY PAVEMENT MARKING TAPE SHALL BE USED.

WHERE SECTION OR SUBSECTION MONUMENTS ARE ENCOUNTERED, THE ENGINEER SHALL BE NOTIFIED BEFORE SUCH MONUMENTS ARE REMOVED. THE CONTRACTOR SHALL PROTECT AND CAREFULLY PRESERVE ALL MONUMENTS UNTIL AN AUTHORIZED SURVEYOR OR AGENT HAS WITNESSED OR OTHERWISE REFERENCED THEIR LOCATION. THE CONTRACTOR WILL BE RESPONSIBLE FOR HAVING AN AUTHORIZED SURVEYOR REESTABLISH ANY SECTION OR SUBSECTION MONUMENTS DESTROYED BY HIS OPERATIONS.

PROTECTIVE COAT SHALL BE APPLIED TO THE SURFACES OF NEW CONCRETE ACCORDING TO ARTICLES 408.23 AND/OR 503.12 OF THE STANDARD SPECIFICATIONS.

ONLY THOSE TREES DESIGNATED BY THE ENGINEER OR LISTED IN THE TREE REMOVAL SCHEDULE SHALL BE REMOVED. THE CONTRACTOR WILL PROTECT ALL REMAINING TREES FROM DAMAGE DUE TO HIS OPERATIONS.

DO NOT INCLUDE MULCH OR EMULSIFIED ASPHALT IN EXCELSIOR BLANKET AREAS.

THERMOPLASTIC PAVEMENT MARKINGS AND PAINT STRIPING QUANTITIES ARE APPROXIMATE ONLY. PAYMENT SHALL BE MADE FOR ACTUAL QUANTITIES USED AS MEASURED IN THE FIELD.

THE ENGINEER SHALL DETERMINE THE LOCATION OF THE STEEL PLATE BEAM GUARDRAIL. NO S.P.B.G.R. ELEMENT SHALL BE BUILT BELOW THE MINIMUM HEIGHTS SHOWN IN STANDARD 2230. EXCEPT AT TERMINAL SECTIONS (TYPE I OR TYPE IA), THE S.P.B.G.R. SHALL BE ALIGNED WITH NO HORIZONTAL OR VERTICAL CURVATURE ALLOWED EXCEPT AS DIRECTED BY THE ENGINEER.

A FLAGMAN SHALL BE AVAILABLE FOR PATCH COOLING. SEE ARTICLE 109.04 OF THE STANDARD SPECIFICATIONS.

TEMPORARY PAVEMENT MARKING TAPE SHALL BE USED TO OUTLINE EXIT AND ENTRANCE RAMPS FOR THE PRIME COAT APPLICATION AND EACH RESURFACING LIFT.

THE EXISTING ROAD SIGNS THAT INTERFERE WITH CONSTRUCTION WILL BE REMOVED OR RELOCATED AS DIRECTED BY THE ENGINEER. AFTER THE CONSTRUCTION IS COMPLETED, THE CONTRACTOR WILL REPLACE THE SIGNS AS DIRECTED BY THE ENGINEER. THIS WORK WILL NOT BE PAID SEPARATELY BUT SHALL BE CONSIDERED INCIDENTAL TO THE CONTRACT AND NO COMPENSATION WILL BE ALLOWED.

WHEN PLACING BITUMINOUS MATERIALS ON MULTILANE HIGHWAYS, THE "SLOW TRAFFIC" LANE ADJOINING THE CENTERLINE OF THE ROADWAY SHALL BE PLACED INITIALLY. ON THE NEXT DAY, THE OUTSIDE LANE ADJOINING THIS LANE SHALL BE PLACED.

UNLESS OTHERWISE DIRECTED BY THE ENGINEER, RIGHT OF WAY MARKERS SHALL BE INSTALLED AS A FIRST ITEM OF CONSTRUCTION ON THIS CONTRACT.

NO COMPACTION FACTOR SHALL BE USED FOR TOPSOIL EXCAVATION AND TOPSOIL PLACEMENT.

ABANDONED UNDERGROUND UTILITIES THAT CONFLICT WITH CONSTRUCTION SHALL BE DISPOSED OUTSIDE THE LIMITS OF THE RIGHT OF WAY ACCORDING TO ARTICLE 202.03 OF THE STANDARD SPECIFICATIONS AND AS DIRECTED BY THE ENGINEER. THIS WORK WILL NOT BE PAID FOR SEPARATELY BUT SHALL BE CONSIDERED INCIDENTAL TO EARTH EXCAVATION AND NO ADDITIONAL COMPENSATION WILL BE ALLOWED.

ANY REFERENCE TO A STANDARD IN THESE PLANS SHALL BE INTERPPRETED TO MEAN THE EDITION AS INDICATED BY THE SUBNUMBER LISTED IN THE INDEX OF SHEETS OF THE COPY OF THE STANDARD INCLUDED IN THESE PLANS.

THE FOLLOWING RATES OF APPLICATION HAVE BEEN ASSUMED IN CALCULATING PLAN QUANTITIES:

GRANULAR MATERIALS	2.05	TONS/CU YD
BITUMINOUS MATERIALS PRIME COAT	0.08	GAL/SQ YD OR .375 GAL/SQ YD
AGGREGATE PRIME COAT	0.002	TONS/SQ YD
BITUMINOUS CONCRETE SURFACE COURSE	112	LBS/SQ YD/INCH
NITROGEN FERTILIZER NUTRIENT	80	LBS/ACRE
PHOSPHORUS FERTILIZER NUTRIENT	160	LBS/ACRE
POTASSIUM FERTILIZER NUTRIENT	80	LBS/ACRE
TEMPORARY PAVEMENT MARKING	10	FT/100 FT OF APPLICATION
MIXTURE FOR CRACKS, JOINTS & FLANGEWAYS	0.0003	TONS/SQ YD
LEVEL BINDER (HAND METHOD)	0.0005	TONS/SQ YD
LEVEL BINDER (MACHINE METHOD)	112	LBS/SQ YD/INCH
MULCH METHOD 2	2	TONS/ACRE
EMULSIFIED ASPHALT	100	GAL/TON OF MULCH

THE CONTRACTOR SHALL BE RESPONSIBLE FOR PROTECTING UTILITY PROPERTY FROM CONSTRUCTION OPERATIONS AS OUTLINED IN ARTICLE 107.26 OF THE STANDARD SPECIFICATIONS. THE JULIE NUMBER IS 800-892-0123. A MINIMUM OF FORTY-EIGHT HOURS ADVANCE NOTICE IS REQUIRED.

MEMBERS OF JULIE KNOWN TO BE WITHIN THE LIMITS OF THE IMPROVEMENT ARE:

NORTHERN ILLINOIS GAS
KANKAKEE WATER CO.
ILLINOIS BELL TELEPHONE
COMMONWEALTH EDISON
PHILLIPS PIPE LINE CO

STATE OF ILLINOIS
DEPARTMENT OF TRANSPORTATION
DISTRICT THREE

PREPARED BY: Andrew Gorka
DISTRICT ENGINEER OF DESIGN

DATE: Jan 22, 1988

EXAMINED BY: [signature]
DISTRICT ENGINEER OF CONSTRUCTION

[signature]
DISTRICT ENGINEER OF MAINTENANCE

[signature]
DISTRICT ENGINEER OF MATERIALS

[signature]
DISTRICT ENGINEER OF TRAFFIC

[signature]
DISTRICT ENGINEER OF PLANNING

SUMMARY OF QUANTITIES & GENERAL NOTES

RTE	SECTION	COUNTY	TOTAL SHEETS	SHEET NO.
FAP 840 (ILL 50)	840 W&RS-5	KANKAKEE	134	
FHWA REG. 4	ILLINOIS	PROJECT		

PAVEMENT REMOVAL AND REPLACEMENT (1)

LOCATION	LANE	TYPE I	TYPE II
1299+50 LT	OUTSIDE		11.0
1322+00 LT	INSIDE		9.8
1322+00 LT	OUTSIDE		10.7
3+58 LT	INSIDE		5.1
3+58 LT	OUTSIDE		5.1
3+58 RT	INSIDE		6.5
3+58 RT	OUTSIDE		5.1
5+13 LT	INSIDE	3.1	
5+13 LT	OUTSIDE	3.2	
5+13 RT	INSIDE	3.1	
5+13 RT	OUTSIDE	3.2	
6+08 LT	INSIDE	3.1	
6+08 LT	OUTSIDE	3.2	
6+08 RT	INSIDE	3.1	
6+08 RT	OUTSIDE	3.2	
8+30 LT	INSIDE	3.1	
8+30 LT	OUTSIDE	3.2	
8+30 RT	INSIDE	3.1	
8+30 RT	OUTSIDE	3.2	
11+85 LT	INSIDE	3.1	
11+85 LT	OUTSIDE	3.2	
11+85 RT	INSIDE	3.1	
11+85 RT	OUTSIDE	3.2	
13+18 LT	INSIDE	3.1	
13+18 LT	OUTSIDE	3.2	
13+18 RT	INSIDE	3.1	
13+18 RT	OUTSIDE	3.2	
14+82 LT	INSIDE	3.1	
14+82 LT	OUTSIDE	3.2	
14+82 RT	INSIDE	3.1	
14+82 RT	OUTSIDE	3.2	
15+00 LT	INSIDE	5.0	
15+00 LT	OUTSIDE	5.0	
15+00 RT	INSIDE	5.0	
15+00 RT	OUTSIDE	5.0	
16+45 LT	INSIDE	3.1	
16+45 LT	OUTSIDE	3.2	
16+45 RT	INSIDE	3.1	
16+45 RT	OUTSIDE	3.2	
17+81 LT	INSIDE		8.1
17+81 LT	OUTSIDE		9.2
17+81 RT	INSIDE		8.1
17+81 RT	OUTSIDE		9.2
18+43 LT	INSIDE	3.1	
18+43 LT	OUTSIDE	3.2	
18+43 RT	INSIDE	3.1	
18+43 RT	OUTSIDE	3.2	
20+71 LT	INSIDE	3.1	
20+71 LT	OUTSIDE	3.2	
20+71 RT	INSIDE	3.1	
20+71 RT	OUTSIDE	3.2	
23+23 LT	INSIDE	3.1	
23+23 LT	OUTSIDE	3.2	
23+23 RT	INSIDE	3.1	
23+23 RT	OUTSIDE	3.2	
24+47 LT	INSIDE	3.1	
24+47 LT	OUTSIDE	3.2	
24+47 RT	INSIDE	3.1	
24+47 RT	OUTSIDE	3.2	
27+03 LT	INSIDE	3.1	
27+03 LT	OUTSIDE	3.2	
27+03 RT	INSIDE	3.1	
27+03 RT	OUTSIDE	3.2	
29+95 LT	INSIDE		6.1
29+95 LT	OUTSIDE		6.2
29+95 RT	INSIDE		6.1
29+95 RT	OUTSIDE		6.2
33+11 LT	INSIDE	3.1	
33+11 LT	OUTSIDE	3.2	
33+11 RT	INSIDE	3.1	
33+11 RT	OUTSIDE	3.2	
36+41 LT	INSIDE	3.1	
36+41 LT	OUTSIDE	3.2	
36+41 RT	INSIDE	3.1	
36+41 RT	OUTSIDE	3.2	
39+28 LT	INSIDE	3.1	
39+28 LT	OUTSIDE	3.2	
39+28 RT	INSIDE	3.1	
39+28 RT	OUTSIDE	3.2	
41+09 LT	INSIDE	3.1	
41+09 LT	OUTSIDE	3.2	
41+09 RT	INSIDE	3.1	
41+09 RT	OUTSIDE	3.2	
45+84 LT	INSIDE	3.1	
45+84 LT	OUTSIDE	3.2	
45+84 RT	INSIDE	3.1	
45+84 RT	OUTSIDE	3.2	
55+52 LT	INSIDE	3.6	
55+52 LT	OUTSIDE	3.8	
55+52 RT	INSIDE	3.6	
55+52 RT	OUTSIDE	3.8	
58+79 LT	INSIDE	3.6	
58+79 LT	OUTSIDE	3.8	
58+79 RT	INSIDE	3.6	
58+79 RT	OUTSIDE	3.8	
61+29 LT	INSIDE	3.6	
61+29 LT	OUTSIDE	3.8	
61+29 RT	INSIDE	3.6	
61+29 RT	OUTSIDE	3.8	
62+42 LT	INSIDE		8.7
62+42 LT	OUTSIDE		9.5
62+42 RT	INSIDE		8.7
62+42 RT	OUTSIDE		9.5
TOTALS		278.2	147.0

BITUMINOUS SURFACE REMOVAL (COLDMILLING) VAR. DEPTH

LOCATION	SQ YD
BEGINNING TAPER	
STA 1294+50 NBL	111
STA 1294+50 SBL	111
RAMPS	
H	60
E	77
D	69
A	53
C	62
F	69
B	69
G	51
STA 28+25 TO STA 30+00 NBL	339
STA 28+25 TO STA 30+00 SBL	339
ROBERT HALL ROAD	
(WEST) EBL	36
(WEST) WBL	36
(EAST) EBL	24
(EAST) WBL	24
FRONTAGE ROAD	
NBL	25
SBL	25
NORTH 450 EAST ROAD	
WBL	144
EBL	125
INDIAN OAK ROAD	
WBL	25
EBL	25
ST. GEORGE ROAD	
WBL	25
EBL	25
ENDING TAPER	
STA 63+00 NBL	77
STA 63+00 SBL	77
TOTAL	2103

SCHEDULE OF CONTINGENCY QUANTITIES

AMOUNT	UNITS	ITEM
100	TON	BITUMINOUS SURFACE CSE. MIX. C CL. I
500	TON	AGGREGATE SURFACE CSE. TYPE B
50	LIN FT	STORM SEWER FIELD TILE REPLACEMENT 4"
50	LIN FT	STORM SEWER FIELD TILE REPLACEMENT 6"
50	LIN FT	STORM SEWER FIELD TILE REPLACEMENT 8"
50	LIN FT	STORM SEWER FIELD TILE REPLACEMENT 10"
50	LIN FT	STORM SEWER FIELD TILE REPLACEMENT 12"
50	LIN FT	PIPE DRAINS 6"
50	LIN FT	PIPE DRAINS 8"
50	LIN FT	PIPE DRAINS 10"
50	LIN FT	PIPE DRAINS 12"
1000	LIN FT	EXPLORATION TRENCH 52" DEPTH
100	LIN FT	EXPLORATION TRENCH 72" DEPTH
2	EACH	FIELD TILE JUNCTION VAULT 24"
5	CU YD	CLASS X CONCRETE FOR HEADWALLS
2	EACH	INLETS TO BE RECONSTRUCTED
5944	SQ YD	PROTECTIVE COAT
20	CU YD	ROCK EXCAVATION FOR STRUCTURES
1	EACH	MANHOLES TO BE ADJUSTED

WATERMAIN SCHEDULE

LOCATION STATION TO STATION	DUCTILE IRON WATERMAIN 16" LIN FT	16" IN 24" CONCRETE CASING LIN FT	16" IN 24" CONC CASING JACKED LIN FT	6" IN 16" O. I. CASING LIN FT	TRENCH BACKFILL CU YD	BLOWOFF VALVE EACH	AIR RELEASE VALVE EACH	WATER VALVES 6" EACH	WATER VALVES 16" EACH	VALVE BOXES 6" EACH	FIRE HYDRENTS TO BE RELOCATED EACH	VALVE VAULTS TYPE A 4' DIA EACH
1336+35 TO 1337+03	32		65						1			1
1337+03 TO 1342+73.44	570				75.8							
2+75.24 TO 3+67	30	62				1						
3+67 TO 3+96	49				343.6							
3+96 TO 15+93	1197			80	63.4			1		1		
15+93 LT TO 15+93 RT					321.2						1	
15+93 TO 29+00	1308				267.8		1					
29+00 TO 43+00	1320	80			74.3				1			1
43+00 TO 62+00	1798	102			78.8							
62+00 TO 62+69	13	85										
TOTALS	6317	329	65	80	1224.9	1	1	1	2	1	1	2

SCHEDULES OF QUANTITIES

RTE	SECTION	COUNTY	TOTAL SHEETS	SHEET NO.
FAP 840 (ILL 50)	140 W&RS-B	KANKAKEE	134	11
FEDERAL REG.4	ILLINOIS	PROJECT		

EARTHWORK QUANTITIES

LOCATION STATION TO STATION	THEORETICAL 1 CUT CU YD	THEORETICAL 2 FILL CU YD	TOPSOIL SOURCES 3 IN CUT CU YD	TOPSOIL SOURCES 4 IN FILL CU YD	TOPSOIL REQUIRED 5 IN CUT CU YD	TOPSOIL REQUIRED 6 IN FILL CU YD	ADJUSTED 7 CUT CU YD	ADJUSTED 8 FILL CU YD	WASTE 9 WASTE CU YD	TOPSOIL PLACEMENT 4" 10 PLACEMENT SQ YD	REMARKES
ILLINOIS ROUTE 50 1330+00 TO 10+00 (AREA #1)	1687	1307	0	93	84	382	1771	1018	0	4194	HALL 396 CU YDS TO AREA #3 HALL 103 CU YDS TO AREA #2
10+00 TO 30+00 (AREA #2)	2008	1493	89	827	84	371	2003	1949	0	4095	HALL 373 CU YDS TOPSOIL TO AREA #1 HALL 79 CU YDS TOPSOIL TO FRONTAGE ROAD HALL 9 CU YDS TOPSOIL TO ROBERT HALL ROAD
30+00 TO 50+00 (AREA #3)	1609	1563	50	414	20	397	1579	1580	0	3753	HALL 3 CU YDS TOPSOIL TO NORTH 450 EAST ROAD HALL 44 CU YDS TOPSOIL TO ROBERT HALL ROAD
50+00 TO 63+00 (AREA #4)	762	1111	4	280	0	270	758	1121	0	2430	HALL 11 CU YDS TOPSOIL TO INDIAN OAKS ROAD HALL 3 CU YDS TOPSOIL TO ST. GEORGE ROAD
SUBTOTALS	6066	5474	143	1614	188	1420	6111	5668	0	14472	
FRONTAGE ROAD STAGE I STAGE II	 805 521	 50 74	 100 0	 0 0	 85 69	 14 11	 790 590	 36 63	 0 314	 891 720	HALL 330 CU YDS TO AREA #2 HALL 489 CU YDS TO AREA #4 HALL 1 CU YD TO NORTH 450 EAST ROAD HALL 91 CU YDS TO ROBERT HALL ROAD (WEST) HALL 22 CU YDS TO ROBERT HALL ROAD (EAST)
SUBTOTALS	1326	124	100	0	154	25	1380	99	314	1611	
ROBERT HALL ROAD EAST WEST	 61 133	 75 223	 0 0	 0 0	 0 0	 9 44	 61 133	 66 179	 0 0	 81 396	
SUBTOTALS	194	298	0	0	0	53	194	245	0	27	
NORTH 450 EAST ROAD	17	17	0	0	0	3	17	14	0	27	
INDIAN OAK ROAD	71	12	0	0	0	11	71	1	0	99	HALL 70 CU YDS TO AREA #4
ST. GEORGE ROAD	79	6	0	0	0	3	79	3	0	27	HALL 75 CU YDS TO AREA #4
TOTALS	7753	5931	243	1614	342	1515	7852	6030	314	16713	

COLUMN 7 = (COLUMN 1) - (COLUMN 3) + (COLUMN 5)
COLUMN 8 = (COLUMN 2) - (COLUMN 6) + (COLUMN 4)
SHRINKAGE FACTOR = 1.25
(COLUMN 7) - ((SHRINKAGE FACTOR) X (COLUMN 8)) = EXCESS OR DEFICIT OF FILL MATERIAL
((COLUMN 5) + (COLUMN 6)) X 27 / 3 = COLUMN 10

LANDSCAPE QUANTITIES

LOCATION STATION TO STATION	SEEDING CLASS I ACRE	NITROGEN FERT NUTR POUNDS	PHOSPHORUS FERT NUTR POUNDS	POTASSIUM FERT NUTR POUNDS	MULCH METH. 2 TON	EMULSIFIED ASPHALT GALLON	SODDING SQ YD	SUPPLEMENTAL WATERING UNIT	EXCELSIOR BLANKET SQ YD
ILLINOIS ROUTE 50									
1332+00 TO 1342+60 LT & RT	1.0	80.0	160.0	80	2.0	200			
3+00 TO 33+00 LT		40.0	80.0	40			2558	7.7	
3+00 TO 27+60 RT		40.0	80.0	40			2551	7.7	
41+50 LT		8.0	16.0	8			150	0.5	
54+00 RT		4.0	8.0	4.0			50	0.1	
33+00 LT TO 56+00 LT AND 27+60 RT TO 56+00 RT	1.3	104.0	208.0	104	2.6	260			
56+70 LT TO 62+50 LT AND 56+70 RT TO 62+50 RT	0.4	32.0	64.0	32	0.8	80			
FRONTAGE ROAD 200+25 TO 206+00 LT & RT	0.2	16.0	32.0	16	0.4	40			
CATCH BASINS & END SECTIONS									150
TOTALS	2.9	324.0	648.0	324	5.8	580	5309	16	150

RTE	SECTION	COUNTY	TOTAL SHEETS	SHEET NO.
FAP 940 (ILL 50)	40 WBRS-6	KANKAKEE	[illegible]	[illegible]
CHUA REG 4	ILLINOIS	PROJECT		

FURNISH & ERECT ROW MARKERS

STATION	OFFSET FEET	EACH
1340+61.66	136.57 LT	1.0
1341+66.68	215.00 LT	1.0
1342+95.29	290.00 LT	1.0
1342+47.52	83.81 RT	1.0
1342+56.39	114.09 RT	1.0
1342+65.33	256.37 LT	1.0
3+98.74	44.72 LT	1.0
4+00.59	45.29 RT	1.0
55+77.24	44.41 RT	1.0
56+20.19	64.21 RT	1.0
56+80.12	59.29 RT	1.0
57+07.91	44.47 RT	1.0
TOTALS		12.0

PCC DRIVEWAY PAVEMENT

Station	Width IN FEET	6" SQ YD	8" SQ YD
4+18 LT	30.0		49.2
5+62 LT	30.0		49.2
6+71 RT	35.0		55.5
6+71 LT	34.0		54.3
7+85 LT	34.0		54.3
8+59 RT	35.0		55.5
9+00 RT	30.0		49.2
9+25 LT	30.0		49.2
10+00 RT	12.0	18.0	
11+10 RT	20.0		36.5
11+55 LT	30.0		49.2
12+12 RT	32.0		51.7
13+47 LT	35.0		55.5
13+62 RT	12.0	18.0	
15+55 RT	24.0		41.6
16+33 RT	12.0	18.0	
17+69 RT	12.0	18.0	
18+15 RT	32.0		51.7
18+15 LT	28.0		46.6
19+73 RT	28.0		46.6
20+02 LT	24.0		41.6
20+50 RT	18.0		34.0
22+67 RT	12.0		26.3
23+00 LT	24.0		41.6
24+28 LT	12.0		26.3
24+76 LT	35.0		55.5
26+35 LT	32.0		51.7
26+95 RT	12.0	18.0	
26+90 LT	12.0	18.0	
28+80 LT	35.0		55.5
31+25 LT	32.0		51.7
40+70 LT	35.0		55.5
42+60 LT	35.0		55.5
54+59 RT	35.0		55.5
55+23 RT	35.0		55.5
ROBERT HALL RD 8+50 LT	25.0		42.8
TOTALS		108.0	1487.6

COMBINATION CURB & GUTTER REMOVAL

LOCATION	LIN. FT.
N W Quadrent Robert Hall Road	253.0
Commercial Entrance 4+18 LT	50.0
Sta 4+40 LT to Sta 5+40 LT	130.0
Commercial Entrance 5+62 LT	50.0
Sta 5+85 LT to Sta 6+50 LT	96
Sta 6+90 LT to Sta 7+70 LT	99.0
Sta 8+00 LT to Sta 8+15 LT	22.0
Sta 13+20 LT to Sta 13+30 LT	34.0
Commercial Entrance 13+47 LT	39
Sta 13+65 LT to Sta 14+50 LT	75
Sta 22+80 LT	24.0
Sta 23+20	24
	896.0

CURB AND GUTTER QUANTITIES

LOCATION	CC&G B-6.24 LIN. FT.	CC&G M-6.24 LIN. FT.	CURB TYPE B LIN. FT.
S W Quad. Frontage & Robert Hall Roads			
Sta 200+92 RT to Sta 200+38 RT	35.8		
Sta 8+36 RT to Sta 7+86 RT	48.3		
Frontage Road Island		43.0	
S E Quad. Frontage & Robert Hall Roads			
Sta 200+92 LT to Sta 200+44 LT	41.8		
Sta 9+14 RT to Sta 9+62 RT	49.4		
Sta 2+23 LT to Sta 2+83 LT	64.8		
N W Quad. Robert Hall & ILL. 50			
Sta 7+86 LT to Sta 9+14 LT	127.6		
Sta 9+14 LT to Sta 9+70 LT	56.2		
Sta 9+70 LT to Sta 3+61 LT	52.1		
Sta 3+61 LT to Sta 4+17 LT	56.9		
N W Quad. Robert Hall & ILL. 50	85.5		
N W Quad. Robert Hall & ILL. 50	60.5		
Sta 4+17.07 LT to Sta 29+13.82 LT	2496.8		
Sta 3+54.74 RT to Sta 30+00 RT	2645.3		
S W Quad. N 450 E Road & ILL. 50	67.5		
N W Quad. N 450 E Road & ILL. 50	67.5		
Sta 30+25.93 LT to Sta 55+71.12 LT	2545.3		
Sta 30+00 RT to Sta 54+29.50 RT	2428.5		
S W Quad. St. George 50			
Sta 53+92 to Sta [illegible]			47.5
Sta 54+28.5 Radii	17.3		
Sta 54+28.5 to Sta [illegible]	54.5		
Sta 54+83 Radii	14.1		
Sta 54+83 to 54+97.4 (31' RT)	14.4		
Sta 54+97.4 Radii	14.1		
Sta 54+83 to 54+97.4 (44' RT)	14.4		
Sta 54+94.4 to Sta 55+52.06	54.7		
Sta 54+52.06 Radii	17.3		
Sta 54+52.06 to Sta 56+36.99	120.9		
Sta 55+78 to Sta 56+21			47.4
Sta 55+21 to Sta 56+29			71.1
Sta 56+36.99 Radii	17.3		
	12536.0	43.0	116.0

TREE REMOVAL

Station	Offset	6-15 In. Dia.	Over 15 In. Dia.
3+55	75 LT	10	
3+85	56 LT	10	
4+49	42 LT	8	
4+71	42 LT	8	
4+91	42 LT	8	
5+09	42 LT	12	
10+73	40 RT		24
12+22	41 LT		24
18+00	41 LT		26
20+72	41 LT		24
22+25	41 RT		24
25+27	41 RT		24
30+66	41 LT		24
30+66	41 RT		30
32+14	41 LT		24
32+88	41 LT		24
32+93	40 RT		30
34+83	41 RT		18
36+66	40 RT		30
38+16	40 LT		30
39+67	41 LT		30
40+44	41 RT		36
44+21	40 LT		36
		56	458

CLASS X CONCRETE (OUTLETS)

LOCATION	STATION	CU. YD.
Frontage Road	200+68 LT	3.4
Mainline	2+47 LT	3.4
Mainline	62+06 RT	3.4
Mainline	62+06 RT	3.4
		13.6

MEDIAN SURFACE REMOVAL AND REPLACEMENT

LOCATION STATION TO STATION	SQ FT
1294+50 TO 1298+60	6084.4
1298+60 TO 1306+13	8162.5
1306+13 TO 1316+30	10623.8
1316+95 TO 1331+70	15989.0
1331+70 TO 1337+18	5503.0
TOTAL	46362.7

GUTTER OUTLET (SPECIAL)

LOCATION	STATION	EACH
Frontage Road	200+74 RT	1.0
Robert Hall Road	7+86 LT	1.0
Robert Hall Road	7+97 RT	1.0
Robert Hall Road	11+16 LT	1.0
Mainline	1342+28 RT	1.0
Robert Hall Road	11+60 RT	1.0
N 450 E Road	0+77 LT	1.0
N 450 E Road	0+77 RT	1.0
Indian Oaks Road	0+72 LT	1.0
Indian Oaks Road	0+90 RT	1.0
St. George Road	100+66 LT	1.0
		11.0

COMB CC&G REMOVAL AND REPLACEMENT

STATION	LOCATION	LIN FT	FRAME AND GRATE T-11 EACH
1294+50 LT	MEDIAN	6.0	1.0
1294+50 RT	MEDIAN	6.0	1.0
1297+85 LT	MEDIAN	10.0	1.0
1297+85 RT	MEDIAN	10.0	1.0
1302+00 RT	MEDIAN	24.0	1.0
1302+00 LT	MEDIAN	18.0	1.0
1306+16	NOSE	17.0	1.0
1309+00 LT	MEDIAN	6.0	1.0
1309+00 RT	MEDIAN	26.0	1.0
1313+00 RT	MEDIAN	6.0	1.0
1313+70 LT	MEDIAN	6.0	1.0
1316+52	NOSE	17.0	1.0
1316+90	NOSE	16.0	
1321+00 LT	MEDIAN	28.0	1.0
1321+00 RT	MEDIAN	10.0	1.0
1325+00 LT	MEDIAN	6.0	1.0
1325+00 RT	MEDIAN	5.0	1.0
1328+02 LT	MEDIAN	23.0	1.0
1328+02 RT	MEDIAN	16.0	1.0
1332+00 LT	MEDIAN	5.0	1.0
1332+00 RT	MEDIAN	24.0	1.0
		285.0	20.0

STONE RIPRAP

LOCATION	SQ YD
STATION 6+08 RT	33
STATION 14+64 RT	10
TOTALS	43

CONCRETE MEDIAN SURFACE 4"

LOCATION	SQ. FT.
Frontage Road Island	69.0
Sta 56+90 +/- RT.	208.0
Sta 56+00 +/- RT.	979.0
	1256.0

SCHEDULES OF QUANTITIES

SITE	SECTION	COUNTY	TOTAL SHEETS	SHEET NO.
FAP 840 (ILL 50)	840 W&RS-5	KANKAKEE	134	12
FHWA, FED.A	ILLINOIS	PROJECT		

THERMOPLASTIC PAVEMENT MARKINGS

LOCATION	4" WHITE LIN FT	4" YELLOW LIN FT	6" WHITE LIN FT	6" YELLOW LIN FT	8" WHITE LIN FT	WHITE LIN FT	12" YELLOW LIN FT	24" WHITE LIN FT	LETTERS AND SYMBOLS SQ FT	RAISED REFLECTIVE PAVEMENT MARKERS EACH	PRISMATIC CURB REFLECTOR EACH
STA 1294+50 TO STA 1342+73.44											
SOLID EDGLINE	9125										
DASHED CENTERLINE			2412							238	
SOLID MEDIAN LINE				10405						26	170
SOLID STORAGE LANE LINE					200					6	
MEDIAN DIAGONALS							230				
RAMPS A TO H											
SOLID & DASHED EDGLINES	490	60			1440					89	
DIAGONALS						380					
ROBERT HALL ROAD INTERSECTION											
SOLID EDGLINES	1330										8
DASHED CENTERLINE				390							
STOP BARS								203			
LARGE TURN ARROWS									78		
STA 2+75.24 TO STA 30+33											
DASHED CENTERLINE			1270							128	
DASHED MEDIAN LINE				1175							
SOLID MEDIAN LINE				5080						128	
SOLID STORAGE LANE LINE					100					4	
LARGE TURN ARROWS									312		
NORTH 450 EAST ROAD											
SOLID EDGLINE	60										
NO PASSING ZONE		50									
DASHED CENTERLINE				20							
STOP BAR								15			
STA 30+00 TO STA 56+40.95											
DASHED CENTERLINE			1275							128	
DASHED MEDIAN LINE				1175							
SOLID MEDIAN LINE				5120							
SOLID STORAGE LANE LINE					100						
LARGE TURN ARROWS									312		
ST. GEORGE ROAD INTERSECTION											
SOLID EDGLINE	105										
NO PASSING ZONE		50									
DASHED CENTERLINE				20							
STOP BAR								61			
RR MARKINGS & ARROWS									124		
STA 56+40.95 TO STA 63+10											
SOLID EDGELINE	160										
SOLID CENTERLINE		160								30	
DASHED CENTERLINE			305							30	
SOLID MEDIAN LINE				1920						4	
SOLID STORAGE LANE LINE					100						
MEDIAN DIAGONALS							170				
SUBTOTALS BY COLOR	11270	320	5262	25305	1940	380	400	279	826	943	178
TOTALS	11590		30567		1940	780		279	826	943	178

CHAIN LINK FENCE

LOCATION STATION TO STATION	CHAIN LINK GATES REMOVAL EACH	CHAIN LINK FENCE REMOVAL LIN FT	CHAIN LINK FENCE 6' LIN FT
ROBERT HALL ROAD			
7+95 TO 8+35 RT		40	
8+45 RT	1		
8+60 TO 9+15 RT		80	
EXISTING FRONTAGE ROAD			
100+60 TO 100+80 RT		20	
100+94 RT	1		
100+05 TO 102+40 RT		135	
ILLINOIS ROUTE 50			
1338+00 TO 1342+35 LT			435
TOTALS	2	710	435

GUARDRAIL QUANTITES

LOCATION STATION TO STATION	STEEL PLATE BEAM GUARDRAIL TYPE A LIN FT	TYPE B LIN FT	TYPE C LIN FT	TRAF BARR TERMINAL TYPE 1 EACH	TRAF BARR TERMINAL TYPE 3 EACH	TRAF BARR TERMINAL TYPE 7 EACH	TRAF BARR TERMINAL TYPE 3 (SPECIAL) EACH	SPBGR REMOVAL LIN FT	GUARDRAIL REFLECTORS EACH
1302+96 (MEDIAN)		100.0	25.0		2			200	6
1309+54 TO 1311+69 RT	62.5	25.0	62.5	1		1		143	9
1311+44 TO 1313+59 LT	37.5	25.0	62.5	1		1		105	8
1310+20 TO 1312+95 (MEDIAN)		200.0	250.0		2			258	20
1317+17 (MEDIAN)		50.0	25.0		1	1		200	4
1317+17 LT	137.5			2			1	125	9
TOTALS	237.5	400.0	450.0	4	5	2	1	1030	56

SCHEDULES OF QUANTITIES

ROUTE	SECTION	COUNTY	TOTAL SHEETS	SHEET NUMBER
FAP 640 (I.L. 50) & RS-5	120 WR	KANKAKEE	134	15
F.H.A. REG. 4	ILLINOIS	PROJECT		

STORM SEWER SCHEDULE

Station	Type	Description	Trench Backfill	Storm Sewer Spec 16"	Type I 8"	Type I 12"	Type I 18"	Type I 24"	Type I 30"	Type I 36"	Type I with Rubber Gasket 12"	Type I with Rubber Gasket 24"	Type I with Rubber Gasket 30"	Type I 56"R38	Type I 53"R19	Pipe Culverts Ty. I RCCP 24"	Pipe Culverts Ty. I RCCP 48"	RC Pipe Tees 12" Pipe 12.R	RC Pipe Tees 18" Pipe	RC Pipe Tees 18" Pipe 12.R	RC Pipe Tees 24" Pipe	RC Pipe Tees 24" Pipe 12.R	Inlets Ty. 3F&G. Ty. A	Inlets Ty. 3F&G. Ty. B	Inlets To Be Reconst. W/T.I.F.CL	Manholes 4' Ty. A T.I.F. CL	Manholes 4' Ty. A T.I.F. CL	Manholes 4' Ty. A T.5F. CL	Manholes 4' Ty. A T.5F. CL	Manholes 4' Ty. 3F&G	Manholes 5' Ty. A T.I.F. CL	Manholes 5' Ty. A T.I.F. CL	Manholes 5' Ty. A T.5F. CL	Manholes 5' Ty. A T.5F. CL	Manholes 6' Ty. A T.I.F. CL	Manholes 6' Ty. A T.I.F. CL	Manholes 6' Ty. A T.5F. CL	Manholes 6' Ty. A T.5F. CL	Manholes To Be Adjusted W/T.I.F.CL	Catch Basins Type C T.B. Grate/Inlet	Catch Basins Type C 2250 Inlet	End Sections PRC Flared 12"	End Sections PRC Flared 18"	End Sections PRC Flared 24"	End Sections PRC Flared 36"	End Sections PRC Flare El. Eqrs 24"	End Sections PRC Flare El. Eqrs 48"	Grating For Conc. Flared End Sections 24"	Grating For Conc. Flared End Sections 36"	Grating For Conc. Flared End Sections 24" Eqv.	Grating For Conc. Flared End Sections 48" Eqv.
Frontage Rd.																																																	
201+64 (Front. Rd.)	24"x76'	Ty. I RCCP														76																												2				2			
202+73 Rt. (Front. Rd.)	Manhole	4' Ty. A T.I.F. CL.					15																			1																1							
204+60 Rt. (Front. Rd.)	M.H. Adj.	New T.I.F. CL.																																				1											
Sub Totals Frontage Rd.			—	—	—	—	15	—	—	—	—	—	—	—	—	76	—	—	—	—	—	—	—	—	—	—	1	—	—	—	—	—	—	—	—	—	—	1	—	—	—	1	2	—	—	—	2	—	—	—
1338+72 Lt. & Rt.																																																	
Run #1																																																	
(Robert Hall Rd.)																																																	
8+00 Lt. - 9+62 Lt.	24"x160'	Ty. I R.G.										160																															1				1			
9+62 Lt.	Manhole	5' Ty. A T.5F. CL.																																																
9+62 Rt. - 9+62 Rt.	24"x20.5'	Ty. I						20.5																																			1				1			
9+62 Rt.	Manhole	5' Ty. A T.5F. CL.																																																
9+62 Rt. - 9+62 Lt.	30"x50'	Ty. I	28.5						50																																									
1342+62.20 Lt. - 9+62 Rt.	12"x36.5'	Ty. I R.G.	0.9								37.0																																						
9+62 Lt. - 3+58 Lt. (M.L.)	30"x45'	Ty. I R.G.											45																																				
(Mainline) Rte. 50																																																	
1342+44.70 Rt. - 1342+51.20 Rt.	24"x6.5'	Ty. I						6.5																																			1				1			
1342+51.20 Rt.	Manhole	4' Ty. A T.5F. CL.																																		1														
1342+55.20 Rt.	Inlet	Ty. A T. 3F.&G.																					1																											
1342+55.20 Rt. - 1342+51.20 Rt.	12"x4.5'	Ty. I	0.6			4.5																																											
1342+51.20 Rt. - 3+58 Rt.	24"x102.7'	Ty. I	16.0					102.7																																									
3+58 Rt.	Manhole	6' Ty. A T.5F. CL.	0.5																																			1											
3+58 Lt.	Manhole	5' Ty. A T.5F. CL.																																															
3+92 Lt.	Inlet	Ty. A T. 3F.&G.																					1																											
3+92 Lt. - 3+58 Lt.	16"x33.5'	Special	6.7	33.5																																													
3+58 Lt. - 3+58 Rt.	30"x81'	Ty. I	16.9						81																																								
4+08 Rt.	Inlet	Ty. A T. 3F.&G.																					1																											
4+08 Rt. - 3+58 Rt.	12"x46.8'	Ty. I	6.7			46.8																																											
3+58 Rt. - 5+18 Rt.	36"x155'	Ty. I								155																																							
5+18 Rt.	Manhole	6' Ty. A T.5F. CL.	0.4																																			1											
5+23 Lt.	Inlet	Ty. A T. 3F.&G.																					1																											
5+13 Lt.	Inlet	Ty. B T. 3F.&G.																						1																										
5+13 Lt.	Catch Basin	Ty. C / 2250 Inlet																																															
5+13 Lt. - 5+13 Lt.	16"x1.6'	Special	0.3	1.6																																													
5+23 Lt. - 5+13 Lt.	16"x7.5'	Special	0.6	7.5																																													

STORM SEWER SCHEDULE

ROUTE	SECTION	COUNTY	TOTAL SHEETS	SHEET NUMBER
FAP 840 (ILL 50)	140 WR & RS-5	KANKAKEE	134	16
F.H.W.A. REG. 4	ILLINOIS	PROJECT		

STORM SEWER SCHEDULE

Station	Type	Description	Trench Backfill	Storm Sewer Spec 16"	Type 1 8"	Type 1 12"	Type 1 18"	Type 1 24"	Type 1 30"	Type 1 36"	Type 1 with Rubber Gasket 12"	Type 1 with Rubber Gasket 24"	Type 1 with Rubber Gasket 30"	Type 1 S60R38	Type 1 S30R19	Pipe Culverts Ty.1 RCP 24"	Pipe Culverts Ty.1 RCP 48"	RC Pipe Tees 12" Pipe 12R	RC Pipe Tees 18" Pipe 12R	RC Pipe Tees 24" Pipe 12R	Inlets Ty.3F&G. Ty.A	Inlets Ty.3F&G. Ty.B	Inlets To Be Reconst. w/T.I.F.OL	Manholes 4' Ty.A T.I.F. OL	Manholes 4' Ty.A T.I.F. CL	Manholes 4' Ty.A T.5F OL	Manholes 4' Ty.A T.5F CL	Manholes 4' Ty.A T.3F&G	Manholes 5' Ty.A T.I.F. OL	Manholes 5' Ty.A T.I.F. CL	Manholes 5' Ty.A T.5F OL	Manholes 5' Ty.A T.5F CL	Manholes 6' Ty.A T.I.F. OL	Manholes 6' Ty.A T.I.F. CL	Manholes 6' Ty.A T.5F OL	Manholes 6' Ty.A T.5F CL	Manholes To Be Adjusted w/T.I.F.CL	Catch Basins Type C T.8 Grate	Catch Basins Type C 2250 Inlet	End Sections PRC Flared 12"	End Sections PRC Flared 18"	End Sections PRC Flared 24"	End Sections PRC Flared 36"	End Sections PRC Flared EL EQRS 24"	End Sections PRC Flared EL EQRS 48"	Grating For Conc. Flared End Sections 24"	Grating For Conc. Flared End Sections 36"	Grating For Conc. Flared End Sections 24" Eqv.	Grating For Conc. Flared End Sections 48" Eqv.
5+13 Lt. - 5+13 Rt.	12"x61.6'	Ty.1	7.7			61.6																																									
5+23 Rt.	Inlet	Ty.A T.3F.&G.																			1																										
5+13 Rt.	Inlet	Ty.B T.3F.&G.																				1																									
5+23 Rt. - 5+13 Rt.	12"x7.5'	Ty.1	0.6			7.5																																									
5+13 Rt. - 5+18 Rt.	12"x3'	Ty.1	0.5			3																																									
5+18 Rt. - 6+08 Rt.	36"x85'	Ty.1								85																																					
6+08 Rt.	Manhole	6' Ty.A T.5F. OL.	0.5																																	1											
6+08 Lt.	Inlet	Ty.A T.3F.&G.																			1																										
6+08 Rt.	Inlet	Ty.B T.3F.&G.																				1																									
6+08 Lt. - 6+08 Rt.	12"x61.6'	Ty.1	5.9			61.6																																									
6+08 Rt. - 6+08 Rt.	12"x2'	Ty.1	0.3			2																																									
6+08 Rt. - 6+08 Rt.	36"x3'	Ty.1								3																																	1		1		
8+30 Lt.	Inlet	Ty.A T.3F.&G.																			1																										
8+30 Rt.	Inlet	Ty.B T.3F.&G.																				1																									
8+30 Rt.	Manhole	4' Ty.A.T.I.F. OL																						1																							
8+30 Lt. - 8+30 Rt.	12"x61.6'	Ty.1	5.9			61.6																																									
8+30 Rt. - 8+30 Rt.	12"x6.2'	Ty.1	0.3			6.2																																									
9+26 Rt.	Inlet	Ty.A T.3F.&G.																			1																										
9+26 Rt. - 8+30 Rt.	12"x93.5'	Ty.1	13.2			93.5																																									
8+30 Rt. - 6+08 Rt.	12"x217.5'	Ty.1	9.0			217.5																																									
Sub Total Run #1			122.0	42.6	-	565.8	—	129.7	131	243	37.0	160	45	—	—	—	—	—	—	—	—	8	4	—	1	—	—	1	—	—	—	—	3	—	—	—	3	—	—	1	—	—	3	1	—	—	—	1	—	—
Run #2																																																
10+90 Rt.	Manhole	4' Ty.A T.I.F. CL.																								1																						
10+90 Rt.	Inlet	Ty.A T.3F.&G.																			1																										
10+90 Rt. - 10+90 Rt.	12"x3.1	Ty.1	0.2			3.1																																									
10+90 Rt. - 11+85 Rt.	12"x89.5'	Ty.1	5.9			89.5																																									
11+85 Rt.	RC Pipe Tee	12"P 12"R																1																													
11+85 Rt. - 13+18 Rt.	12"x127.2	Ty.1	7.5			127.2																																									
11+85 Lt.	Inlet	Ty.A T.3F.&G.																			1																										
11+85 Lt. - 11+85 Rt.	12"x67.5	Ty.1	10.0			67.5																																									
13+18 Lt.	Catch Basin	Ty.C / 2250 Inlet																																						1								
13+18 Lt.	Inlet	Ty.B T.3F.&G.																				1																									
13+18 Lt. - 13+18 Lt.	16"x1.6'	Special	0.3	1.6																																											
13+18 Rt. - 13+18 Rt.	12"x68.0	Ty.1	8.6			68.0																																									

STORM SEWER SCHEDULE

ROUTE	SECTION	COUNTY	TOTAL SHEETS	SHEET NO.
FAP 820 (ILL. 50)	1-20 WR & 85-5	KANKAKEE	134	17
F.A.P. RES. 4	ILLINOIS	PROJECT		

STORM SEWER SCHEDULE

Station	Type	Description	Trench Backfill	Storm Sewer: Spec 16"	Type 1: 8"	Type 1: 12"	Type 1: 18"	Type 1: 24"	Type 1: 30"	Type 1: 36"	Type 1 with Rubber Gasket: 12"	Type 1 with Rubber Gasket: 24"	Type 1 with Rubber Gasket: 30"	Type 1: S60R38	Type 1: S30R19	Pipe Culverts: Ty. 1 RCCP 24"	Pipe Culverts: Ty. 1 RC-E Bevel End Sections 48"	RC Pipe Tees: 12" Pipe 12R	RC Pipe Tees: 12" Pipe	RC Pipe Tees: 18" Pipe 12R	RC Pipe Tees: 18" Pipe	RC Pipe Tees: 24" Pipe 12R	RC Pipe Tees: 24" Pipe	Inlets: Ty. 3 F.&G. Ty. A	Inlets: Ty. 3 F.&G. Ty. B	Inlets: To Be Reconst. W/T.I.F. OL	Manholes: 4' Ty. A T.I.F. OL	Manholes: 4' Ty. A T.I.F. CL	Manholes: 4' Ty. A T.S.F. OL	Manholes: 4' Ty. A T.S.F. CL	Manholes: 4' Ty. A 3 F.&G.	Manholes: 5' Ty. A T.I.F. OL	Manholes: 5' Ty. A T.I.F. CL	Manholes: 5' Ty. A T.S.F. OL	Manholes: 5' Ty. A T.S.F. CL	Manholes: 6' Ty. A T.I.F. OL	Manholes: 6' Ty. A T.I.F. CL	Manholes: 6' Ty. A T.S.F. OL	Manholes: 6' Ty. A T.S.F. CL	Manholes: To Be Adjusted W/T.I.F.CL	Catch Basins: Type C T.B. Grate	Catch Basins: Type C 2250 Inlet	End Sections: PRC Flared 12"	End Sections: PRC Flared 18"	End Sections: PRC Flared 24"	End Sections: PRC Flared 36"	End Sections: PRC Flare EL EQRS 24"	End Sections: PRC Flare EL EQRS 48"	Grating For Conc. Flare End Sections: 24"	Grating For Conc. Flare End Sections: 36"	Grating For Conc. Flare End Sections: 24" Eqv.	Grating For Conc. Flare End Sections: 48" Eqv.
13+18 Rt.	Manhole	4' Ty. A T.I.F. CL.																										1																						
13+40 Rt.	Inlet	Ty. A 1. 3 F.&G.																						1																										
13+40 Rt. - 13+18 Rt.	12" x 19.6'	Ty. 1	1.2			19.6																																												
13+18 Rt. - 14+64 Rt.	18" x 140.5'	Ty. 1	3.4				140.5																																											
14+64 Rt.	Manhole	6' Ty. A T.I.F. CL.	2.3																																	1														
14+82 Lt.	Catch Basin	Ty. C / 2250 Inlet																																								1								
14+92 Lt.	Inlet	Ty. A T. 3 F.&G.																						1																										
14+82 Lt.	Inlet	Ty. B T. 3 F.&G.																							1																										
14+92 Lt. - 14+82 Lt.	16" x 7.5'	Special	0.6	7.5																																														
14+82 Lt. - 14+82 Lt.	16" x 1.6'	Special	0.1	1.6																																														
14+82 Lt. - 14+82 Rt.	12" x 61.6'	Ty. 1	8.9			61.6																																												
14+82 Rt.	Inlet	Ty. B T. 3 F.&G.																							1																										
14+92 Rt.	Inlet	Ty. A T. 3 F.&G																						1																										
14+92 Rt. - 14+82 Rt.	12" x 7.5'	Ty. 1	0.7			7.5																																												
14+82 Rt. - 14+64 Rt.	12" x 14.2	Ty. 1	2.2			14.2																																												
14+64 Rt.	PRC End Sec.	48" EL. EQRS																																												1				1
16+45 Rt. - 14+64 Rt.	S60R38 x 175	Ty. 1 RCEP	104.9											175.0																																				
16+45 Rt.	Manhole	6' Ty. A T.I.F. CL.	1.9																																	1														
16+45 Lt.	Inlet	Ty. A T. 3 F.&G.																						1																										
16+45 Rt.	Inlet	Ty. B T. 3 F.&G.																							1																										
16+45 Lt. - 16+45 Rt.	12" x 61.6'	Ty. 1	9.1			61.6																																												
16+45 Rt. - 16+45 Rt.	12" x 1.2	Ty. 1	0.2			1.2																																												
17+81 Rt. - 16+45 Rt.	S60R38 x 130	Ty. 1 RCEP	43.8											130																																				
17+81 Rt.	Manhole	6' Ty. A T.I.F. CL.																																		1														
17+81 Lt. - 17+81 Rt.	48" EQRS	RC-E Ty. 1	20.3														74																													1				1
18+43 Rt. - 17+81 Rt.	24" x 55.3'	Ty. 1	11.8					55.3																																										
18+43 Lt.	Catch Basin	Ty. C / 2250 Inlet																																								1								
18+43 Lt.	Inlet	Ty. B T. 3 F.&G.																							1																										
18+43 Lt. - 18+43 Lt.	16" x 1.6'	Special	0.2	1.6																																														
18+43 Lt. - 18+43 Rt.	12" x 61.6'	Ty. 1	9.3			61.6																																												
18+43 Rt.	Inlet	Ty. B T. 3 F.&G.																							1																										
18+43 Rt. - 18+43 Rt.	12" x 2.4'	Ty. 1	3.3			2.4																																												
18+43 Rt.	RC Pipe Tee	24" P 12" R	1.5																			1																												
20+04 Rt. - 18+43 Rt.	24" x 155.4'	Ty. 1	31.8					155.4																																										
20+04 Rt.	Manhole	4' Ty. A T.I.F. CL.	0.3																									1																						

STORM SEWER SCHEDULE

STORM SEWER SCHEDULE

Station	Type	Description	Trench Backfill	Storm Sewer Spec. 16"	Storm Sewer Type 1 8"	Storm Sewer Type 1 12"	Storm Sewer Type 1 18"	Storm Sewer Type 1 24"	Storm Sewer Type 1 30"	Storm Sewer Type 1 36"	Storm Sewer Type 1 with Rubber Gasket 12"	Storm Sewer Type 1 with Rubber Gasket 24"	Storm Sewer Type 1 with Rubber Gasket 30"	Storm Sewer Type 1 S60R38	Storm Sewer Type 1 S30R19	Pipe Culverts Ty. 1 RCCP 24"	Pipe Culverts Ty. 1 Sr-c Bore 48"	RC Pipe Tees 12" Pipe 12R	RC Pipe Tees 18" Pipe 12R	RC Pipe Tees 24" Pipe 12R	Inlets Ty. 3 F.&G. Ty. A	Inlets Ty. 3 F.&G. Ty. B	Inlets To Be Reconst. w/ T.I.F.OL	Manholes 4' Ty. A T.I.F. OL	Manholes 4' Ty. A T.I.F. CL	Manholes 4' Ty. A T.S.F. OL	Manholes 4' Ty. A T.S.F. CL	Manholes 4' Ty. A Ty. 3 F.&G.	Manholes 5' Ty. A T.I.F. OL	Manholes 5' Ty. A T.I.F. CL	Manholes 5' Ty. A T.S.F. OL	Manholes 5' Ty. A T.S.F. CL	Manholes 6' Ty. A T.I.F. OL	Manholes 6' Ty. A T.I.F. CL	Manholes 6' Ty. A T.S.F. OL	Manholes 6' Ty. A T.S.F. CL	Manholes To Be Adjusted w/ T.I.F.OL	Catch Basins Type C T. 8 Grate	Catch Basins Type C 2250 Inlet	End Sections PRC Flared 12"	End Sections PRC Flared 18"	End Sections PRC Flared 24"	End Sections PRC Flared 36"	End Sections PRC Flared 24"	End Sections PRC Flared 48"	Grating For Conc Flared End Sections 24"	Grating For Conc Flared End Sections 36"	Grating For Conc Flared End Sections 24" Erv.	Grating For Conc Flared End Sections 48" Erv.
20+04 Rt.	Catch Basin	Ty. C T. 8 Gr.																																				1										
20+04 Rt. - 20+04 Rt.	12" x 2.5'	Ty. 1				2.5																																										
20+71 Rt. - 20+04 Rt.	18" x 61'	Ty. 1	7.5				61																																									
20+71 Rt.	RC Pipe Tee	18" P 12" R																	1																													
20+71 Lt.	Catch Basin	Ty. C / 2250 Inlet																																					1									
20+71 Lt.	Inlet	Ty. B T. 3 F.&G.																				1																										
20+71 Lt. - 20+71 Lt.	16" x 1.6'	Special	0.2																																													
20+71 Lt. - 20+71 Rt.	12" x 61.6'	Ty. 1	7.5			61.6																																										
20+71 Rt. - 20+71 Rt	12" x 1'	Ty. 1	0.2			1.0																																										
20+71 Rt.	Inlet	Ty. B T. 3 F.&G.																				1																										
22+85 Rt. - 20+71 Rt.	18" x 208'	Ty. 1	4.8				208																																									
22+85 Rt.	Inlet	Ty. A T. 3 F.&G.																			1																											
22+85 Rt.	Manhole	4' Ty. A T.I.F. CL																							1																							
22+85 Rt.	Catch Basin	Ty. C T. 8 Gr.																																				1										
22+85 Rt. - 22+85 Rt.	12" x 2.5'	Ty. 1				2.5																																										
22+85 Rt. - 22+85 Rt.	12" x 1.7'	Ty. 1	0.2			1.7																																										
23+23 Rt. - 22+85 Rt.	18" x 32'	Ty. 1					32																																									
23+23 Rt. -	Rc Pipe Tee	18" P 12" R																	1																													
23+26 Lt.	Catch Basin	Ty. C / 2250 Inlet																																					1									
23+23 Lt.	Inlet	Ty. B T. 3 F.&G.																				1																										
23+26 Lt. - 23+23 Lt.	16" x 2.5'	Special	0.2	2.5																																												
23+23 Lt. - 23+23 Rt.	12" x 66.6'	Ty. 1	8.5			66.6																																										
24+47 Rt. - 23+23 Rt.	18" x 118.5'	Ty. 1					118.5																																									
24+47 Rt.	Manhole	4' Ty. A T.I.F. OL																								1																						
25+08 Lt.	Catch Basin	Ty. C / 2250 Inlet																																					1									
25+08 Lt. - 24+47 Lt.	16" x 58.6'	Special	3.0	58.6																																												
24+47 Lt.	Inlet	Ty. B T. 3 F.&G.																				1																										
24+47 Lt. - 24+47 Rt.	12" x 61.6'	Ty. 1	9.2			61.6																																										
24+47 Rt.	Inlet	Ty. B T. 3 F.&G.																				1																										
24+47 Rt. - 24+47 Rt.	12" x 6.5'	Ty. 1	0.2			6.5																																										
27+03 Rt. - 24+47 Rt.	12" x 252'	Ty. 1	3.4			252																																										
27+03 Rt.	Manhole	4' Ty. A T.I.F. OL																								1																						
27+06 Lt.	Catch Basin	Ty. C / 2250 Inlet																																					1									
27+03 Lt.	Inlet	Ty. B T. 3 F.&G.																				1																										
28+45 Lt.	Inlet	Ty. A T. 3 F.&G.																			1																											

STORM SEWER SCHEDULE

STORM SEWER SCHEDULE

Station	Type	Description	Trench Backfill	Storm Sewer: Spec. 16"	Type I: 8"	Type I: 12"	Type I: 18"	Type I: 24"	Type I: 30"	Type I: 36"	Type I with Rubber Gasket: 12"	Type I with Rubber Gasket: 24"	Type I with Rubber Gasket: 30"	Type I: S60R38	Type I: S30R19	Pipe Culverts: Ty. I RCP 24"	Pipe Culverts: Ty. I RC-E Flared 48"	RC Pipe Tees: 12" Pipe 12R	RC Pipe Tees: 18" Pipe 12R	RC Pipe Tees: 24" Pipe 12R	Inlets: Ty. 3F&G. Ty. A	Inlets: Ty. 3F&G. Ty. B	Inlets: To Be Reconst. W/T.I.F.CL.	Manholes: 4' Ty. A T.I.F. CL	Manholes: 4' Ty. A T.I.F. CL	Manholes: 4' Ty. A T.3F	Manholes: 4' Ty. A	Manholes: 5' Ty. A T.I.F.	Manholes: 5' Ty. A T.3F.	Manholes: 6' Ty. A T.I.F.	Manholes: 6' Ty. A T.3F	Manholes: To Be Adjusted W/T.I.F.CL.	Catch Basins: Type C T.B. Grate	Catch Basins: 2250 Inlet	End Sections: PRC Flared 12"	End Sections: PRC Flared 18"	End Sections: PRC Flared 24"	End Sections: PRC Flared 36"	End Sections: PRC Flared 48"	Grating for Conc. Flared End Sections: 24	Grating for Conc. Flared End Sections: 36"	Grating for Conc. Flared End Sections: 24 Esc.	Grating for Conc. Flared End Sections: 48 Esc.
																								OL	CL	OL	CL	Ty. 3F&G	OL	CL	OL	CL	OL	CL	OL	CL								
28+45 LT.- 27+06 LT.	16"x 137.7'	Special	9.0	137.7																																						
27+06 LT.- 27+03 LT.	16"x 2.5'	Special	0.2	2.5																																						
27+03 LT.- 27+03 RT.	12"x 61.6'	Ty. I	8.2			61.6																																				
27+03 RT.	Inlet	Ty. B T. 3F.&G.																				1																				
27+03 RT.- 27+03 RT.	12"x 6.2	Ty. I	0.2			6.2																																				
Sub Total Run #2			350.0	213.6	–	1109.0	560.0	210.7	–	–	–	–	–	305.0	–	–	71	1	–	2	–	1	–	8	15	–	2	4	–	–	–	–	–	–	–	–	3	–	–	–	2	7	–	–	–	–	–	2	–	–	–	2
Run #3																																										
(N.450"Pb) 29+95 LT.- 3+10 RT.	24"x 261.5'	Ty. I	1.5					261.5																																		
29+95 LT.	Manhole	4' Ty. A T.3F.&G.	2.3																									1														
29+95 RT.- 29+95 LT.	24"x 80'	Ty. I R.G.	72.8									80.0																														
29+31.8 RT.- 29+95 RT.	12"x 60.1'	Ty. I	8.5			60.1																																				
29+31.8 RT.	Inlet	Ty. A T.3F.&G.																			1																					
29+95 RT.	Manhole	5' Ty. A T.I.F. CL.																													1											
31+53 RT.- 29+95 RT.	24"x 153'	Ty. I						153																																		
31+53 RT.	Manhole	4' Ty. A T.I.F. CL.																							1																	
33+10.8 RT.- 31+53 RT.	24"x 153.3'	Ty. I						153.3																																		
33+10.8 RT.- 33+10.8 RT.	12"x 3'	Ty. I	0.2			3.0																																				
32+86.4 RT.- 33+10.8 RT.	12"x 18.5'	Ty. I	2.2			18.5																																				
33+31.8 RT.- 33+10.8 RT.	12"x 18.5'	Ty. I	2.2			18.5																																				
32+86.4 RT.	Inlet	Ty. A T. 3F.&G.																			1																					
33+10.8 RT.	Inlet	Ty. B T. 3F.&G.																				1																				
33+31.8 RT.	Inlet	Ty. A T. 3F.&G.																			1																					
33+10.8 LT.- 33+10.8 RT.	12"x 61.6'	Ty. I	14.8			61.6																																				
33+10.8 LT.- 33+10.8 LT.	16"x 1.2'	Special	0.1	1.2																																						
32+95.8 LT.- 33+10.8 LT.	16"x 12.5'	Special	0.8	12.5																																						
33+25.8 LT.- 33+10.8 LT.	16"x 12.5'	Special	0.8	12.5																																						
32+95.8 LT.-	Inlet	Ty. A T. 3F.&G.																			1																					
33+10.8 LT.	Inlet	Ty. B T. 3F.&G.																				1																				
33+25.0 LT.	Inlet	Ty. A T. 3F.&G.																			1																					
33+10.8 LT.	Catch Basin	Ty. C/2250 Inlet																																						1		
33+10.8 RT.	Manhole	5' Ty. A T.I.F. CL.																													1											
34+74 RT.- 33+10.8 RT.	24"x 158.8	Ty. I						158.8																																		
34+74 RT.	Manhole	4' Ty. A T.I.F. CL.																							1																	
36+78 RT.- 34+74 RT.	24"x 200'	Ty. I						200																																		

STORM SEWER SCHEDULE

STORM SEWER SCHEDULE

Station	Type	Description	Trench Backfill	Storm Sewer: Spec. 16"	Type I: 8"	Type I: 12"	Type I: 18"	Type I: 24"	Type I: 30"	Type I: 36"	Type I with Rubber Gasket: 12"	Type I with Rubber Gasket: 24"	Type I with Rubber Gasket: 30"	Type I: 560R38	Type I: 530×19	Pipe Culverts: Ty. I RCCP 24"	Pipe Culverts: Ty. I RCCP 48"	RC Pipe Tees: 12" Pipe 12R	RC Pipe Tees: 18" Pipe 12R	RC Pipe Tees: 24" Pipe 12R	Inlets: Ty. 3 F.&G. Ty. A	Inlets: Ty. 3 F.&G. Ty. B	Inlets: To Be Reconst. w/T.I.F.CL	Manholes: 4' Ty. A T.I.F. CL	Manholes: 4' Ty. A T.I.F. CL	Manholes: 4' Ty. A T.5 F.	Manholes: 4' Ty. A	Manholes: 5' Ty. A T.I.F. CL	Manholes: 5' Ty. A T.I.F. CL	Manholes: 5' Ty. A T.5 F. CL	Manholes: 6' Ty. A T.I.F. CL	Manholes: 6' Ty. A T.I.F. CL	Manholes: 6' Ty. A T.5 F. CL	Manholes: To Be Adjusted w/T.I.F.CL	Catch Basins: Type C T.8 Grate	Catch Basins: Type C 2250 Inlet	End Sections: PRC Flared 12"	End Sections: PRC Flared 18"	End Sections: PRC Flared 24"	End Sections: PRC Flared 36"	End Sections: PRC Flared El. Ex. 24"	End Sections: End Sections 48"	End Sections: End Sections 24	End Sections: End Sections 36	End Sections: End Sections 24 Ex.	End Sections: End Sections 48 Ex.
36+50.8 Rt.-36+78 Rt.	12"×24'	Ty. I	4.7			24																																							
36+40.8 Rt.-36+50.8 Rt.	12"×7.5'	Ty. I	1.1			7.5																																							
36+50.8 Rt.	Inlet	Ty. B T.3 F.&G.																				1																							
36+40.8 Rt.	Inlet	Ty. A T.3 F.&G.																			1																								
36+50.8 Lt.-36+50.8 Rt.	12"×61.6'	Ty. I	8.5			61.6																																							
36+40.8 Lt.-36+50.8 Lt.	16"×7.5'	Special	0.6	7.5																																									
36+50.8 Lt.	Inlet	Ty. B T.3 F.&G.																				1																							
36+40.8 Lt.	Inlet	Ty. A T.3 F.&G.																			1																								
36+78 Rt.-36+78 Rt.	12"×1'	Ty. I				1.0																																							
36+78 Rt.	Catch Basin	Ty. C T.8 Gr.																																	1										
36+78 Rt.	Manhole	5' Ty. A T.I.F. CL.	0.5																									1																	
39+28 Rt.-36+78 Rt.	18"×246'	Ty. I					246																																						
39+28 Rt.-39+28 Rt.	12"×1.5'	Ty. I	0.2			1.5																																							
39+43 Rt.-39+28 Rt.	12"×12.5'	Ty. I	1.6			12.5																																							
39+28 Rt.	Inlet	Ty. B T.3 F.&G.																				1																							
39+43 Rt.	Inlet	Ty. A T.3 F.&G.																			1																								
39+28 Lt.-39+28 Rt.	12"×61.6'	Ty. I	8.8			61.6																																							
39+00 Lt.-39+28 Lt.	16"×25.8'	Special	2.9	25.8																																									
39+43 Lt.-39+28 Lt.	16"×12.5'	Special	0.8	12.5																																									
39+28 Lt.	Inlet	Ty. B T.3 F.&G.																				1																							
39+43 Lt.	Inlet	Ty. A T.3 F.&G.																			1																								
39+00 Lt.	Catch Basin	Ty. C/2250 Inlet																																		1									
39+28 Rt.	Manhole	4' Ty. A T.I.F. CL.	0.3																					1																					
41+09 Rt.-39+28 Rt.	18"×177'	Ty. I					177																																						
41+09 Rt.-41+09 Rt.	12"×1.7'	Ty. I				1.7																																							
41+09 Rt.-41+09 Rt.	12"×1.5'	Ty. I	0.2			1.5																																							
41+09 Rt.	Catch Basin	Ty. C T.8 Gr.																																	1										
41+09 Rt.	Manhole	4' Ty. A T.I.F. CL.	0.3																					1																					
41+09 Rt.	Inlet	Ty. B T.3 F.&G.																				1																							
41+09 Lt.-41+09 Rt.	12"×61.6'	Ty. I	6.7			61.6																																							
41+09 Lt.	Inlet	Ty. B T.3 F.&G.																				1																							
41+65 Lt.-41+09 Lt.	16"×53.6'	Special	7.3	53.6																																									
41+65 Lt.	Catch Basin	Ty. C/2250 Inlet																																		1									
Sub Total Run #3			154.5	125.6	–	396.2	423	926.6	–	–	–	80.0	–	–	–	–	–	–	–	–	9	8	–	–	4	–	–	1	–	2	–	–	–	–	–	–	2	3	–	–	1	–	–	–	1	–	–	–

STORM SEWER SCHEDULE

STORM SEWER SCHEDULE

Station	Type	Description	Trench Backfill	Storm Sewer Spec. 16"	Type 1 8"	Type 1 12"	Type 1 18"	Type 1 24"	Type 1 30"	Type 1 36"	Type 1 with Rubber Gasket 12"	Type 1 with Rubber Gasket 24"	Type 1 with Rubber Gasket 30"	Type 1 S60R38	Type 1 S30R19	Pipe Culverts Ty.1 RCCP 24"	Pipe Culverts Ty.1 RCCP 48"	RC Pipe Tees 12" Pipe 12R	RC Pipe Tees 12" Pipe	RC Pipe Tees 18" Pipe 12R	RC Pipe Tees 18" Pipe	RC Pipe Tees 24" Pipe 12R	RC Pipe Tees 24" Pipe	Inlets Ty.3F&G Ty.A	Inlets Ty.3F&G Ty.B	Inlets To Be Reconst. w/T.I.F.OL	Manholes 4' Ty.A.T.I.F. OL	Manholes 4' Ty.A.T.I.F. CL	Manholes 4' Ty.A.T.S.F. OL	Manholes 4' Ty.A.T.S.F. CL	Manholes 4' Ty.A Ty.3F&G	Manholes 5' Ty.A.T.I.F. OL	Manholes 5' Ty.A.T.I.F. CL	Manholes 5' Ty.A.T.S.F. OL	Manholes 5' Ty.A.T.S.F. CL	Manholes 6' Ty.A.T.I.F. OL	Manholes 6' Ty.A.T.I.F. CL	Manholes 6' Ty.A.T.S.F. OL	Manholes 6' Ty.A.T.S.F. CL	Manholes To Be Adjusted w/T.I.F.CL	Catch Basins Type C T.B. GRATE	Catch Basins Type C 2250 INLET	End Sections PRC Flared 12"	End Sections PRC Flared 18"	End Sections PRC Flared 24"	End Sections PRC Flared 36"	End Sections PRC Flare EL. ESES 24"	End Sections PRC Flare EL. ESES 48"	Grating For Conc. Flare End Sections 24"	Grating For Conc. Flare End Sections 36"	Grating For Conc. Flare End Sections 24" Ex.	Grating For Conc. Flare End Sections 48" Ex.
RUN #4																																																			
44+53.8 RT.	INLET	TY.A.T.3F.&G.																						1																											
44+68.8 RT.	INLET	TY.A.T.3F.&G.																						1																											
44+83.8 RT.	INLET	TY.A.T.3F.&G.																						1																											
44+68 RT.	MANHOLE	4' TY.A.T.I.F. CL.	0.2																									1																							
44+53.8 RT.-44+68 RT.	12"x 12'	TY.1	0.6			12.0																																													
44+68.8 RT.-44+68 RT.	12"x 1.7'	TY.1	0.1			1.7																																													
44+83.8 RT.-44+68 RT.	12"x 13.5'	TY.1	0.7			13.5																																													
44+68 RT.-45+83.8 RT.	12"x 111.8'	TY.1				111.8																																													
45+83.8 RT.	MANHOLE	4' TY.A.T.I.F. CL.	0.2																									1																							
45+83.8 LT.	CATCH BASIN	TY.C T.B GR.																																																	
45+83.8 LT.-45+83.8 LT.	12"x 68.2'	TY.1	9.7			68.2																																													
45+83.8 RT.	INLET	TY.B T.3F.&G.																							1																											
45+83.8 RT.-45+83.8 RT.	12"x 1.5'	TY.1	0.2			1.5																																													
45+83.8 RT.-45+83.8 RT.	8"x 2'	TY.1			2.0																																														
45+83.8 RT.	CATCH BASIN	TY.C T.B GR.																																																	
45+83.8 RT.-47+81.1 RT.	18"x 193.5'	TY.1					193.5																																												
47+81.1 RT.	MANHOLE	4' TY.A.T.I.F. CL.	0.6																									1																							
47+81.1 RT.	INLET	TY.A.T.3F.&G.																						1																											
47+81.1 RT.-47+81.1 RT.	12"x 2'	TY.1	0.2			2.0																																													
47+81.1 RT.-48+81.1 RT.	18"x 94.5'	TY.1					94.5																																												
48+81.1 RT.	INLET	TY.A.T.3F.&G.																						1																											
48+81.1 RT.	RC PIPE TEE	18"P 12"R																		1																															
48+81.1 RT.-48+81.1 RT.	12"x 1'	TY.1	0.2			1.0																																													
48+81.1 RT.-49+81.1 RT.	18"x 94.8'	TY.1					94.8																																												
49+81.1 RT.	MANHOLE	4' TY.A.T.I.F. CL.	0.5																									1																							
49+81.1 RT.	INLET	TY.A.T.3F.&G.																						1																											
49+81.1 RT.-49+81.1 RT.	12"x 2'	TY.1	0.2			2.0																																													
49+81.1 RT.-50+94.1 RT.	18"x 107.5'	TY.1					107.5																																												
50+94.1 RT.	INLET	TY.A.T.3F.&G.																						1																											
50+94.1 RT.	RC PIPE TEE	18"P 12"R																		1																															
50+94.1 RT.-50+94.1 RT.	12"x 1'	TY.1	0.2			1.0																																													
50+94.1 RT.-52+20.3 RT.	18"x 121.0'	TY.1					121.0																																												
52+20.3 RT.	MANHOLE	4' TY.A.T.I.F. CL.																										1																							

STORM SEWER SCHEDULE

ROUTE	SECTION	COUNTY	TOTAL SHEETS	SHEET NUMBER
FAP 840 (U.S. 50)	14-1 WR & 5 SECS.	KANKAKEE	134	22
F.A.P. RES. 4	ILLINOIS	PROJECT		

STORM SEWER SCHEDULE

Station	Type	Description	Trench Backfill	Storm Sewer: Spec. 16"	Type 1: 8"	Type 1: 12"	Type 1: 18"	Type 1: 24"	Type 1: 30"	Type 1: 36"	Type 1 with Rubber Gasket: 12"	Type 1 with Rubber Gasket: 24"	Type 1 with Rubber Gasket: 30"	Type 1: S60R38	Type 1: S30R19	Pipe Culverts: Ty.1 RCEP 24"	Pipe Culverts: Ty.1 RCEP 48"	RC Pipe Tees: 12" Pipe 12R	RC Pipe Tees: 18" Pipe 12R	RC Pipe Tees: 24" Pipe 12R	Inlets: Ty.3F&G Ty.A	Inlets: Ty.3F&G Ty.B	Inlets: To Be Reconst. w/T.I.F.CL	Manholes: 4' Ty.A T.I.F. OL	Manholes: 4' Ty.A T.I.F. CL	Manholes: 4' Ty.A T.5F OL	Manholes: 4' Ty.A T.5F CL	Manholes: 4' Ty.A Ty.3F&G	Manholes: 5' Ty.A T.I.F. OL	Manholes: 5' Ty.A T.I.F. CL	Manholes: 5' Ty.A T.5F OL	Manholes: 5' Ty.A T.5F CL	Manholes: 6' Ty.A T.I.F. OL	Manholes: 6' Ty.A T.I.F. CL	Manholes: 6' Ty.A T.5F OL	Manholes: 6' Ty.A T.5F CL	Manholes: To Be Adjusted w/T.I.F.CL	Catch Basins: Type C T.8 GRATE	Catch Basins: Type C 2250 INLET	End Sections: PRC Flared 12"	End Sections: PRC Flared 18"	End Sections: PRC Flared 24"	End Sections: PRC Flared 36"	End Sections: PRC Flared EL. EQ'ES 24"	End Sections: PRC Flared EL. EQ'ES 48"	Grating for Conc. Flared End Sections 24"	Grating for Conc. Flared End Sections 36"	Grating for Conc. Flared End Sections 24" Eqv.	Grating for Conc. Flared End Sections 48" Eqv.
52+20.3 Rt.	Inlet	Ty.A T.3 F&G.																			1																											
52+20.3 Rt.	Catch Basin	Ty.C T.8 Gr.																																					1									
52+20.3 Rt.-52+20.3 Rt.	12"x3.4'	Ty.1	0.2			3.4																																									
52+20.3 Rt.-52+20.3 Rt.	12"x1'	Ty.1				1.0																																									
52+20.3 Rt.-54+14 Rt.	18"x189.7'	Ty.1					189.7																																								
54+14 Rt.	Manhole	5' Ty.A T.1 F. CL.	0.3																										1																			
54+29 Rt.	Inlet	Ty.A T.3 F&G.																			1																											
54+14 Rt.	Catch Basin	Ty.C T.8 Gr.																																					1									
54+29 Rt.-54+14 Rt.	12"x12.6'	Ty.1	1.1			12.6																																									
54+14 Rt.-54+14 Rt.	12"x1'	Ty.1				1.0																																									
54+14 Rt.-55+78 Rt.	530'R19"x160'	Ty.1 RCEP	26.7												160																																	
55+78 Rt.	Manhole	5' Ty.A T.5F. CL.																														1																
0+51 Rt. (Ind. Oaks Rd.)	Inlet	Ty.A T.3 F&G																			1																											
55+52.1 Lt.	Catchbasin	Ty.C/2250 Inlet																																						1								
0+51 Rt.-55+52.1 Lt.	16"x45.5'	Special	0.5	45.5																																											
55+52.1 Lt.	Inlet	Ty.B T.3 F&G																				1																										
55+52.1 Lt.-55+52.1 Lt.	16"x1.2'	Special	0.3	1.2																																											
55+52.1 Rt.	Inlet	Ty.B T.3 F&G																				1																										
55+52.1 Lt.-55+52.1 Rt.	18"x61.6'	Ty.1	19.5				61.6																																								
55+52.1 Rt.-55+78 Rt.	18"x24.2	Ty.1	7.7				24.2																																								
100+49.5 Rt. (St. Geo. Rd.)	Inlet	Ty.A T.3 F&G																			1																											
100+49.5 Rt.-55+78 Rt.	12"x38'	Ty.1	6.7			38.0																																									
58+08 Rt.	Manhole	5' Ty.A T.1 FCL																											1																			
55+78 Rt.-57+08 Rt.	530'R19"x130'	Ty.1 RCEP	14.2												130																																	
100+53 Lt. (St. Geo. Rd.)	Inlet	Ty.A T.3 F&G																			1																											
100+53 Lt.-57+08 Rt.	12"x32"	Ty.1	0.5			32.0																																									
58+78.6 Rt.	Manhole	4' Ty.A T.1 FCL																														1															
57+08 Rt.-58+78.6 Rt.	24"x167'	Ty.1						167																																							
58+78.6 Lt.	Inlet	Ty.A T.3 F&G																			1																											
58+78.6 Rt	Inlet	Ty.A T.3 F&G																				1																										
58+78.6 Lt.-58+78.6 Rt.	12"x60.3'	Ty.1	5.5			60.3																																									
58+78.6 Rt.-58+78.6 Rt.	12"x1'	Ty.1	0.2			1.0																																									
61+28.6 Rt.	Manhole	4' Ty.A T.1 FCL																														1															

STORM SEWER SCHEDULE

ROUTE	SECTION	COUNTY	TOTAL SHEETS	SHEET NUMBER
FAP 840 (I-80)	140WF & 140-4	KANKAKEE	134	23
F.H.W.A. REG. 5	ILLINOIS	PROJECT		

STORM SEWER SCHEDULE

Station	Type	Description	Trench Backfill	Storm Sewer: Spec 16"	Type 1: 8"	12"	18"	24"	30"	36"	Type 1 with Rubber Gasket: 12"	24"	30"	Type 1: S60R38	S30R19	Pipe Culverts: Ty. 1 RCP 24"	Ty. 1 RCP 48"	RC Pipe Tees: 12" Pipe 12R	18" Pipe 12R	24" Pipe 12R	Inlets: Ty. 3 F&G Ty. A	Ty. B	To Be Reconst. w/T.I.F.OL	Manholes: 4' Ty. A T.I.F. OL	CL	4' Ty. A T.S.F. OL	CL	4' Ty. A Ty. 3 F&G	5' Ty. A T.I.F. OL	CL	5' Ty. A T.S.F. OL	CL	6' Ty. A T.I.F. OL	CL	6' Ty. A T.S.F. OL	CL	To Be Adjusted w/T.I.F.OL	Catch Basins: Type C T.B.	2250 Grate Inlet	End Sections: PRC Flared 12"	18"	24"	36"	PRC Flare El. EQRS 24"	48"	Grating For Conc. Flared End Sections: 24"	36"	24" Eqv.	48" Eqv.
58+78.6 Rt.-61+28.6 Rt.	24"=246'	Ty. 1						246																																											
61+28.6 Lt.	Inlet	Ty. A T.3 F&G																			1																														
61+28.6 Lt.	Inlet	Ty. A T.3 F&G																				1																													
61+28.6 Lt.-61+28.6 Rt.	12"=52.3'	Ty. 1	3.0			52.3																																													
61+28.6 Rt.-61+28.6 Rt.	12"×1.0'	Ty. 1	0.2			1.0																																													
61+28.6 Rt.-62+50 Rt.	24"×114'	Ty. 1						114																																		1				1				
Sub Total Run #4			100.0	46.7	2.0	417.3	886.8	527.0	–	–	–	–	–	–	290	–	–	–	–	2	–	–	–	14	5	–	–	7	–	–	–	–	2	–	1	–	–	–	–	–	4	1	–	–	1	–	–	–	1	–	–	–
Sub Total Run #3			150.5	175.6	–	396.2	423	926.6	–	–	–	80.0	–	–	–	–	–	–	–	–	–	–	–	9	8	–	–	4	–	–	1	–	3	–	–	–	–	–	–	–	–	–	–	–	1	–	–	–	1	–	–	–
Sub Total Run #2			350.0	213.6	–	1094.4	560.0	210.7	–	–	–	–	–	305.0	–	–	74	1	–	2	–	1	–	8	13	–	2	4	–	–	–	–	–	–	–	–	3	–	–	–	2	7	–	–	–	–	–	2	–	–	–	2
Sub Total Run #1			122.0	42.6	–	565.8	–	129.7	131	243	37	160	45	–	–	–	–	–	–	–	–	–	–	8	4	–	1	–	–	1	–	–	–	–	3	–	–	–	3	–	–	1	–	–	3	1	–	–	3	1	–	–
Frontage Road			–	–	–	–	15	–	–	–	–	–	–	–	–	76	–	–	–	–	–	–	–	–	–	–	–	1	–	–	–	–	–	–	–	–	–	–	1	–	–	–	–	2	–	–	–	2	–	–	–
Grand Totals			722.5	428.5	2.	2488.7	1884.8	1794	131	243	37	240	45	305	290	76	74	1	–	4	–	1	–	39	30	–	3	16	–	1	1	–	5	–	4	–	3	–	3	1	8	12	–	–	7	1	–	2	7	1	–	2

STORM SEWER SCHEDULE

RTE	SECTION	COUNTY	TOTAL SHEETS	SHEET NO.
FAP 640 (ILL 50)	140 W&RS-5	KANKAKEE	124	24
FAIR. RES.-4	ILLINOIS	PROJECT		

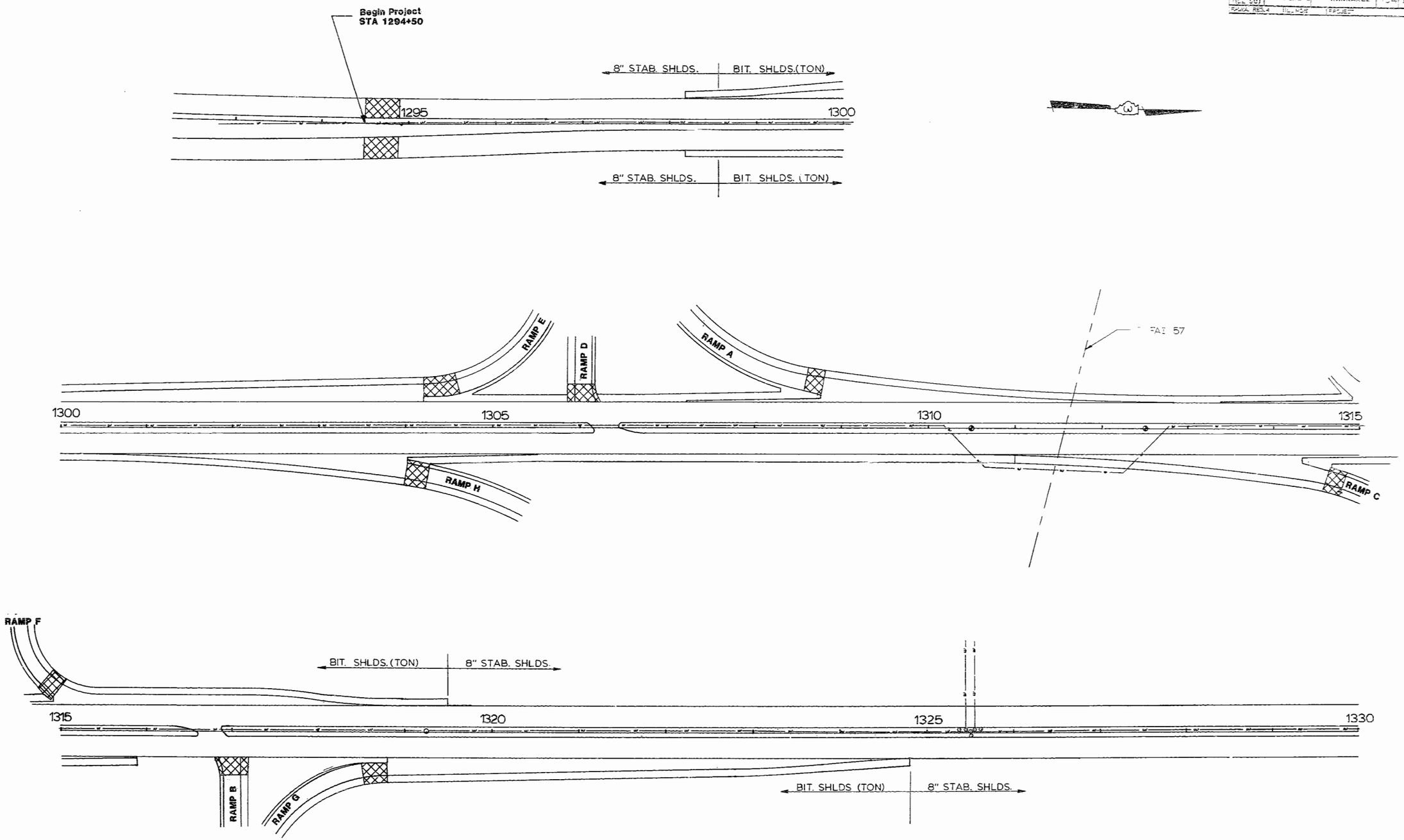

STA 1294+50 - STA 1330+00

FTE	SECTION	COUNTY	TOTAL SHEETS	SHEET NO.
FAP 540 (ILL 50)	K40 W&RS-8	KANKAKEE	134	82
FINAL REPT.	ILLINOIS	PROJECT		

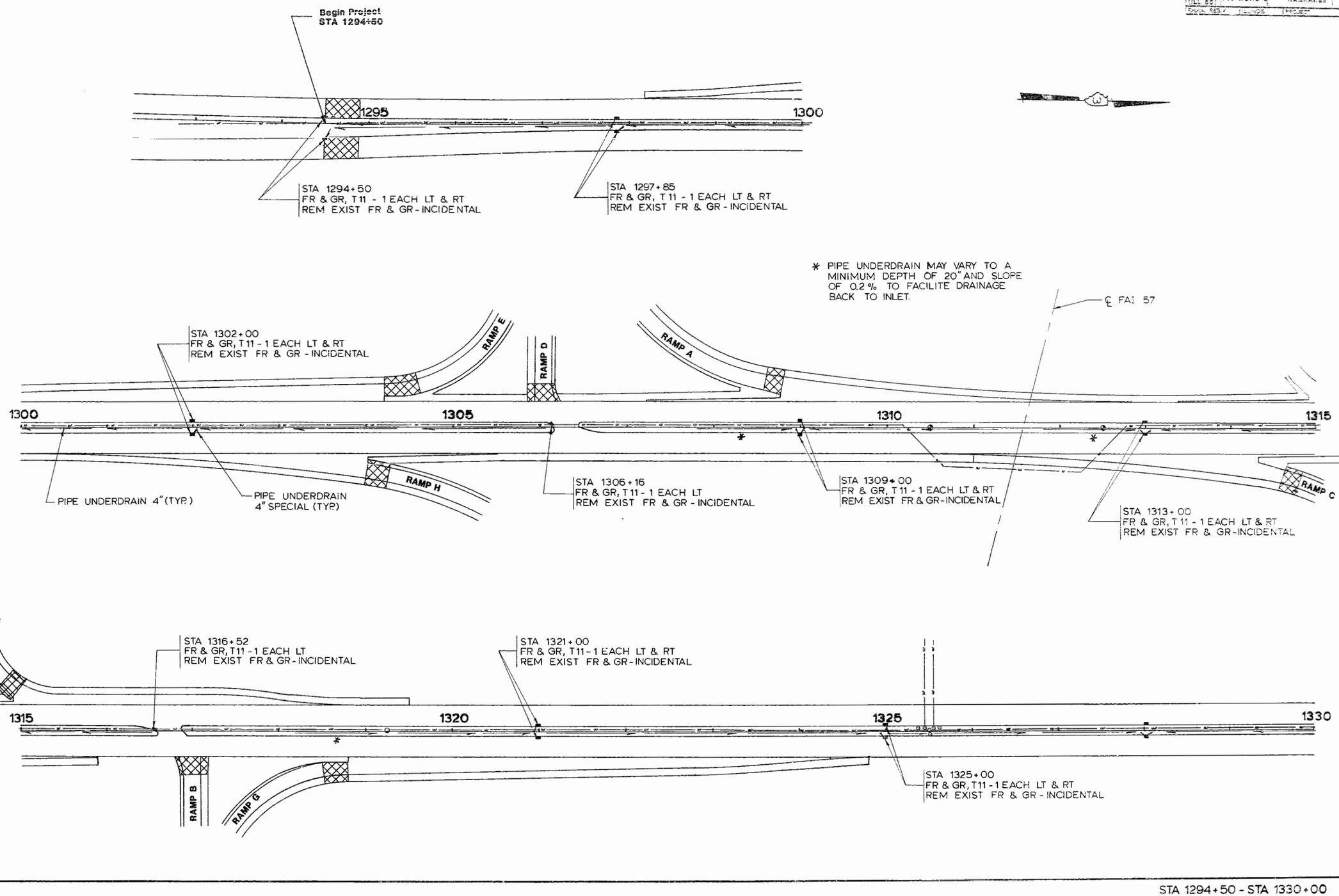

STA 1294+50 - STA 1330+00
DRAINAGE & STORM SEWER

RTE	SECTION	COUNTY	TOTAL SHEETS	SHEET NO.
FAP 840 (ILL 50)	440 W&RS-5	KANKAKEE	134	70
FEDERAL REG. 4	ILLINOIS	SEE PROJECT		

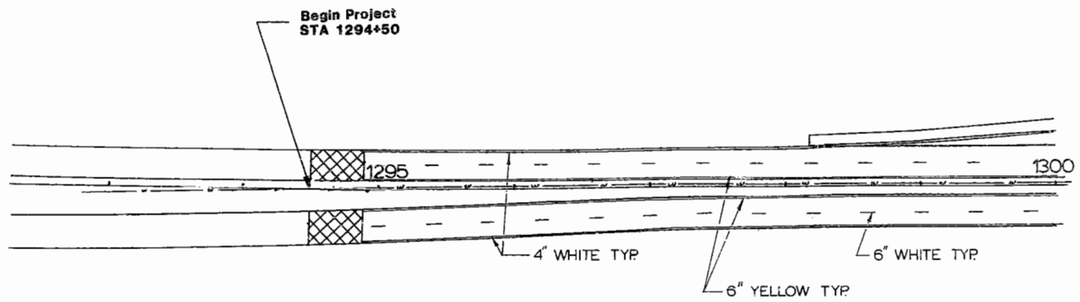

NOTE: SEE DETAIL SHEET FOR MARKING RAMP GORE AREAS

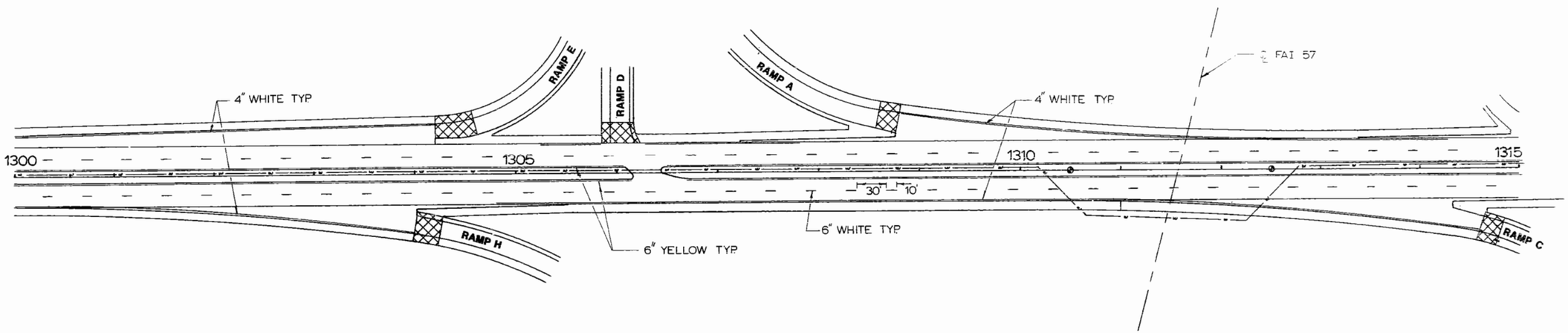

NOTE: SEE DETAIL SHEET FOR MARKING RAMP GORE AREAS

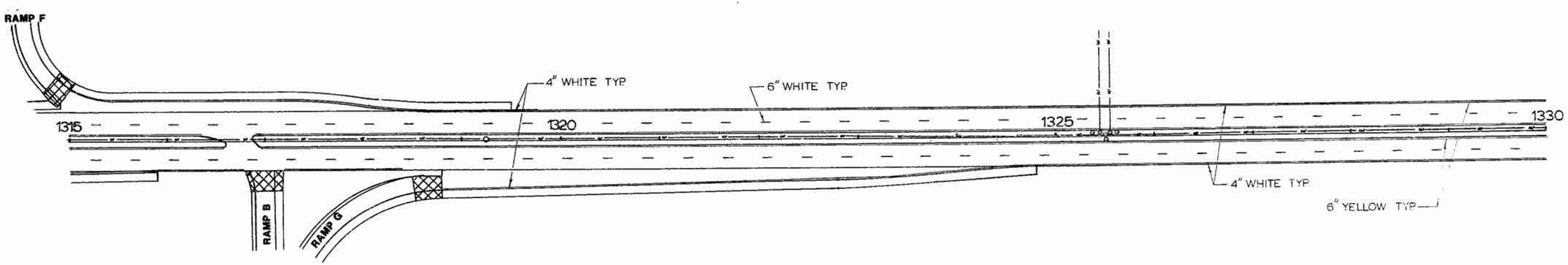

STA 1294+50 - STA 1330+00
PAVEMENT MARKING DETAILS

RTE	SECTION	COUNTY	TOTAL SHEETS	SHEET NO.
FAP 840 (ILL 50)	140 W&RS-B	KANKAKEE	124	80
FEDERAL REG. 4	ILLINOIS	PROJECT		

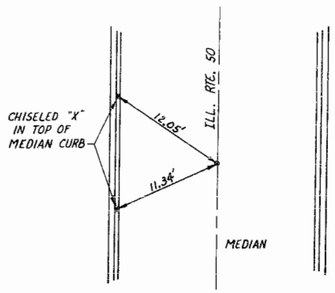

TIES TO P.O.T.
STA. 1330+00

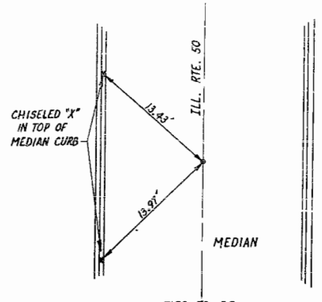

TIES TO P.I.
STA. 1333+12.32

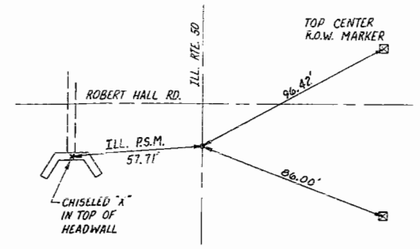

TIES TO P.O.T. STA. 1342+74.46 =
P.I. STA. 1342+73.44 ILL. P.S.M.

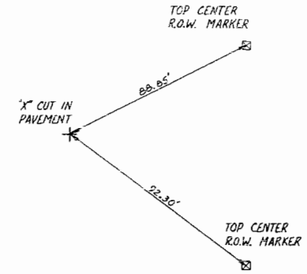

STA. 2+95.48
INTERSECTION OF ILL. RTE. 50
AND ROBERT HALL ROAD

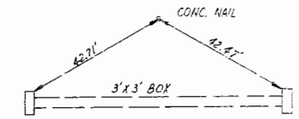

TIES TO P.I
STA. 16+99.55

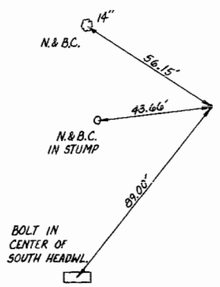

TIES TO P.I.
STA. 27+63.63

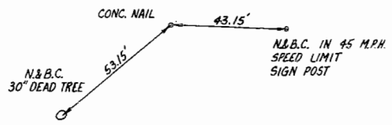

TIES AT P.C.
STA. 44+57.25

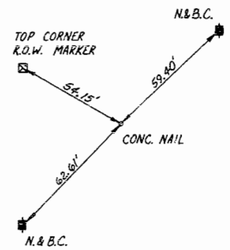

TIES TO P.O.T.
STA. 56+40.95

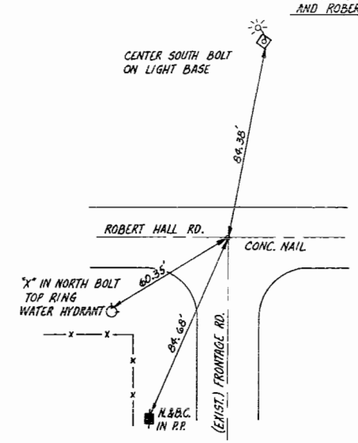

STA. 100+00 (EXISTING FRONTAGE ROAD) =
STA. 9+47.59

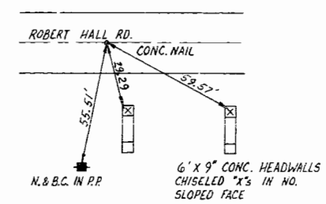

STA. 5+50

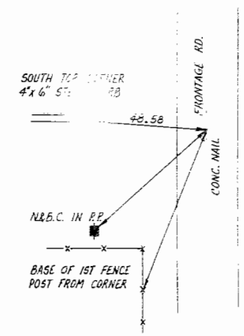

STA. 105+00 (EXISTING FRONTAGE ROAD) =
STA. 205+29.68 (PROPOSED FRONTAGE ROAD)

TIE POINTS

RTE	SECTION	COUNTY	TOTAL SHEET NO.	SHEET NO.
FAP 640 (ILL 50)	140 W&RS-5	KANKAKEE	134	87
RURAL REG. 4	ILLINOIS	PROJECT		

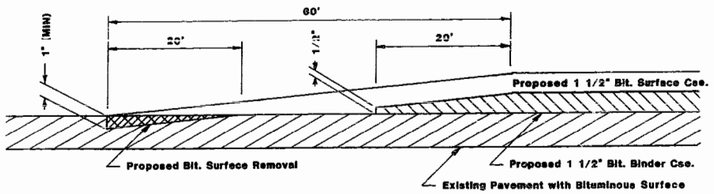

THICKNESS TAPERS (SIDEROADS)

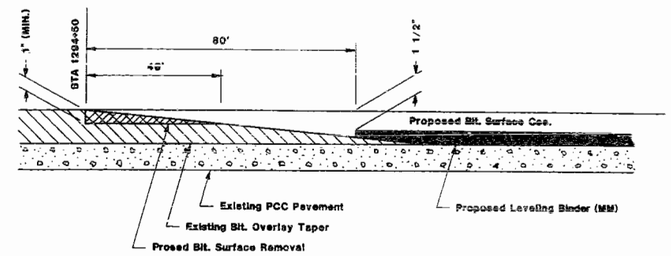

BEGINING THICKNESS TAPER

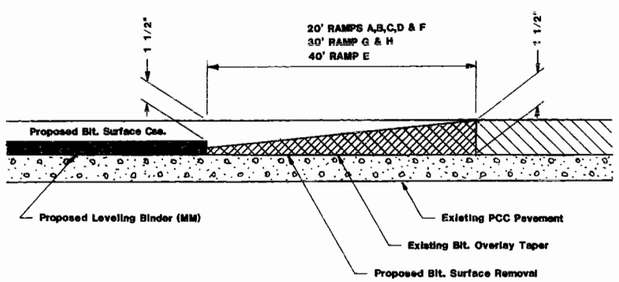

THICKNESS TAPERS AT RAMPS

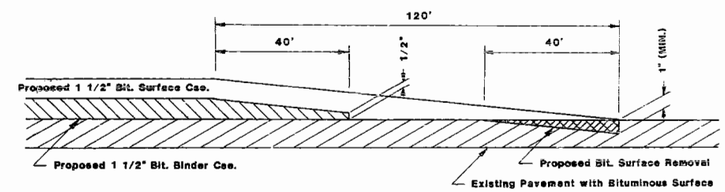

ENDING THICKNESS TAPER

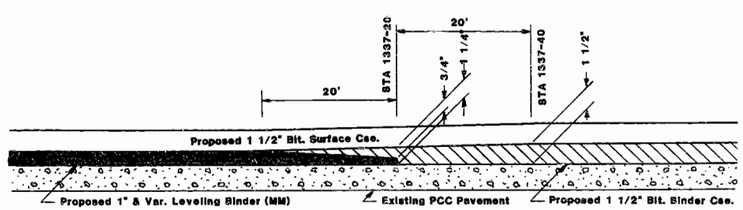

PROPOSED THICKNESS TAPER STA 1337+20

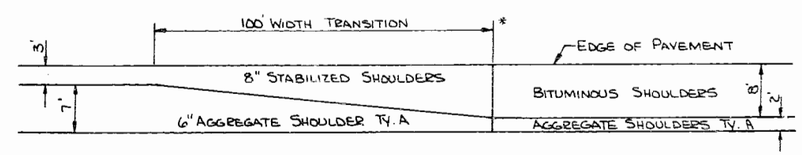

SHOULDER WIDTH TRANSITION DETAIL

* STA. 1298, 60' LT.
STA. 1298, 60' RT.
STA. 1319, 60' LT.
STA. 1324, 80' RT.

BITUMINOUS TAPER DETAILS

ROUTE	SECTION	COUNTY	TOTAL SHEETS	SHEET NUMBER
FAP 640 (ILL 50)	140 W&RS-3	KANKAKEE	134	91
STATE: ILL.	FED. 4	CONTROL	PROJECT	

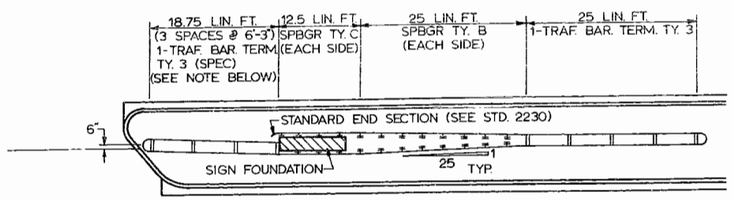

NOTE: THE TRAFFIC BARRIER TERMINAL TYPE 3 (SPECIAL) SHALL BE FABRICATED AND CONSTRUCTED IN ACCORDANCE WITH STANDARD 2338 EXCEPT FOR THE MODIFICATIONS AS SHOWN ABOVE.

GUARD RAIL APPLICATION FOR SIGN FOUNDATION

STA. 1317+17 (MEDIAN)

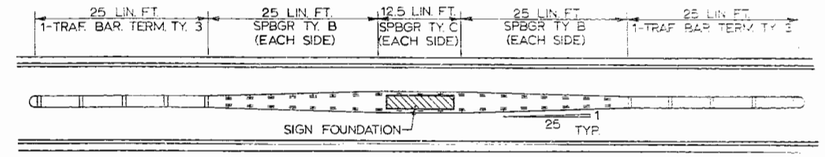

GUARD RAIL APPLICATION FOR SIGN FOUNDATION

STA. 1302+96 (MEDIAN)

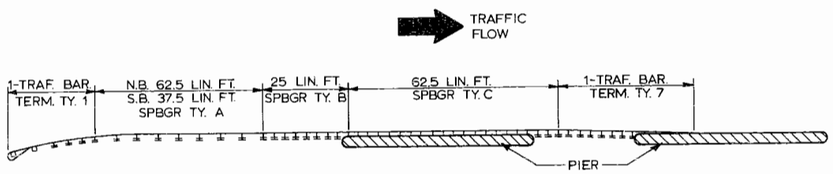

GUARD RAIL APPLICATION AT BRIDGE PIERS

STA. 1309±54 TO STA. 1311±69 (RT.) NORTHBOUND
STA. 1311± 44 TO STA. 1313±59 (LT.) SOUTHBOUND

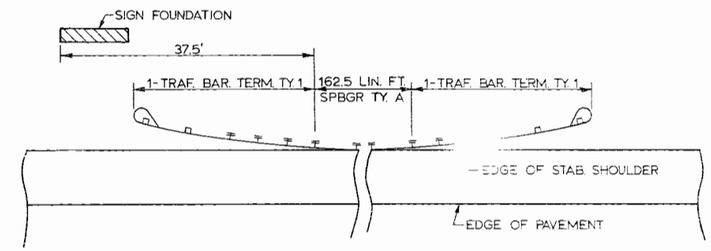

GUARD RAIL APPLICATION AT SIGN FOUNDATION

STA. 1317±17 (LT.)

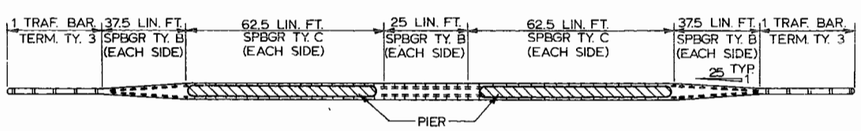

GUARD RAIL APPLICATION AT BRIDGE PIERS

STA. 1310±20 TO STA. 1312±95 (MEDIAN)

NOTES:

1. BRACKET IS TO BE FABRICATED FROM 12 GA. (MIN.) STEEL GALVANIZED IN ACCORDANCE WITH AASHTO M 111
2. INSTALL AT MAX. 50' INTERVALS ON TANGENT, INTERVALS ON CURVE MIN. 3 REFLECTORS PER SIDE.
3. BRACKET "FOOT" SHALL BE PLACED BETWEEN THE BOLT HEAD AND THE PLATE WASHER (IF PRESENT).
4. BRACKETS SHALL NOT BE PLACED WITHIN 25' OF THE END OF A BREAKAWAY CABLE TERMINAL (BCT) SECTION OR WITHIN AN EXPANSION SPLICE.

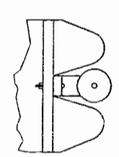

TYP. MOUNTING WITH REFLECTOR (CRYSTAL COLOR) (ON THRIE BEAM RAIL. THE BRACKETS SHALL BE ATTACHED TO THE UPPER SPLICE BOLTS.)

Mono-Directional reflectors to be used.

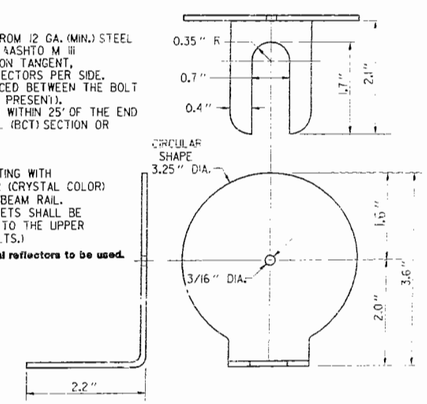

GUARD RAIL REFLECTOR BRACKET

GUARD RAIL DETAILS

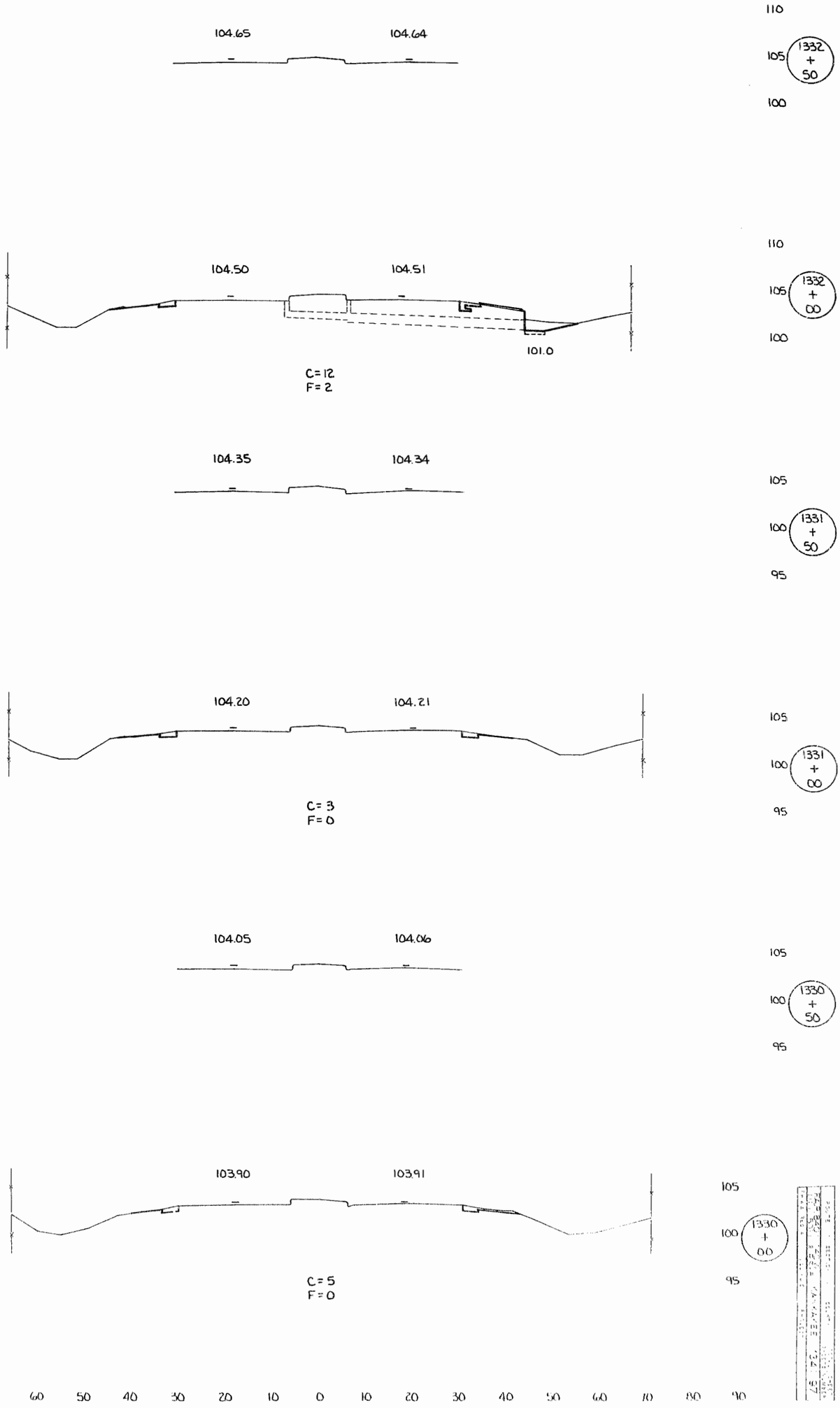

STA. 1330+00 TO STA. 1332+50