ROUTE NO	SECTION	COUNTY	TOTAL SHEETS	SHEET NO.
F.A.I. 80	81-1HB-1 81-1VB	ROCK ISLAND	44	14
FED. ROAD DIST. NO. 7	ILLINOIS	FED. AID PROJECT T-TA-95-1(59)		

SHEET NO. 14 SHEETS

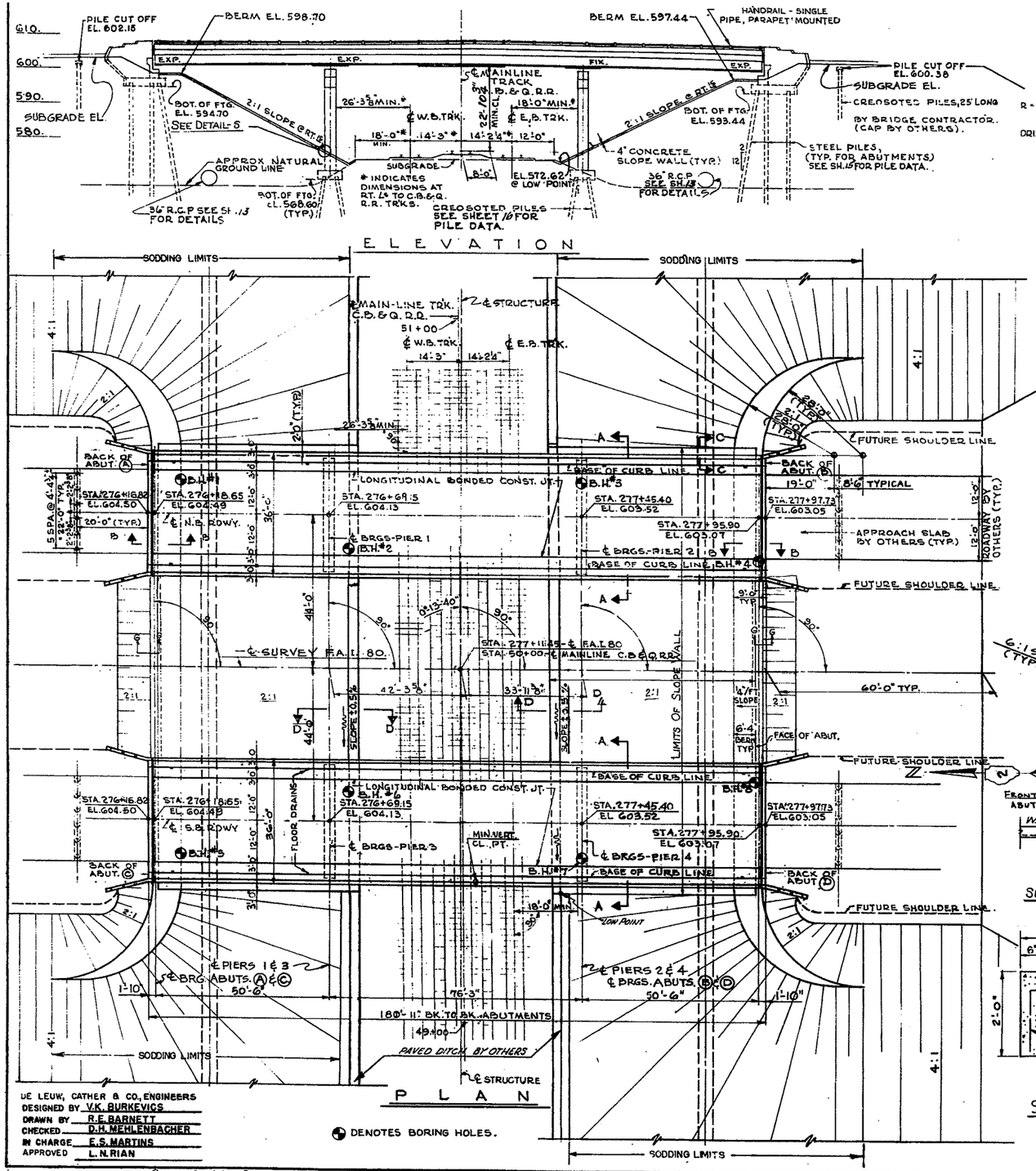

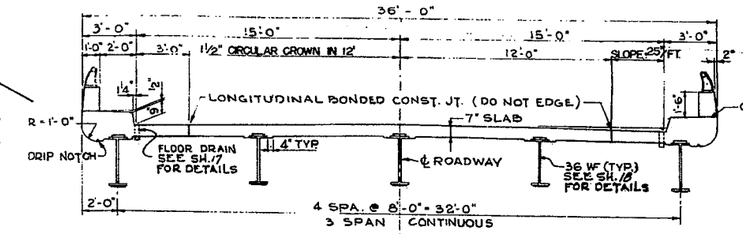

SECTION A-A

SCALE: ¼" = 1'-0"

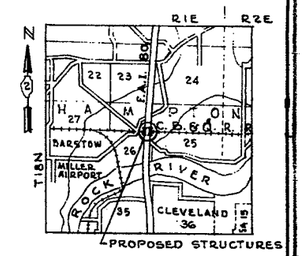

LOCATION PLAN

C.B.&Q. R.R. MILE POSTS

STA. 44+51 = M.P. 1

BARSTOW = M.P. 0

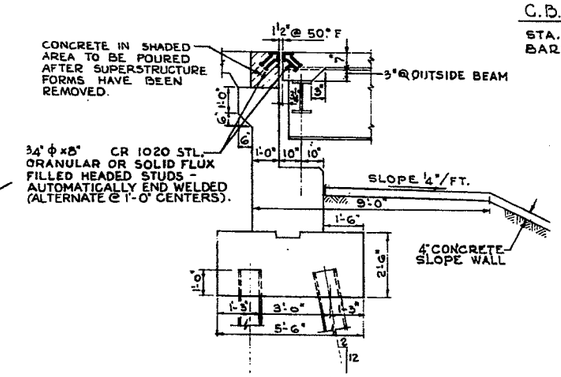

SECTION B-B

SCALE: ⅜" = 1'-0"

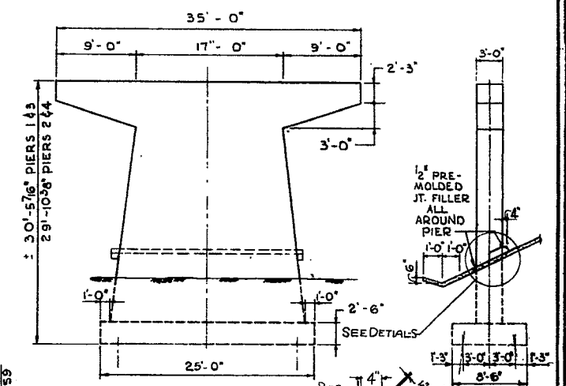

ELEVATION OF PIERS

SCALE: ⅛" = 1'-0"

END VIEW

DETAIL-S

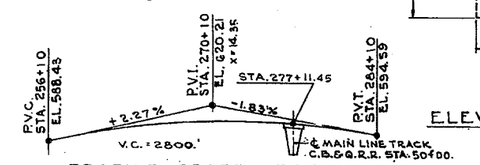

PROFILE GRADE F.A.I. 80.

SCALE HORIZ. 1" = 600'
VERT. 1" = 60'

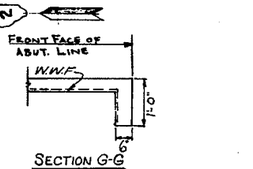

SECTION G-G

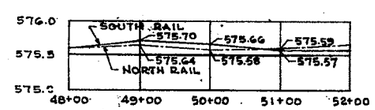

T/R WEST-BOUND TRACK

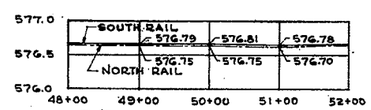

T/R MAIN LINE TRACK

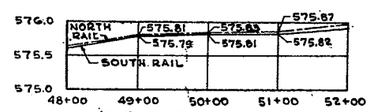

T/R EAST-BOUND TRACK

C.B.&Q. R.R. T/R PROFILE GRADES

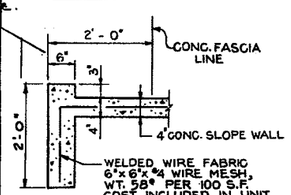

SECTION C-C

SCALE: ¾" = 1'-0"

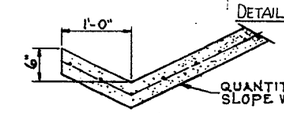

SECTION D-D

SCALE: 1" = 1'-0"

BILL OF MATERIAL

ITEM	UNIT	QUANTITY
* FURNISHING CREOSOTED PILES 20.1 TO 38 FEET	LIN FT	600
* DRIVING TIMBER PILES	LIN FT	600
SLOPE WALL 4 INCH	SQ YD	203.2
BRIDGE SEAT SEALANT **	LUMP SUM	0.5

* FOR APPROACH PILES ONLY

** APPLIED AT BOTH ABUTMENTS

DE LEUW, CATHER & CO., ENGINEERS
DESIGNED BY V.K. BURKEVICS
DRAWN BY R.E. BARNETT
CHECKED D.H. MEHLENBACHER
IN CHARGE E.S. MARTINS
APPROVED L.N. RIAN

JOB NO.

REV. 1-21-64: SLOPE WALL QUANT. 1240 TO 2032 SQ. YDS.

GENERAL PLAN & ELEVATION

F.A.I. 80 SECTION 81-1VB

F.A.I. 80 OVER C.B. & Q.R.R.

ROCK ISLAND COUNTY

STATION 277+11.45

SCALE: AS NOTED DATE:

SN 081-0014E-0015