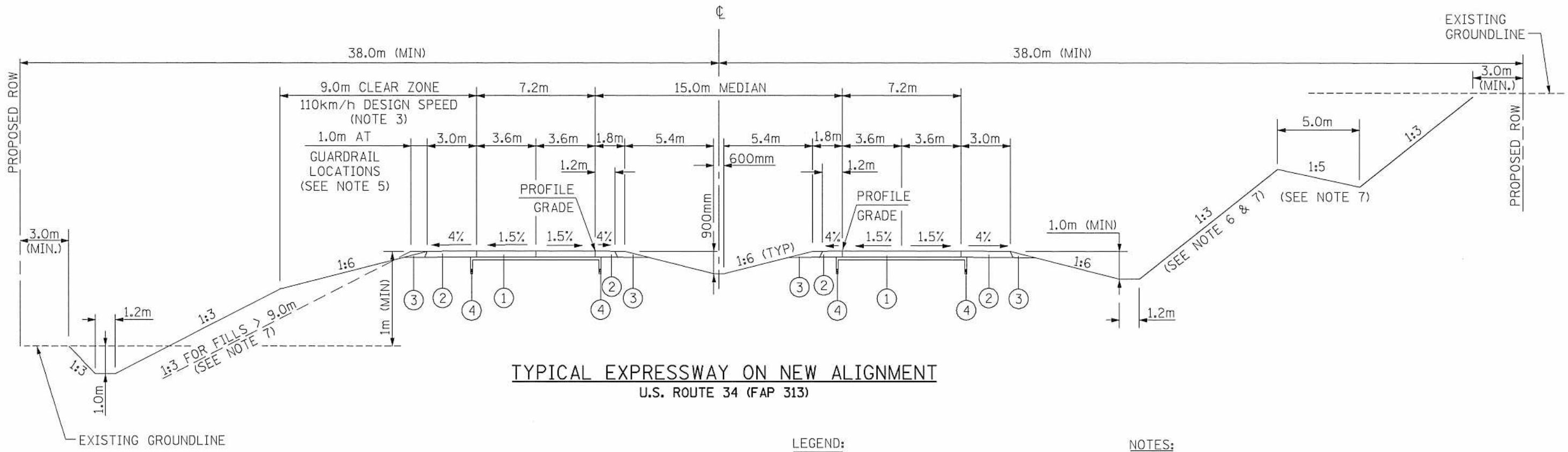

TYPICAL EXPRESSWAY ON NEW ALIGNMENT

U.S. ROUTE 34 (FAP 313)

LEGEND:

1. HIGH TYPE PAVEMENT WITH STABILIZED SUBBASE IF REQUIRED
2. HIGH TYPE SHOULDER PAVEMENT
3. AGGREGATE SHOULDER TYPE B
4. 100 mm PIPE UNDERDRAIN

NOTES:

1. SUPERELEVATION SHALL BE ATTAINED BY ROTATING THE PAVEMENT ABOUT THE MEDIAN EDGE OF PAVEMENT.
2. USE WIDER DITCH WIDTHS WHERE POSSIBLE TO REDUCE REQUIRED BORROW.
3. CLEAR ZONE WIDTH ON HORIZONTAL CURVES TO BE DETERMINED FROM SECTION 38-3 OF THE IDOT DESIGN MANUAL.
4. ROADWAY FILL SHOULD BE CONSTRUCTED A MINIMUM OF 1.0m ABOVE SURROUNDING GROUND LINE.
5. REFER TO CURRENT STANDARDS AND DETAILS FOR STABILIZATION AT GUARDRAIL LOCATIONS.
6. FOR CUTS GREATER THAN 3m A COST-EFFECTIVE STUDY IS RECOMMENDED TO DETERMINE WHETHER A 1:2 BACKSLOPE SHOULD BE USED BEYOND THE CLEAR ZONE.
7. WHEN THE HEIGHT OF CUT OR FILL EXCEEDS 9.0m PROVIDE BENCHING EVERY 4.5m VERTICALLY AND USE 1:3 SLOPES AS SHOWN.

Harding ESE A MACTEC Company	Illinois Department of Transportation	U.S. ROUTE 34 (GULFPORT TO MONMOUTH, IL) HENDERSON & WARREN COUNTIES TYPICAL SECTIONS	EXHIBIT B - 1

...\5396074\cadd\gpk\typsec01.sht Mar. 05, 2002 14:51:14

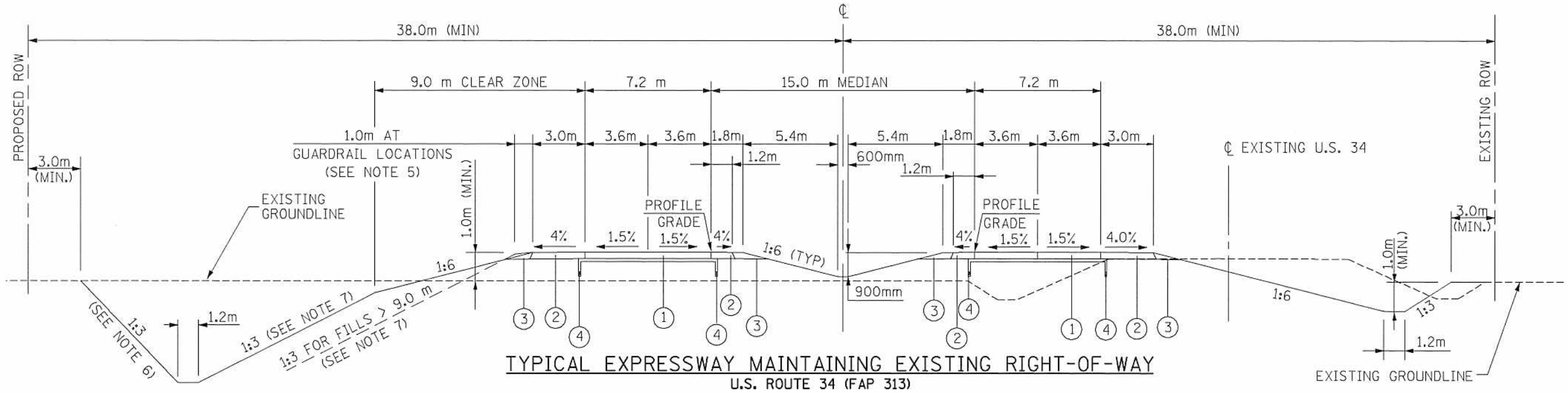

TYPICAL EXPRESSWAY MAINTAINING EXISTING RIGHT-OF-WAY

U.S. ROUTE 34 (FAP 313)

LEGEND:

1. HIGH TYPE PAVEMENT WITH STABILIZED SUBBASE IF REQUIRED
2. HIGH TYPE SHOULDER PAVEMENT
3. AGGREGATE SHOULDER TYPE B
4. 100 mm PIPE UNDERDRAIN

NOTES:

1. SUPERELEVATION SHALL BE ATTAINED BY ROTATING THE PAVEMENT ABOUT THE MEDIAN EDGE OF PAVEMENT.
2. USE WIDER DITCH WIDTHS WHERE POSSIBLE TO REDUCE REQUIRED BORROW.
3. CLEAR ZONE WIDTH ON HORIZONTAL CURVES TO BE DETERMINED FROM SECTION 38-3 OF THE IDOT DESIGN MANUAL.
4. ROADWAY FILL SHOULD BE CONSTRUCTED A MINIMUM OF 1.0m ABOVE SURROUNDING GROUND LINE.
5. REFER TO CURRENT STANDARDS AND DETAILS FOR STABILIZATION AT GUARDRAIL LOCATIONS.
6. FOR CUTS GREATER THAN 3m A COST-EFFECTIVE STUDY IS RECOMMENDED TO DETERMINE WHETHER A 1:2 BACKSLOPE SHOULD BE USED BEYOND THE CLEAR ZONE.
7. WHEN THE HEIGHT OF CUT OR FILL EXCEEDS 9.0m PROVIDE BENCHING AS SHOWN ON EXHIBIT B-1

Harding ESE A MACTEC Company	Illinois Department of Transportation	U.S. ROUTE 34 (GULFPORT TO MONMOUTH, IL) HENDERSON & WARREN COUNTIES TYPICAL SECTIONS	EXHIBIT B - 2

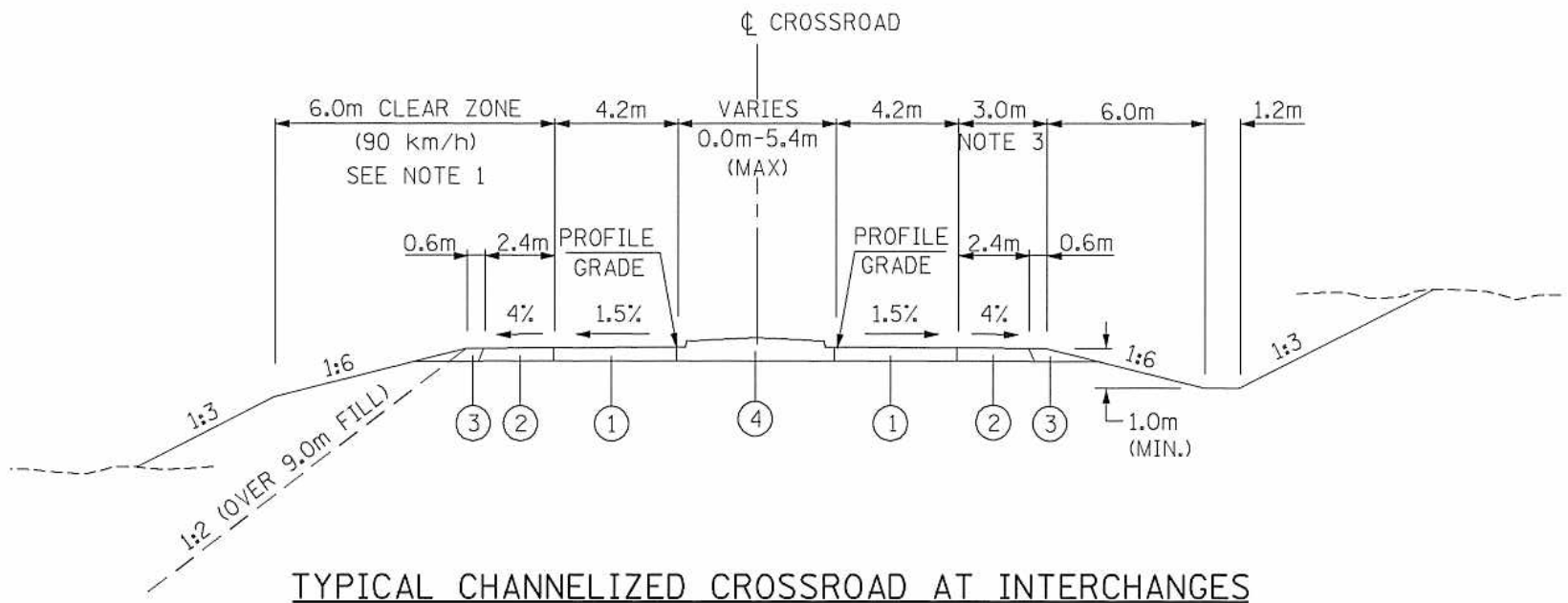

TYPICAL CHANNELIZED CROSSROAD AT INTERCHANGES

NOTES:

1. CLEAR ZONE WIDTH ON HORIZONTAL CURVES TO BE DETERMINED FROM SECTION 38-3 OF THE IDOT DESIGN MANUAL.
2. USE WIDER DITCH WIDTH WHERE POSSIBLE TO REDUCE REQUIRED BORROW.
3. ENTIRE 3.0 m SHOULDER TO HAVE FULL DEPTH SHOULDER PAVEMENT BETWEEN RAMP TERMINALS AND BRIDGE.

LEGEND:

(1) HIGH TYPE PAVEMENT

(2) HIGH TYPE SHOULDER PAVEMENT

(3) AGGREGATE SHOULDER TYPE B

(4) CONCRETE MEDIAN WITH COMBINATION CONCRETE CURB & GUTTER TYPE M-10.15

(5) 100 mm PIPE UNDERDRAIN

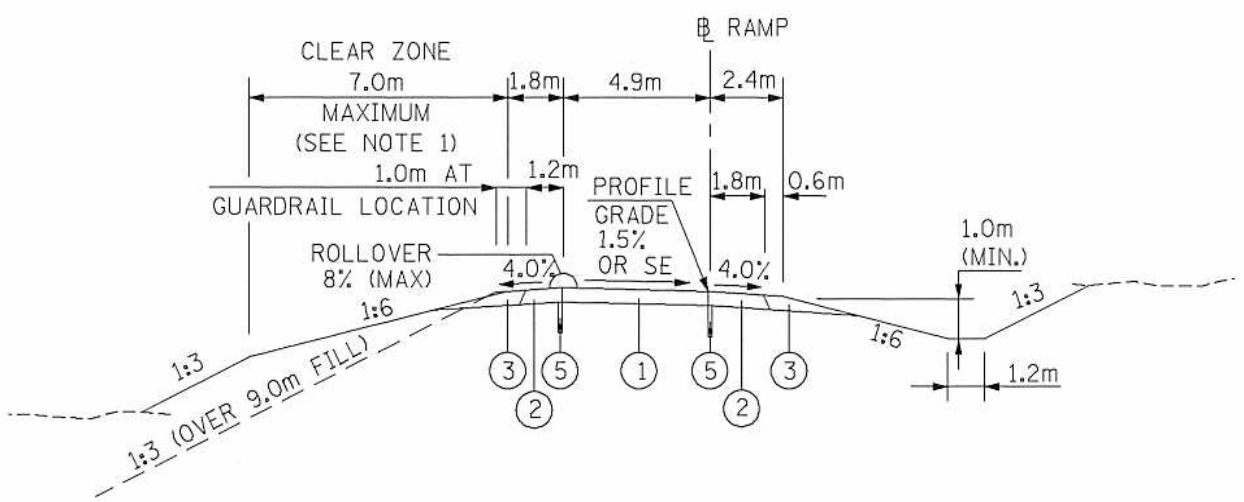

TYPICAL CROSS SECTION FOR RAMPS

Harding ESE
A MACTEC Company

Illinois Department of Transportation

U.S. ROUTE 34 (GULFPORT TO MONMOUTH, IL)
HENDERSON & WARREN COUNTIES
TYPICAL SECTIONS

EXHIBIT
B - 3

...\5396074\cadd\gpk\typsec03.sht Mar. 05, 2002 14:52:12

NOTES:

1. FOR FILL HEIGHTS GREATER THAN 3m , USE 1:2 SLOPE.
2. MAINTAIN U.S. 34 SLOPES AROUND RADIUS WITHIN CLEAR ZONE, THEN TAPER BACKSLOPES/FORESLOPES TO EXISTING.

LEGEND:

(1) BITUMINOUS SURFACE COURSE

(2) AGGREGATE BASE COURSE

(3) AGGREGATE SHOULDER

TRANSITION TO EXISTING ROADWAY WIDTH BEYOND IMPROVEMENT LIMITS

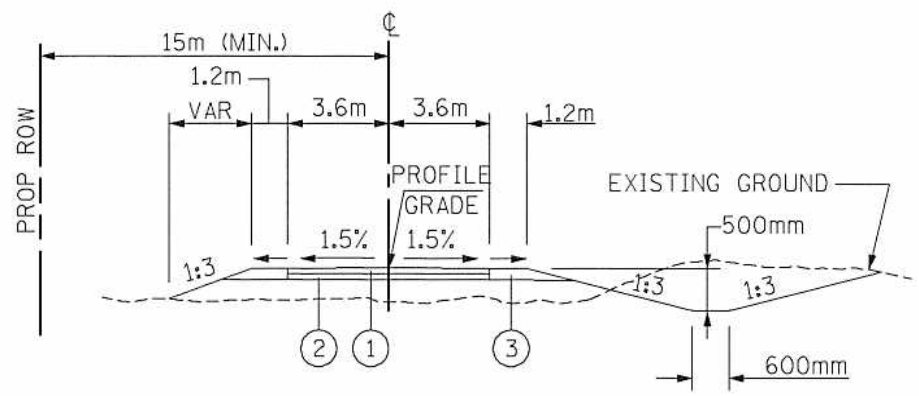

TYPICAL CROSSROAD

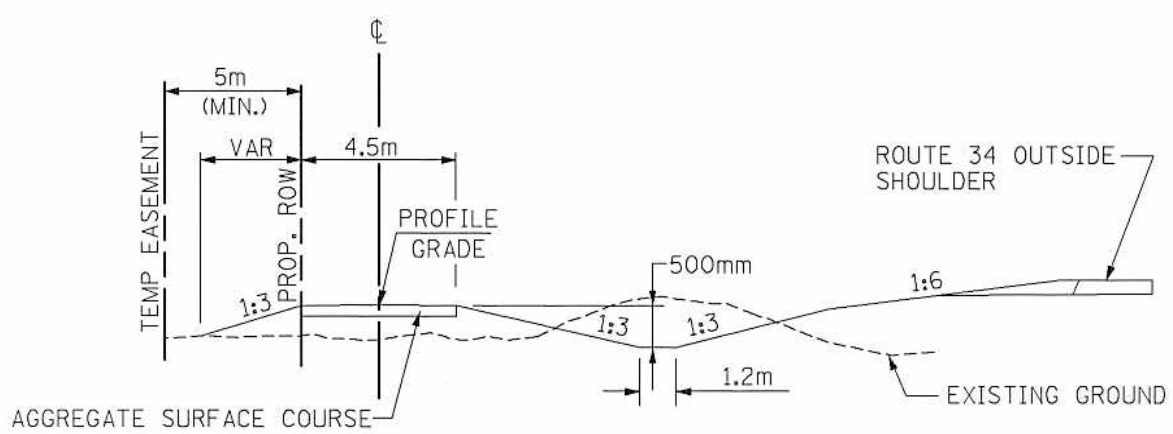

TYPICAL SERVICE DRIVE

(PARALLEL TO MAINLINE)

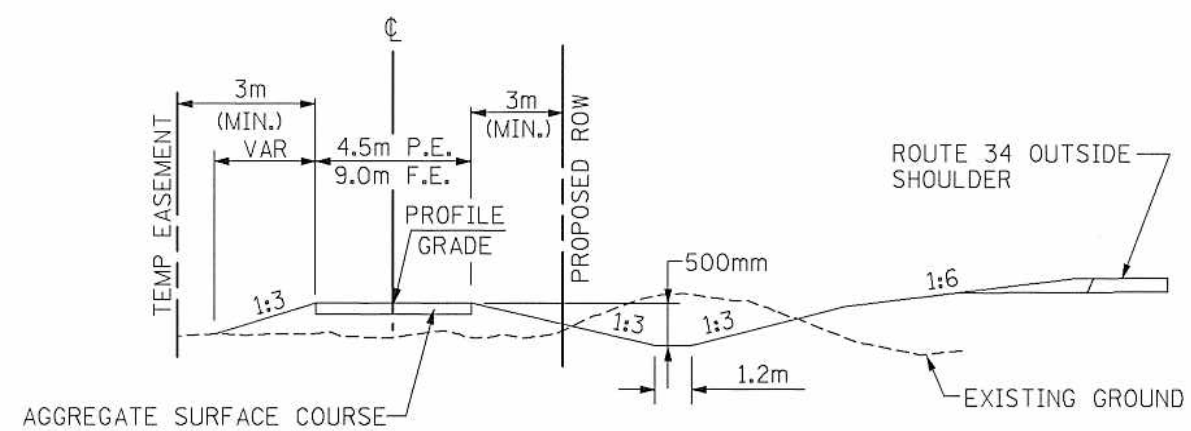

TYPICAL PRIVATE OR FIELD ENTRANCE

(PARALLEL TO MAINLINE)

Harding ESE A MACTEC Company	Illinois Department of Transportation	U.S. ROUTE 34 (GULFPORT TO MONMOUTH, IL) HENDERSON & WARREN COUNTIES TYPICAL SECTIONS	EXHIBIT B - 4

...\5396074\cadd\gpk\typsec04.sht Mar. 05, 2002 14:52:35

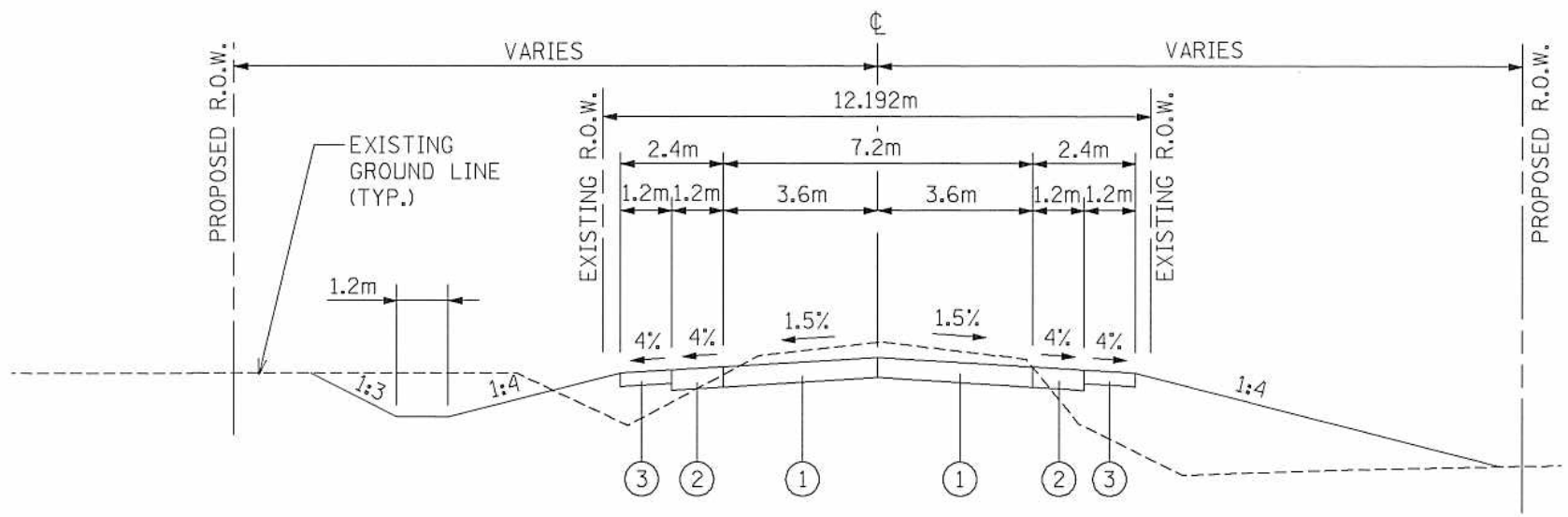

PROPOSED UPGRADED TR 150

LEGEND:

1. HIGH TYPE PAVEMENT
2. HIGH TYPE SHOULDER PAVEMENT
3. AGGREGATE SHOULDER TYPE B

Harding ESE A MACTEC Company	Illinois Department of Transportation	U.S. ROUTE 34 (GULFPORT TO MONMOUTH, IL) HENDERSON & WARREN COUNTIES TYPICAL SECTION	EXHIBIT B - 5

...\5396074\cadd\gpk\typsec05.sht Mar. 06, 2002 16:41:47

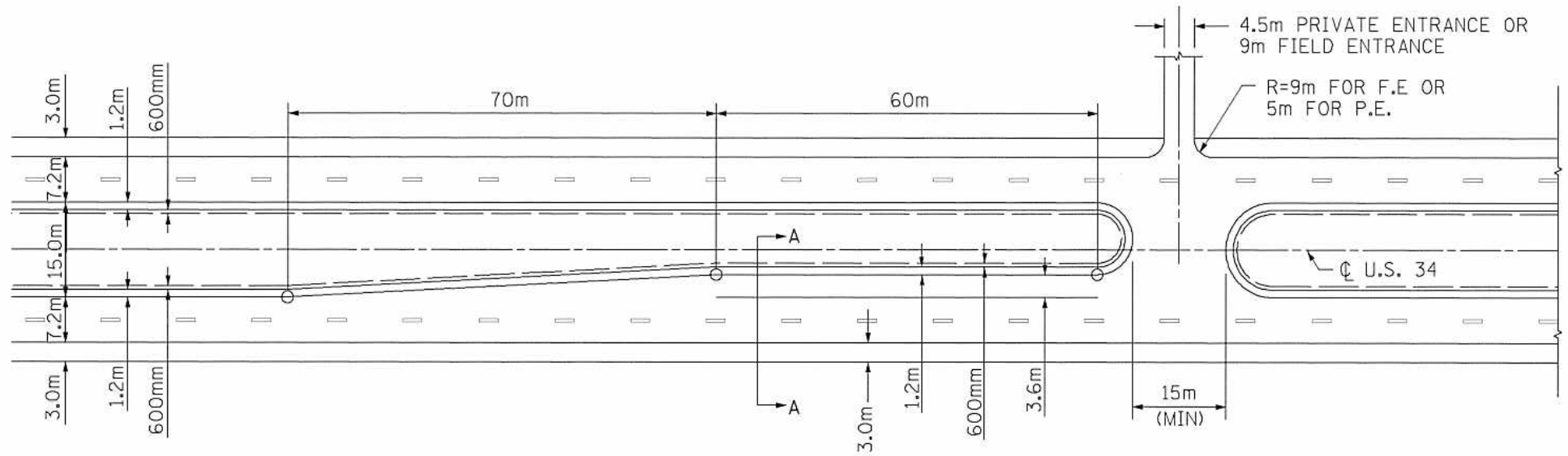

DETAIL OF LEFT TURN LANE AT MEDIAN CROSSOVER
(NO INTERSECTING ROADWAY)

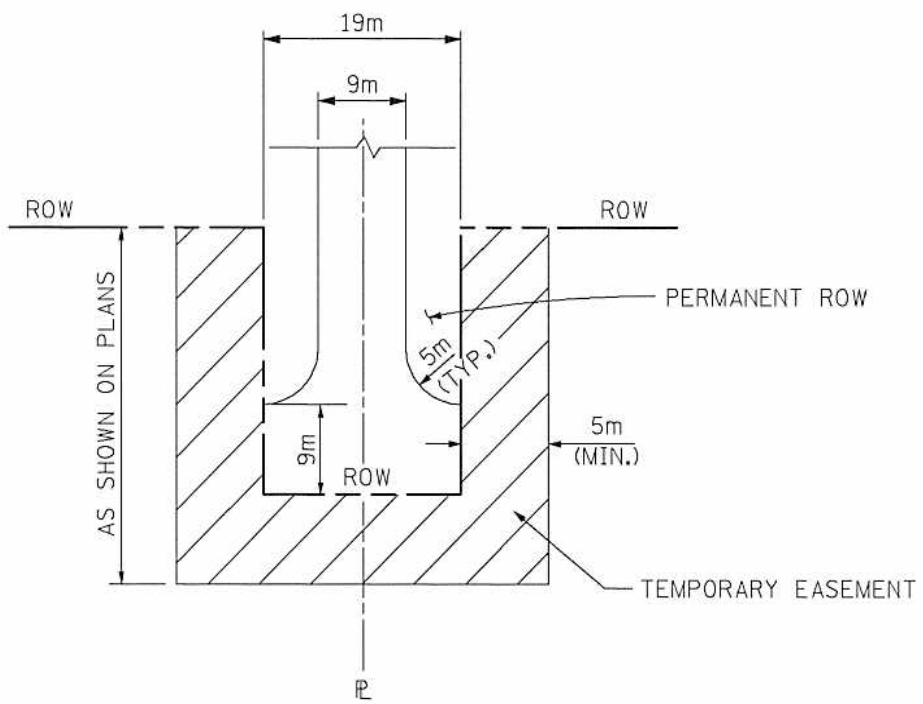

TEMPORARY EASEMENT FOR
SHARED ENTRANCE

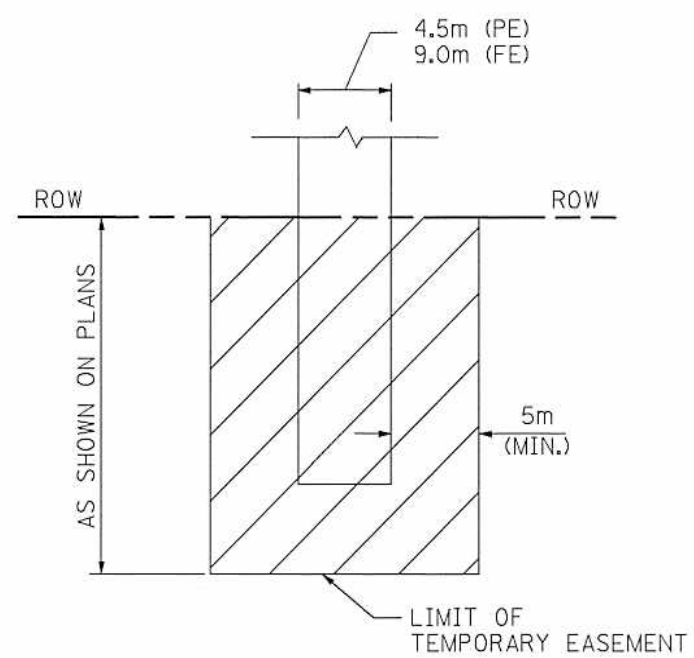

TEMPORARY EASEMENT FOR PRIVATE
ENTRANCES AND FIELD ENTRANCES

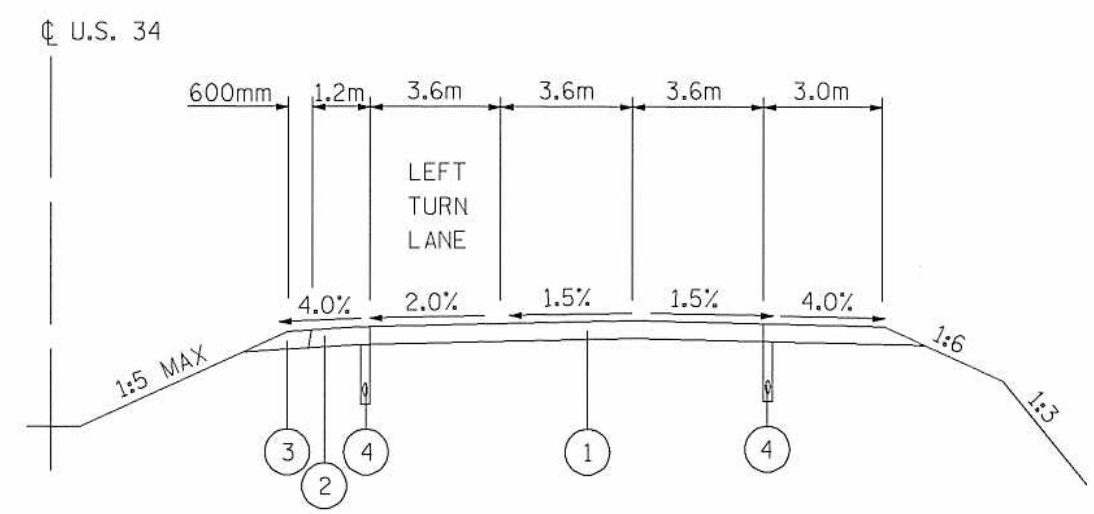

SECTION A-A

LEGEND:

1. HIGH TYPE PAVEMENT
2. HIGH TYPE SHOULDER PAVEMENT
3. AGGREGATE SHOULDER TYPE B
4. 100 mm PIPE UNDERDRAIN

Harding ESE A MACTEC Company	Illinois Department of Transportation	U.S. ROUTE 34 (GULFPORT TO MONMOUTH, IL) HENDERSON & WARREN COUNTIES TYPICAL SECTIONS	EXHIBIT B - 6

...\5396074\cadd\gpk\typsec06.sht Mar. 05, 2002 14:53:43

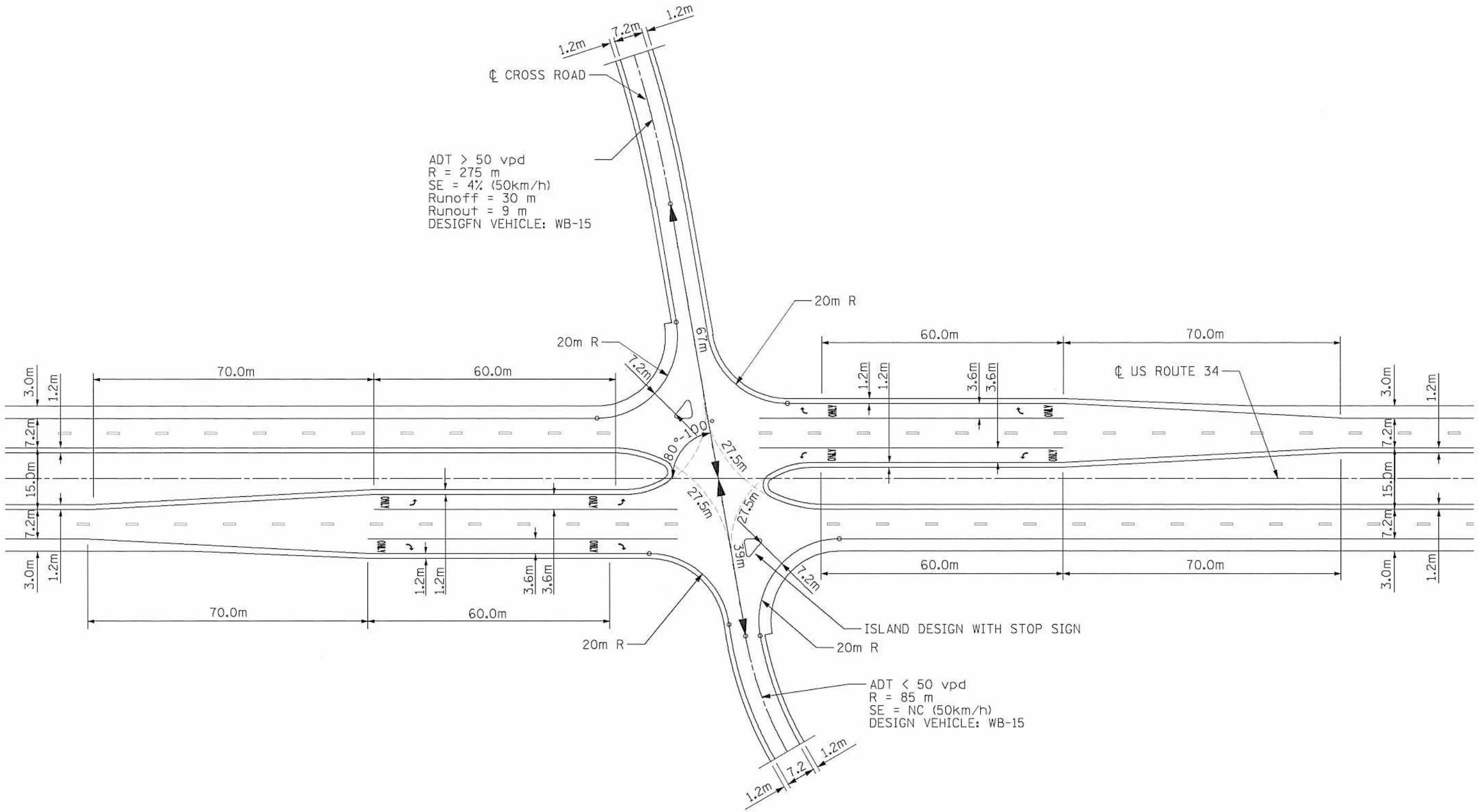

MINOR RURAL INTERSECTION

NOTE: RIGHT AND LEFT TURN LANE DECELERATION LENGTHS BASED ON DESIGN SPEED OF 80 km/h PER SECTION 36-3.02(b)2.b. OF THE IDOT DESIGN MANUAL.

Harding ESE A MACTEC Company	Illinois Department of Transportation	U.S. ROUTE 34 (GULFPORT TO MONMOUTH, IL) HENDERSON & WARREN COUNTIES TYPICAL SECTIONS	EXHIBIT B - 7

...\5396074\cadd\gpk\typsec07.sht Mar. 05, 2002 14:54:22