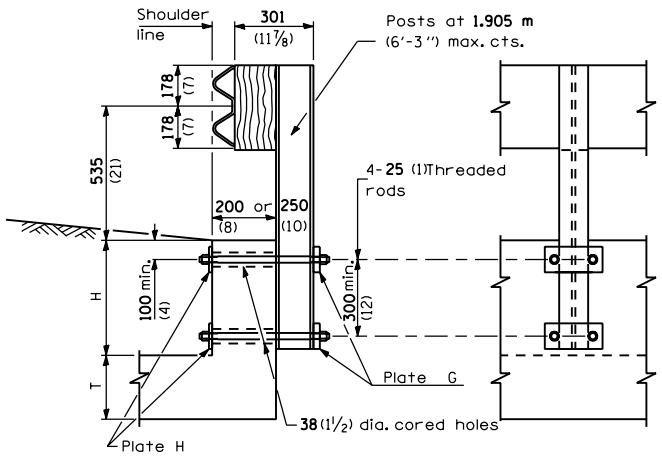

CROSS SECTION ELEVATION

CONDITION H > 450 (18)

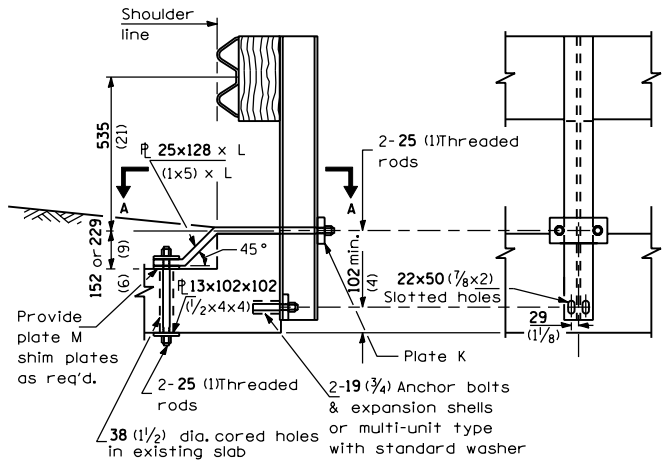

CROSS SECTION ELEVATION

CASE II
MOUNTED ON TOP HEADWALL
WITH SQUARE TIP

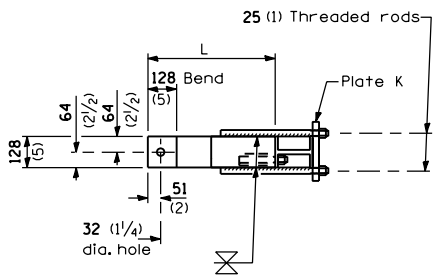

SECTION A-A

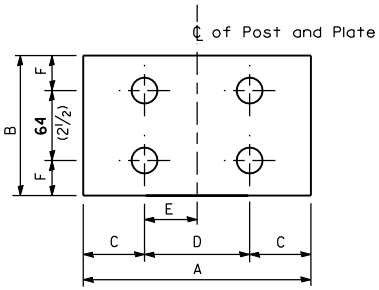

PLATE TYPE J

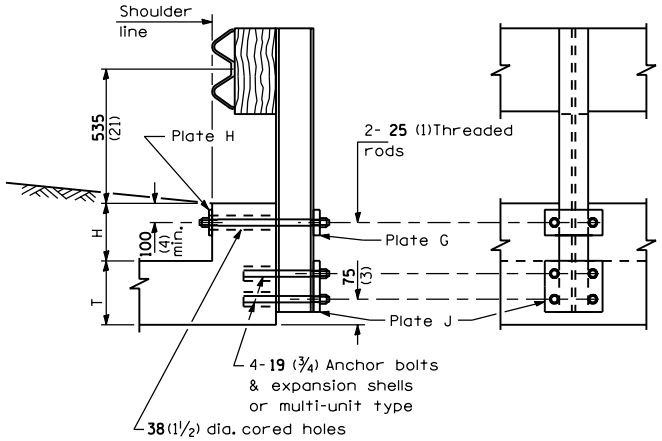

CROSS SECTION ELEVATION

CONDITION H < 450 (18) & H+T ≥ 510 (20)

CASE I
MOUNTED ON
RAISED HEADWALL

PLATE DIMENSIONS								
Type	A	B	C	D	E	F	Hole Dia.	Thick-ness
G	230 (9)	100 (4)	40 (1 1/2)	150 (6)	75 (3)	50 (2)	29 (1 1/8)	25 (1)
H	230 (9)	100 (4)	40 (1 1/2)	150 (6)	75 (3)	50 (2)	29 (1 1/8)	13 (1/2)
J	230 (9)	126 (5)	40 (1 1/2)	150 (6)	75 (3)	31 (1 1/4)	22 (7/8)	25 (1)
K	230 (9)	100 (4)	40 (1 1/2)	150 (6)	75 (3)	50 (2)	29 (1 1/8)	32 (1 1/4)
M	100 (4)	100 (4)	50 (2)	N/A	N/A	50 (2)	32 (1 1/8)	13 (1/2)

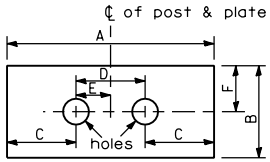

PLATE TYPES G, H & K

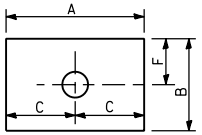

PLATE TYPE M

GENERAL NOTES

Except as noted, dimensions and notes specified for case II, III, and IV are the same as specified for case I.

For details of guardrail elements not shown, see Standard 630001.

All threaded rods shall be installed with heavy hex nuts and standard washers.

All dimensions are in millimeters (inches) unless otherwise shown.

Illinois Department of Transportation

PASSED January 1, 2003
Roger Driskell
ENGINEER OF POLICY AND PROCEDURES

APPROVED January 1, 2003
Michael J. Hine
ENGINEER OF DESIGN AND ENVIRONMENT

ISSUED 1-1-97

DATE	REVISIONS
1-1-03	Revised gusset
	dimension on case IV
	cross section.
1-1-02	Revised 22 (7/8) anchor
	bolts to 19 (3/4) in
	CONDITION H < 450 (18).

GUARDRAIL MOUNTED ON EXISTING CULVERTS

(Sheet 1 of 2)

STANDARD 630101-04

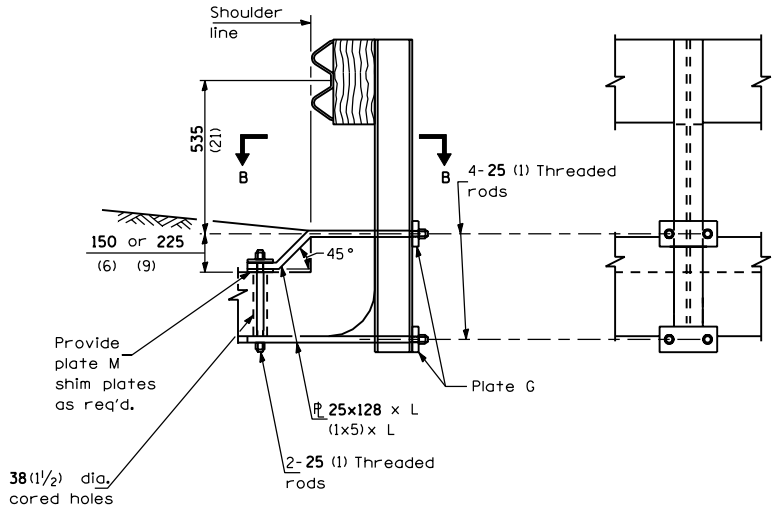

CROSS SECTION

ELEVATION

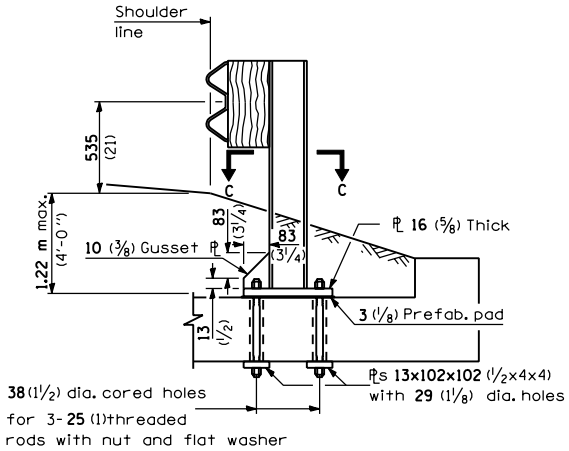

CROSS SECTION

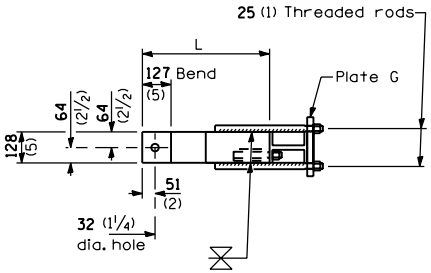

SECTION B-B

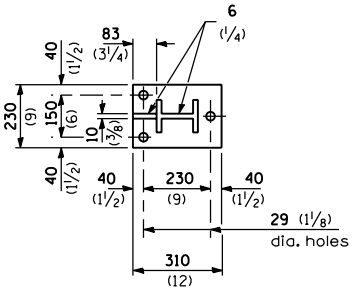

SECTION C-C

CASE III
MOUNTED ON HEADWALL
WITH CURVED OR
DEMOLISHED TIP

CASE IV
MOUNTED ON SLAB

All dimensions are in millimeters (inches) unless otherwise shown.

Illinois Department of Transportation

PASSED January 1, 2003
Roger Driskell
ENGINEER OF POLICY AND PROCEDURES

APPROVED January 1, 2003
Michael J. Hine
ENGINEER OF DESIGN AND ENVIRONMENT

ISSUED 1-1-97

GUARDRAIL MOUNTED ON EXISTING CULVERTS

(Sheet 2 of 2)

STANDARD 630101-04